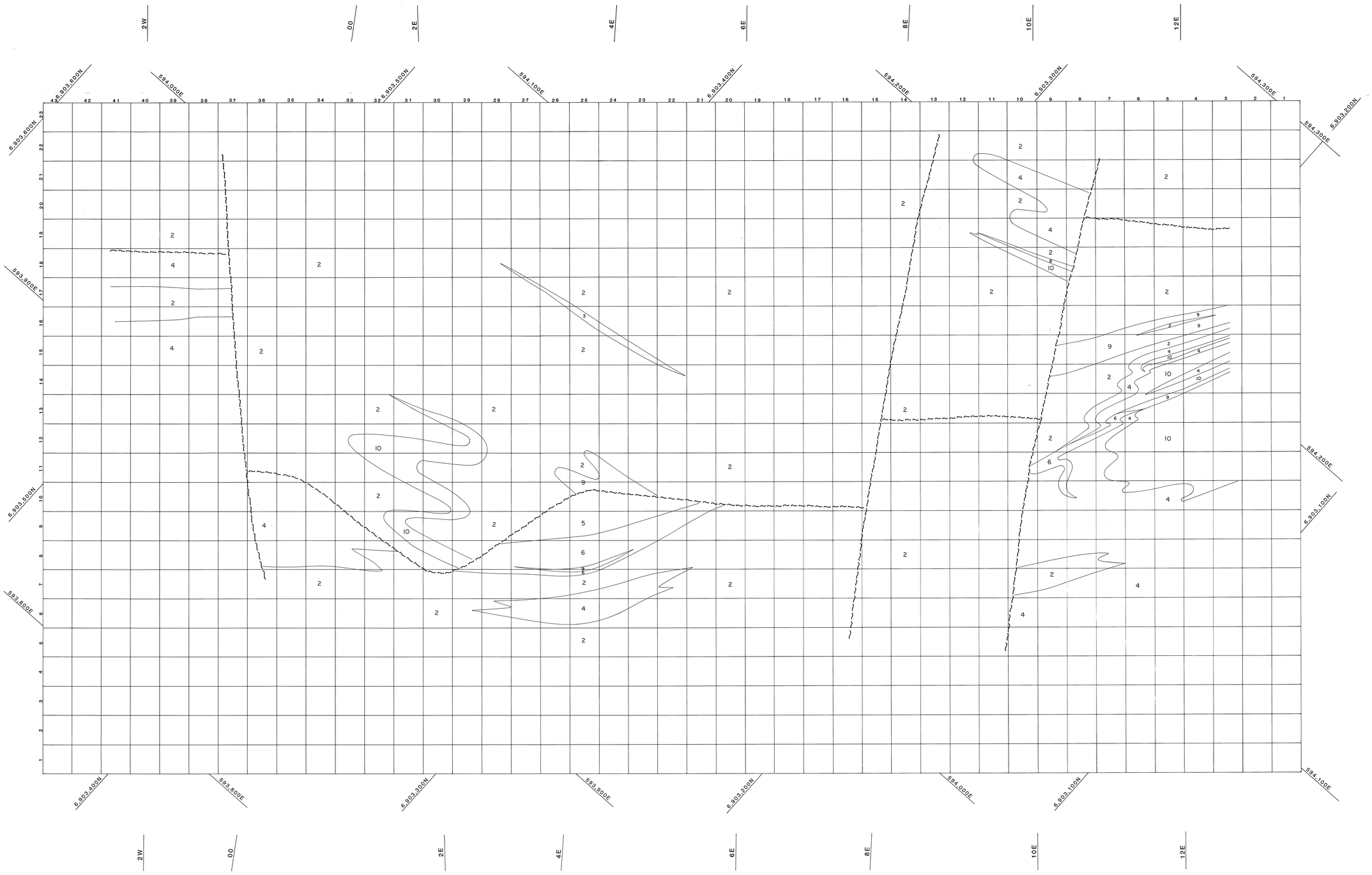

LEGEND

1	overburden	6	4EFHJK
2	5B-4L	7	4GE
3	5D	8	4CE
4	5A	9	4BCD
5	4G	10	4A

YUKON GEOLOGICAL SURVEY

This reference scale has been added to the original plan. Grids and other details may differ from those on the Centre and as a reference of the original size.

CYPRUS ANVIL MINING CORPORATION

VANGORDA DEPOSIT

YUKON TERRITORY

GEOLOGY

BENCH PLAN 1028m

1:500

0 5 10 20 30 40 50 60 metres

NTS 105-K-3,6

SURVEY BY:

DRAWN BY: C.L.C.

DATE: 011473