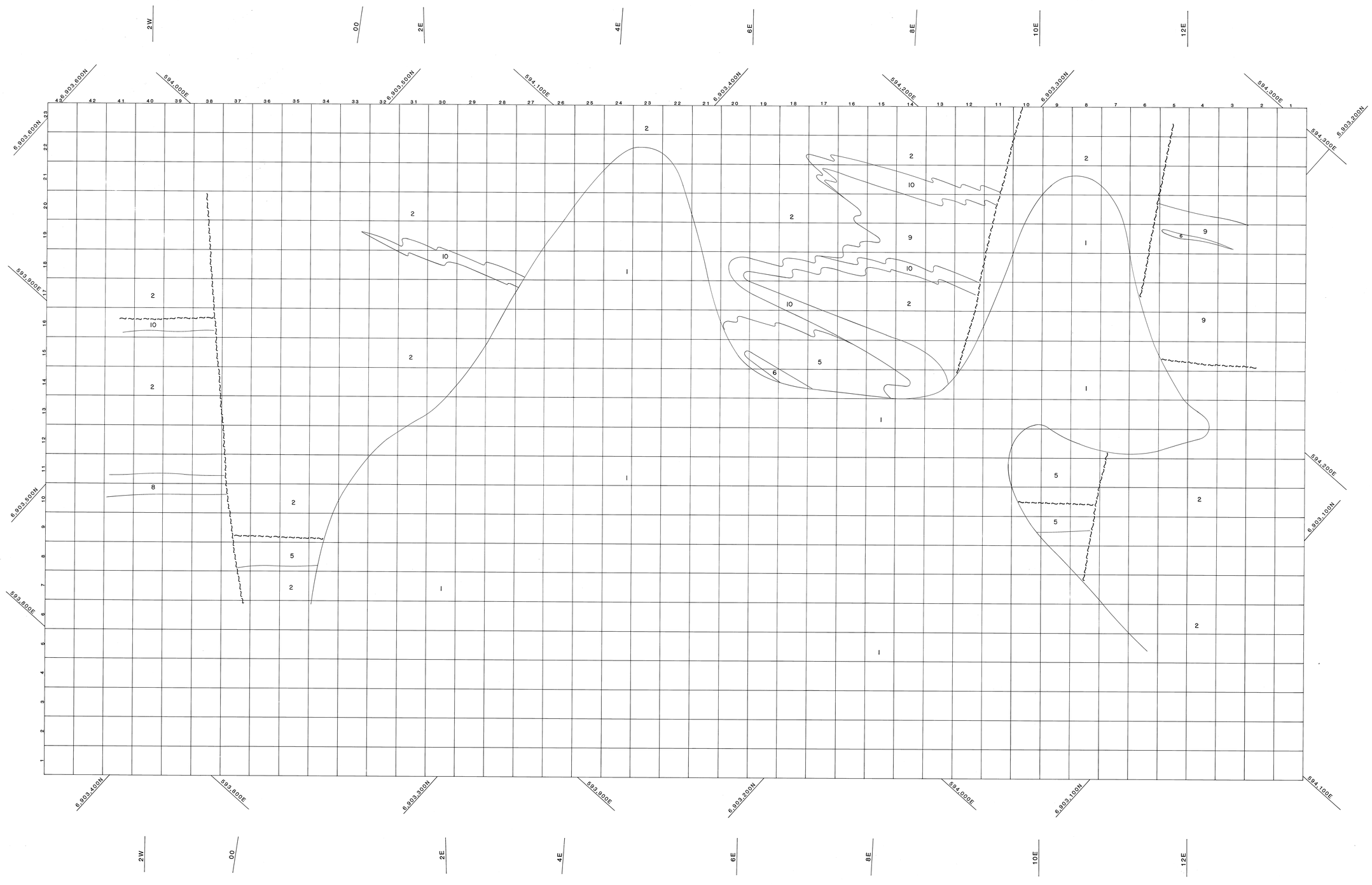

LEGEND

1	overburden	6	4EFHJK
2	5B-4L	7	4GE
3	5D	8	4CE
4	5A	9	4BCD
5	4G	10	4A

CYPRUS ANVIL MINING CORPORATION

VANGORDA DEPOSIT

YUKON TERRITORY

GEOLOGY

BENCH PLAN 1124m

1:500

0 5 10 20 30 40 50 60 metres

N.T.S. 105-K-3,6
SURVEY BY:
DRAWN BY: V.f.

DATE:

011483

Yukon Geological Survey

The reference scale bar has been added to the original image. It will scale properly with the image dimensions if the image has not been altered from the original size.