Cyprus Anvil
Mining Corporation

Post Office Box 1000
Faro, Yukon Territory
Canada Y0B 1K0

015026

1979 1980 & 1981

VANGORDA DDH LOGS

(ORIGINALS)

CYPRUS ANVIL

INDEX OF DRILL HOLES

BY SECTION

SECTION	DRILL HOLE
2W	V 313
	V 314
	V 319
	V 28 R
	V 30 R
00	V 315
	V 316
	V 01 R
	V 26 R
	V 27 R
	V 143 R
2E	V 300
	V 311
	V 318
	V 321
4E	V 304
	V 305
	V 306
	V 307
	V 308
	V 310
	V 33 R
6E	V 20 R
	V 35 R
	V 47 R
	V 94 R
	V 95 R
	V 96 R
	V 126 R
8E	V 302
	V 303
	V 317
	V 320
	V 18 R
	V 45 R
	V 53 R
10E	V 46 R
	V 50 R
	V 60 R
	V 110 R
	V 114 R
	V 117 R
	V 123 R
12E	V 309
	V 312
	V 322
	V 49 R
	V 57 R
	V 63 R
18E	V 301
	V 71 R
	V 72 R
20E	V 75 RH

SECTION	DRILL HOLE
26E	V 55 R
	V 84 R
	V 101 R
	V 055 RH
	V 118 R
DUMP HOLES	76 1
	79 VX 1
	79 VX 2
	80 VX 1
	V 158
	V 159

81 VX 01

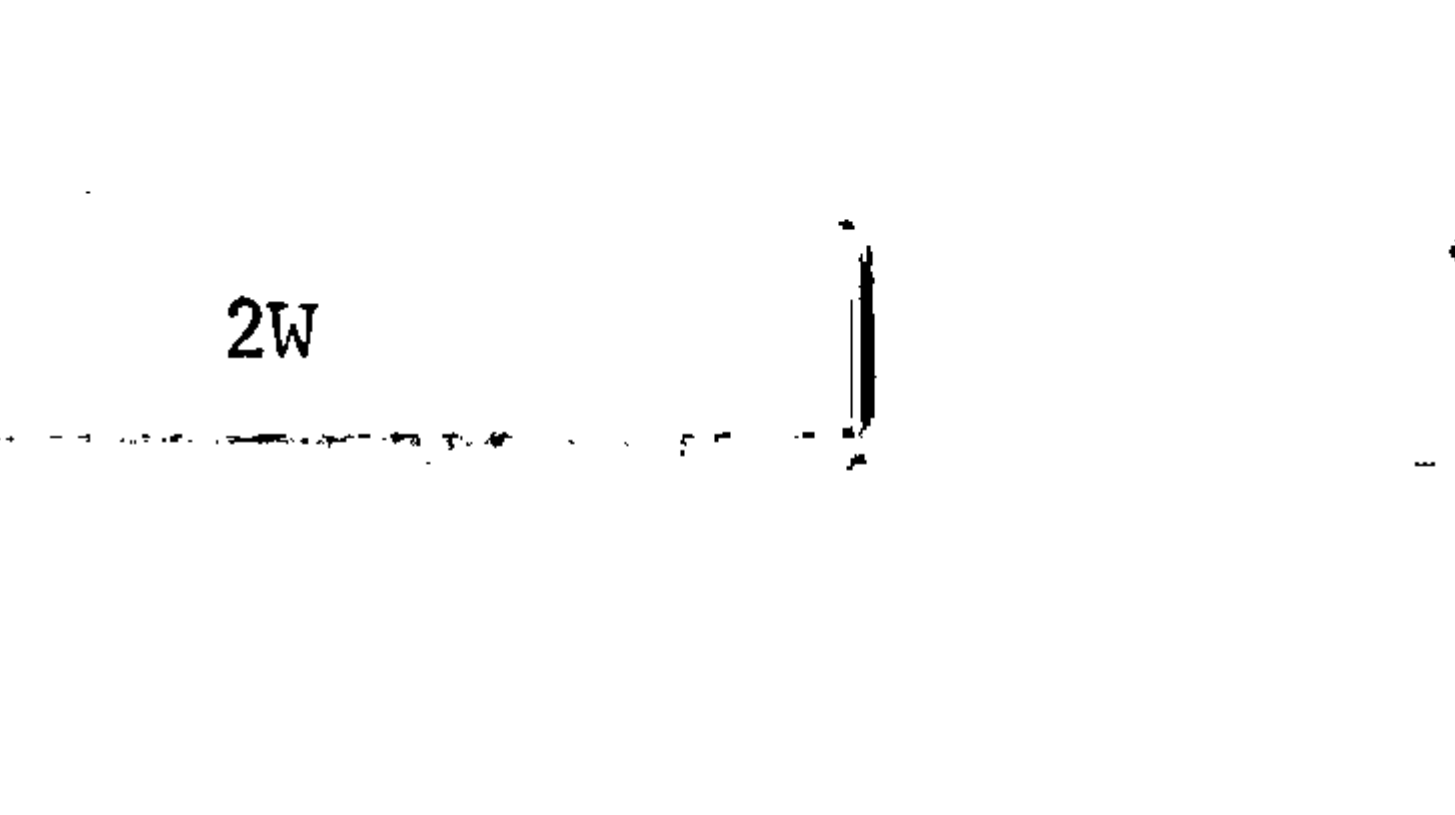
2W

CYPRUS ANVIL MINING CORPORATION

DIAMOND DRILL CORE LOG

Hole Number: V-313

Project: VANGORDA

Location: VANGORDA PLATEAU

Claim: _____

Terr. Plane Co-ords.: _____ N

_____ E

Grid Co-ords.: _____

_____

Elevation: _____

Total Depth: 356.0'

Fabric Orientation Diagram:

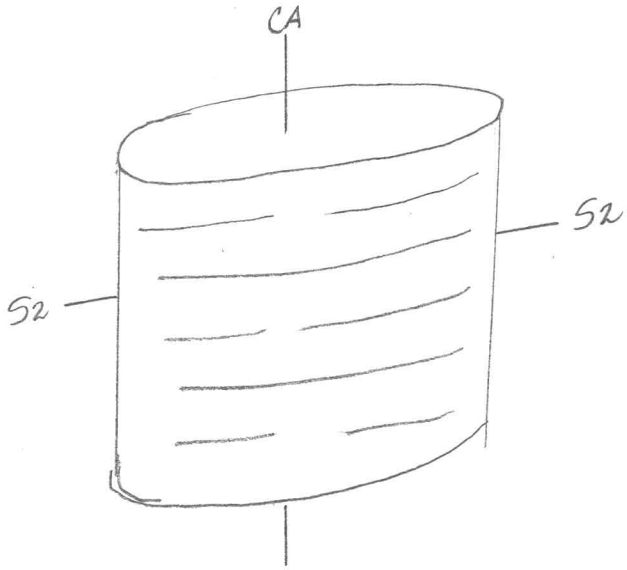

All symmetry determinations looking

N.W. with S2 dipping

S.W. with dip azimuth 220.

Purpose: _____

Logged by: D.J.H. Date(s) Logged: _____

Drilling Contractor: A.D.D.

Core:

Size	From	To
N.Q.	69.0'	356.0'

Collar Cased and Capped: ____

Started: _____ Completed: _____

Cyprus Anvil Mining Corp.
Diamond Drill Core Log

DDH V-313
SECT 2W

Code	Drillhole	Elevation	Northing	Easting	Comments
1	2 8	10 16	17 24	25 32	34 48
T	V-313	11148.19	9035051.1	5939111.5	FEET

Code	Drillhole	Depth		Zenith Angle		True Azimuth		Comments
1	2 8	10	14	22	26	28	32	34 56
R	V-313	0	0	180.		.		AT COLLAR
R	V-313	1380	0	178.0		039.0		ACID ZEN=179° @122'
R	V-313	2380	0	177.3		0100.0		ACID ZEN=179° @206'
R	V-313	3380	0	173.8		3281.0		ACID ZEN=177° @295'
R				.		.		
R				.		.		
R				.		.		
R				.		.		
R				.		.		
R				.		.		
R				.		.		
R				.		.		
R				.		.		
R				.		.		
R				.		.		
R				.		.		

Code	Drillhole	Comments, Errant Remarks, Snivellings and/or Lewd Suggestions
1	2 8	10 47

DDH V-313 (2 — 8)

Cyprus Anvil Mining Corp.

Lithologic Log

Logged By: DJH

Code	From	To	Unit	Code	Description
1	10 14	16 20	22 23	25 27	
/	1 1 10 0	1 1 69 0	1	1#1	O/B ; triconed 0 - 45 ; 45-69' cored boulders (17' recovered) - mainly granitic comp. but w/ occas. unit 4
/	1 1 69 0	1 1 71 46	12	4 1A 10	
/	1 1 71 46	1 1 81 25	13	4 1L 10	w/o sdes ; a few pieces of qtz. monzonite? (where did it come from?!)
/	1 1 81 25	1 1 81 70	14	0 Q 10	w/ minor 5B
/	1 1 81 70	1 1 91 85	15	5 1B 16	? w/ minor 4L? ; difficult if not impossible to determine lithology due to extensive clay gouge ; minor OQO pieces
/	1 1 91 85	1 / 13 15 8	16	4 1A 10	
/	1 / 13 15 8	1 / 14 10 0	17	4 1E 16	60:40 interbanded 4EO : 4G4 ; weakly calc
/	1 / 14 10 0	1 / 15 14 0	18	5 1A 10	w/ 1' 4LO @ start of int.
/	1 / 15 14 0	1 / 18 16 0	19	5 1B 16	sections of gouge & heavily broken core
/	1 / 18 16 0	1 / 19 1 0	10	5 1D 16	
/	1 / 19 1 0	12 01 / 5	11	5 1B 16	w/ incip. brecciat'n
/	12 01 / 5	12 1 / 12 0	12	5 1A 10	w/ minor incip. brecciat'n @ start of int.
/	12 1 / 12 0	12 14 16 6	13	5 1A 13	
/	12 14 16 6	12 18 19 0	14	5 1A 1	→ 5A 16
/	12 18 19 0	13 1 / 10 0	15	5 1A 16	w/ 25% 5B2 interbanded ; frequent gouge / breccia zones ;
/	13 1 / 10 0	13 13 1 / 3	16	5 1B 16	360?
/	13 13 1 / 0	13 15 16 0	17	5 1A 16	
		1E 10 H			

DDH V-313 (2 … 8)

Cyprus Anvil Mining Corp.
Structural Log

Logged By: DJH

V-313

Code	From	To	Feature	Sym	S_1 Dip Direct.	S_2 Dip Direct.	Description
1	10 14	16 20	22 24	26	28 32	34 38	
S		690	CS2			45 220	S region 69 – 107'
S		850	CS2			46 220	
S		1070	F2	Σ		80 220	Z region 107' – 121'
S		1210	F2	3			S region 121' – 191'
S		1270	CS2			65 220	
S		1485	CS2			77 220	
S		1680	CS2			69 220	
S		1880	CS2			52 220	
S		1910	F2	S			PS2 region 191 – 223.3
S		2090	PS2			47 220	
S		2233	F2	P			S region 223.3 – 237'
S		2290	CS2			56 220	
S		2370	F2	S			PS2 region 237.0' – 356
S		2490	PS2			48 220	
S		2670	PS2			42 220	
S		2855	PS2			30 220	
S		3010	PS2			72 220	
S		3200	PS2			33 220	– post D2 fol'n
S		3380	PS2			50 220	
S		3550	PS2			45 220	
		EOH					

DDH V-313

Cyprus Anvil Mining Corp.

Geochemical Log (Sampler's Copy)

Logged By: DJH.

Sampled By:

Code	From	To	Sample No.	Description			
1	10 14	16 20	22 27	UNIT	LENGTH	REC.	
P	1690	1746	1 1 1 1 1	4AO	5.6	5.0	
P	1985	10130	1 1 1 1 2	4AO	4.5	3.5	
P	10130	10980	1 1 1 1 3	4AO	5.0	3.0	
P	10980	11130	1 1 1 1 4	4AO	5.0	3.5	
P	11130	11180	1 1 1 1 5	4AO	5.0	4.0	
P	11180	12130	1 1 1 1 6	4AO	5.0	2.0	
P	12130	12180	1 1 1 1 7	4AO	5.0	1.5	
P	12180	13130	1 1 1 1 8	4AO	50	2.0	
P	13130	13158	1 1 1 1 8	4AO	2.8	2.0	?
P	13158	14000	1 1 1 1 9	4EG	4.2	4.0	?

CYPRUS ANVIL MINING CORPORATION

DIAMOND DRILL CORE LOG

Hole Number: V-314

Fabric Orientation Diagram:

Project: VANGORDA

Location: VANGORDA PLATEAU

Claim: _____

Terr. Plane Co-ords.: _____ N

_____ E

Grid Co-ords.: _____

_____

All symmetry determinations looking N.W. with 52 dipping S.W. with dip azimuth 220.

Elevation: _____

Total Depth: 361.0'

Purpose: _____

Logged by: D.J.H. Date(s) Logged: _____

Drilling Contractor: A.D.D.

Core:

Size	From	To
N.Q.	56.2'	361.0'

Collar Cased and Capped: ____

Started: _____ Completed: _____

Cyprus Anvil Mining Corp.
Diamond Drill Core Log

DDH V1-314

Code	Drillhole	Elevation	Northing	Easting	Comments
1	2 8	10 16	17 24	25 32	34 48
T	V1-314	11141.82	9034620.4	5938661.3	FEET

Code	Drillhole	Depth	Zenith Angle	True Azimuth	Comments
1	2 8	10 14	22 26	28 32	34 56
R	V1-314	0 0	180.0	.	ATCOLLAR
R	V1-314	1430	177.5	308.0	ACID ZEN=179° @78'
R	V1-314	2430	173.3	281.0	ACID ZEN=177° @178'
R	V1-314	3433	170.0	283.0	ACID ZEN=174° @288'
R		.	.	.	ACID ZEN=171° @361'
R		.	.	.	
R		.	.	.	
R		.	.	.	
R		.	.	.	
R		.	.	.	
R		.	.	.	
R		.	.	.	
R		.	.	.	
R		.	.	.	
R		.	.	.	

Code	Drillhole	Comments, Errant Remarks, Snivellings and/or Lewd Suggestions
1	2 8	10 47

DDH V-314 (2 … 8)
2W

Cyprus Anvil Mining Corp.
Lithologic Log

Logged By: DJH

Code	From	To	Unit	Code	Description
1	10 14	16 20	22 23	25 27	
L	00	562	1	#	O/B; cored granitic boulders and Fe oxide cemented O/B
L	562	616	2	#	O/B?; boulders of 4C, 4E, 4L? or bedrock - some cemented frags.
L	616	950	3	5B6	→5B62; minor 5B0
L	950	1275	4	5A3	w/minor 5A6
L	1275	1450	5	5B2	→5B23
L	1450	1540	6	5A3	
L	1540	2385	7	5A1	no sdes; thin qtzose lams
L	2385	2475	8	5A3	
L	2475	2593	9	5B2	→5B23
L	2593	3130	10	5AB	70:30 interbanded 5A0:5B62
L	3130	3488	11	5A3	
L	3488	3610	12	5A0	
		EOH			

DDH V-3.1.4. (2 / 8)

Cyprus Anvil Mining Corp.
Structural Log

Logged By: DJH.

Code	From	To	Feature	Sym	S_1 Dip Direct.	S_2 Dip Direct.	Description
1	10 14	16 20	22 24	26	28 32	34 38	
S		56.2	F2	R			
S		1518 0	P1S12			41 21210	R region 56.2 - 61.5
S		1615	1F12	R			PS2 61.5 - 90.5
S		1830	P1S12			614 21210	
S		1905	1F12	P			S region 90.5 - 98.6
S		1986	1F12	S		617 21210	D.D. region 98.6 - 126.0
S		11180	C1S12			516 21210	
S		11260	1F12	D			PS2 126.0 - 147.5
S		11380	P1S12			515 21210	
S		11475	1F12	P			S region 147.5 - 193.6
S		11580	C1S12			613 21210	
S		11780	C1S12			517 21210	
S		11936	1F12	E			Z region 193.6 - 234.0
S		11970	C1S12			57 21210	
S		12170	C1S12			612 21210	
S		12340	1F12	3		418 21210	S region 234.0 - 239.0
S		12390	1F12	S			PS2 239.0 - 243
S		12430	1F12	P			S region 243 - 259.5'
S		12530	C1S12			513 21210	
S		12595	1F12	E			Z region 259.5 - 267.0
S		12670	1F12	Z		710 21210	D.D. region 267.0 - 321.5
S		12880	C1S12			614 21210	
S		13018	C1S12			617 21210	
S		13215	1F12	D		812 21210	S region 321.5 - 335.5
S		13355	1F12	S			M region 335.5 - 355.0
S		13410	C1S12			713 21210	
S		13550	1F12	M			Z region 355.0 - 361.0
S		13610	1F12	Z		814 21210	
		EOH					

CYPRUS ANVIL MINING CORPORATION

DIAMOND DRILL CORE LOG

Hole Number: V-319

Project: VANGORDA

Location: VANGORDA PLATEAU

Claim: _____

Terr. Plane Co-ords.: _____ N

_____ E

Grid Co-ords.: _____

_____

Elevation: _____

Total Depth: 483.0

Fabric Orientation Diagram:

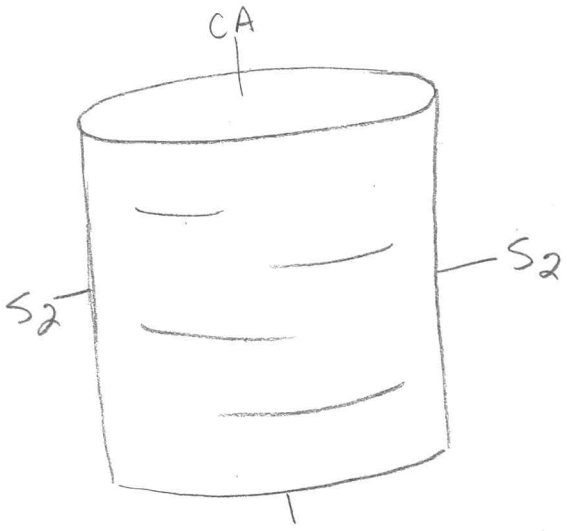

All symmetry determinations looking NW with S_2 dipping SW with dip azimuth 220.

Purpose: _____

Logged by: JWM Date(s) Logged: _____

Drilling Contractor: A.D.D. Core: Size From To Collar Cased and Capped: ____

_____ _____ _____

_____ _____ _____

_____ _____ _____

Started: _____ Completed: _____

Cyprus Anvil Mining Corp.

Diamond Drill Core Log

DDH V-319

Code	Drillhole	Elevation	Northing	Easting	Comments
1	2 8	10 16	17 24	25 32	34 48
T	V-319	11551.07	9035431.1	5939561.5	FEET

Code	Drillhole	Depth	Zenith Angle	True Azimuth	Comments
1	2 8	10 14	22 26	28 32	34 56
R	V-319	0 0	1810.0	.	ATCOLLAR
R	V-319	1650	1741.5	0983.0	
R	V-319	2650	1701.0	0716.0	ACID ZENITH=1711° @2512
R	V-319	3650	1681.0	0971.0	ACID ZENITH=1701° @3151
R	V-319	4653	1631.3	0981.0	ACID ZENITH=1616° @4171
R			.	.	
R			.	.	
R			.	.	
R			.	.	
R			.	.	
R			.	.	
R			.	.	
R			.	.	
R			.	.	
R			.	.	
R			.	.	

Code	Drillhole	Comments, Errant Remarks, Snivellings and/or Lewd Suggestions
1	2 8	10 47

DDH V-319 (2–8)

Cyprus Anvil Mining Corp.
Lithologic Log

Logged By: JWM

Code	From	To	Unit	Code	Description
1	10–14	16–20	22 23	25–27	
L	00	510	01		AIR
L	510	788	02	5B6	2 typical grey phyllite, non-calcareous.
L	788	1020	03	4L0	minor calcareous inter-bands
					towards end of interval., minor cpy.
L	1020	1130	04	4L6	→ 5B6, minor calcareous seams
L	1130	1160	05	4L0	→ 4L07
L	1160	1188	06	5C3	Fine grained fizzes readily in 10%
L	1188	1305	07	4L0	1250-126.0' minor calc. band.
					5C3?
L	1305	1438	08	5B6	→ 5B0
L	1438	1660	09	4L0	→ 4L6
L	1660	1670	10	5D3	Z.Rk – 5C3?
L	1670	1740	11	4L0	as in unit 09
L	1740	1749	12	5D3	Z.Rk. as in unit 10
L	1749	1885	13	4L6	
L	1885	1905	14	5D3	Z.Rk. as in unit 10,12
L	1905	1924	15	4L6	
L	1924	1940	16	5D3	Z.Rk as in unit 10,12,14
L	1940	1982	17	4L6	
L	1982	2355	18	4L0	→ locally to 4L3 over entire int.
L	2355	2533	19	5B0	Variably calc. locally to 5B4(4L6)
L	2533	2571	20	0Q0	10% 5B6
L	2571	2607	21	5B0	
L	2607	2620	22	4A0	
L	2620	2627	23	5D0	Z.Rk. 5C0?
L	2627	2780	24	4L3	
L	2780	2820	25	4E87	Folioform magnetite.
L	2820	3066	26	4L07	→ 4L3
L	3066	3770	27	4L3	interbanded 4L/5B6 – would make good t.s.
L	3770	4211	28	4L0	similar to unit 27, with 4L/5B6
L	4211	4420	29	4L6	locally to 4L0
L	4420	4710	30	5B6	→ 4L6
L	4710	4748	31	4L0	
L	4748	4753	32	5D0	Z.Rk. 5C
L	4753	4768	33	4L7	
L	4768	4810	34	5D0	As in unit 32
L	481.0	483.0	35	4L6	

EOH

DDH V-319 (2 / 8)

Cyprus Anvil Mining Corp.
Structural Log

Logged By: WM

Code	From	To	Feature	Sym	S_1 Dip Direct.	S_2 Dip Direct.	Description
	10 14	16 20	22 24	26	28 32	34 38	
S		1570	PS2			65 220	
S		1760	PS2	P		80 220	PS2
S		1900	PS2	Z		72 220	
S		1990	PS2	S		75 220	
S		11070	PS2			70 220	
S		11170	PS2			65 220	
S		11270	PS2			68 220	
S		11460	PS2	P		75 220	PS2
S		11590	S2	Z		73 220	
S		11680	S2			65 220	
S		1189	S2	S		68 220	
S		1189	S2	Z		80 220	
S		12070	S2			70 220	
S		12176	S2			50 220	
S		12270	S2			75 220	
S		12370	S2			85 220	
S		12470	S2			80 220	
S		12580	S2			60 220	
S		12770	S2			50 220	
S		12870	S2	S		65 220	overall S region 189-287
							generally PS2 throughout
S		12970	S2	M		70 220	
S		3106	PS2			55 220	
S		31220	PS2			60 220	
S		3312	PS2			74 220	
S		3411	PS2	M		60 220	306-341 M region-
							dominantly S symm.
S		13570	PS2			72 220	
S		13670	PS2			75 220	
S		13820	PS2	S		75 220	
S		13970	PS2			75 220	
S		4070	PS2			68 220	
S		4200	PS2	P		70 220	367-420 ps2
S		4370	PS2			65 226	

DDH V-319 (2 — 8)

Cyprus Anvil Mining Corp.
Structural Log

Logged By: WM.

Code	From	To	Feature	Sym	S_1 Dip Direct.	S_2 Dip Direct.	Description
1	10 — 14	16 — 20	22 — 24	26	28 — 32	34 — 38	
S		A470	PS2			75 220	
S		A740	PS2			77 220	
S		A830	PS2	S		70 220	S sym. to 483.0

DDH V-319

Cyprus Anvil Mining Corp.

Geochemical Log (Sampler's Copy)

Logged By: JWM

Sampled By:

Code	From	To	Sample No.	Description
1	10 14	16 20	22 27	UNIT LENGTH REC
P	2607	2620	35183	4A0 1.3
P	2740	2780	35184	4L3 4.0
P	2780	2820	35185	4E87 4.0
P	2820	2860	35186	4L07 4.0

CYPRUS ANVIL MINING CORPORATION

DIAMOND DRILL CORE LOG

Hole Number: V-28-R

Project: VANGORDA

Location: VANGORDA PLATEAU

Claim: _____

Terr. Plane Co-ords.: _____ N

_____ E

Grid Co-ords.: _____

_____

Elevation: _____

Total Depth: 436.0'

Fabric Orientation Diagram:

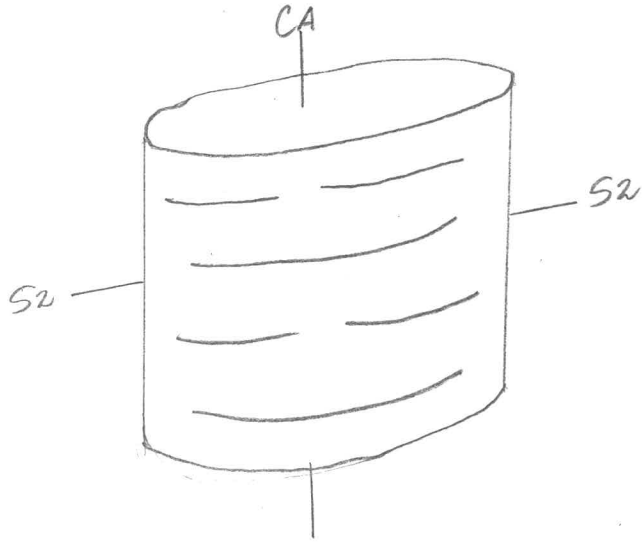

All symmetry determinations looking N.W. with S2 dipping S.W. with dip azimuth 220.

Purpose: _____

Logged by: D.J.H. Date(s) Logged: _____

Drilling Contractor: A.D.D.

Core:

Size	From	To
N.Q.	63.8'	436.0'

Collar Cased and Capped: _____

Started: _____ Completed: _____

Cyprus Anvil Mining Corp.

Diamond Drill Core Log

DDH V-28-R

Code	Drillhole	Elevation	Northing	Easting	Comments
	2 8	10 16	17 24	25 32	34 48
T	V-28-R	1145.24	9034869.9	5938927.7	FEET

Code	Drillhole	Depth	Zenith Angle	True Azimuth	Comments
	2 8	10 14	22 26	28 32	34 56
R	V-28-R	0 0	180.0	.	AT COLLAR
R	V-28-R	180	174.5	333.0	AC/D ZEN=177° @122'
R	V-28-R	280	172.7	319.0	AC/D ZEN=173° @260'
R	V-28-R	380	168.0	310.0	AC/D ZEN=169° @325'
R	V-28-R	480	163.0	320.0	AC/D ZEN=165° @425'
R			.	.	
R			.	.	
R			.	.	
R			.	.	
R			.	.	
R			.	.	
R			.	.	
R			.	.	
R			.	.	
R			.	.	
R			.	.	

Code	Drillhole	Comments, Errant Remarks, Snivellings and/or Lewd Suggestions
	2 8	10 47

DDH V-28-R (2 8)

Cyprus Anvil Mining Corp.
Lithologic Log

Logged By: DJH.

Code	From	To	Unit	Code	Description
1	10 14	16 20	22 23	25 27	
L	10 0	1638	1	#1	O/B - triconed 0-51'; 51'-63.8'
					iron oxide cemented granitic and
					phyllitic frags
L	1638	1652	2	4E10	
L	1652	1730	3	4L13	W.M. alt'n w/ minor 4A interbanded.
L	1730	1757	4	4A10	<4% Pb+Zn
L	1757	1810	5	4L11	w/ minor 4CO; heavily broken core w/
					slick surfaces and minor gouge present.
L	1810	1818	6	4E10	~6% Pb+Zn?
L	1818	11010	7	5A10	int. is 60% graphitic & clay gouge
L	11010	11330	8	5B16	
L	11330	11570	9	5A13	
L	11570	11680	10	5A16	
L	11680	11770	11	5A13	
L	11770	11966	12	5B10	
L	11966	12206	13	5A16	w/ minor 5BO
L	12206	12555	14	5A13	
L	12555	12852	15	5A16	
L	12852	12942	16	5A11	
L	12942	13180	17	5A16	
L	13180	13312	18	5B16	→5B62
L	13312	13616	19	5A16	→5A1 locally
L	13616	14016	20	5A13	
L	14016	14360	21	5B10	w/20% 5B6
		EOH			

DDH V-28-R2 8

Cyprus Anvil Mining Corp.
Structural Log

Logged By: DJH.

Code	From	To	Feature	Sym	S_1 Dip Direct.	S_2 Dip Direct.	Description
1	10 14	16 20	22 24	26	28 32	34 38	
S		1740	C1S12			7132210	PS2 region 64' - 88'
S		1818 0	1F12	P			Gouge & Bxia zone 88' - 98'
							(no reliable S2)
S		198 0	C1S12			6182210	S region 98' - 130'
S		1/1170	C1S12			6192210	
S		1/1300	1F12	S			R region 130-239' (possibly
S		1/1370	P1S12			5182210	a true PS2 region)
S		1/1575	P1S12			6162210	- minor S&Z sym.
S		1/1775	P1S12			6132210	
S		1/1970	P1S12			7132210	
S		12/170	P1S12			6152210	
S		12390	1F12	R		5122210	S region 239' - 269.5'
S		12590	C1S12			5172210	
S		12695	1F12	S			R region 269.5 - 285
S		12780	P1S12			5162210	
S		12850	1F12	R			S region 285 - 292.5
S		12925	1F12	S		7122210	Breccia & Gouge 292.5 - 312
							(no reliable S2 measurement)
S		131/20	A1S12			4182210	PS2 region 312.0' - 359.0'
S		13120	P1S12			5182210	
S		13130	P1S12			5142210	
S		13190	1F12	P			D.D. region 359.0 - 380.0
S		13730	C1S12			5182210	
S		13810	1F12	D			Z region 380 - 389.
S		13890	1F12	3			S region 389 - 402
S		13930	C1S12			6142210	
S		14020	1F12	E			Z region 402 - 415
S		14150	1F12	Z		5102210	M region 415 - 434
S		14340	1F12	M		5162210	P region 434-436
		1501H					

DDH V-28-R (2 / 8)

Cyprus Anvil Mining Corp.
Geochemical Log (Sampler's Copy)

Logged By: DJH

Sampled By:

Code	From	To	Sample No.	Description		
1	10 14	16 20	22 27	UNIT	LENGTH	REC
F	1638	1652	113012	4EO	1.4	1.4
P	1652	1730	113013	4L3	7.8	7.8
P	1730	1757	113014	4AO	2.7	2.7
P	1757	1810	113015	4L1	5.3	5.3
P	1810	1818	113016	4EO	7.0	7.0

CYPRUS ANVIL MINING CORPORATION

DIAMOND DRILL CORE LOG

Hole Number: V-30-R

Project: VANGORDA

Location: VANGORDA PLATEAU

Claim: _____

Terr. Plane Co-ords.: _____ N

_____ E

Grid Co-ords.: _____

_____

Elevation: _____

Total Depth: 438.0'

Fabric Orientation Diagram:

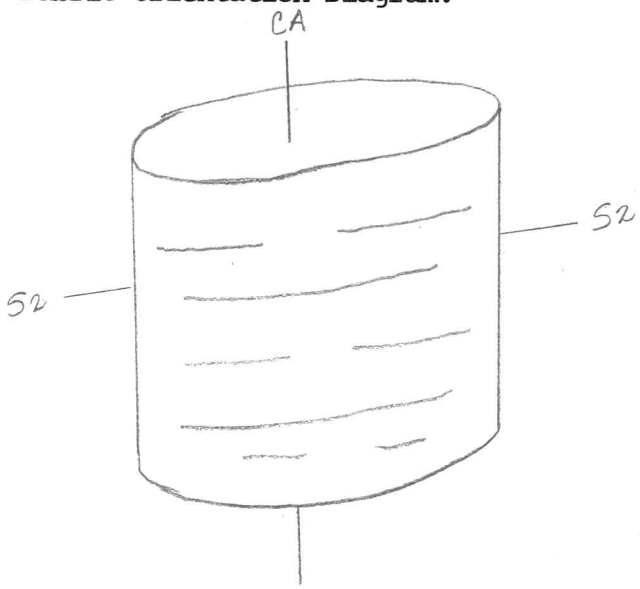

All symmetry determinations looking

N.W. with S2 dipping

S.W. with dip azimuth 220.

Purpose: _____

Logged by: D.J.H. Date(s) Logged: _____

Drilling Contractor: A.D.D.

Core:

Size	From	To
NQ	56.4'	438.0'

Collar Cased and Capped: ____

Started: _____ Completed: _____

Cyprus Anvil Mining Corp.
Diamond Drill Core Log

DDH V-30-R
2 8
SECT. 2W.

Code	Drillhole	Elevation	Northing	Easting	Comments
	2 8	10 16	17 24	25 32	34 48
T	V-30-R	11151.29	9035211.9	593932.9	FEET

Code	Drillhole	Depth	Zenith Angle	True Azimuth	Comments
	2 8	10 14	22 26	28 32	34 56
R	V-30-R	00	180.0	.	AT COLLAR
R	V-30-R	1150	175.8	103.0	ACID ZEN=178° @ 10'
R	V-30-R	2150	177.2	123.0	ACID ZEN=176° @ 218'
R	V-30-R	3150	177.2	069.0	ACID ZEN=177° @ 293'
R	V-30-R	4150	176.5	003.0	ACID ZEN=179° @ 405'
R		.	.	.	
R		.	.	.	
R		.	.	.	
R		.	.	.	
R		.	.	.	
R		.	.	.	
R		.	.	.	
R		.	.	.	
R		.	.	.	
R		.	.	.	
R		.	.	.	

Code	Drillhole	Comments, Errant Remarks, Snivellings and/or Lewd Suggestions
	2 8	10 47

DDH V-30-R (2 — 8)

Cyprus Anvil Mining Corp.
Lithologic Log

Logged By: DJH

Code	From	To	Unit	Code	Description
1	10 14	16 20	22 23	25 27	
L	1100	1564	1	1#1	triconed (no-core)
L	1564	1680	2	5B16	- unaltered
L	1680	1707	3	4C15	w/ ~10% py ; 10-15% thin carb. lams.
L	1707	1860	4	5B61	→ 5B61
L	1860	1930	5	4L11	→ 4L17 ; W.M. alt'n ; → 4C7 locally
L	1930	12188	6	5B16	→ 5B61 locally
L	12188	14400	7	4L11	musc > chl ; W.M. alt'n
L	14140	14190	8	5B16	w/ minor 4A & 4L1 (as unit 7)
L	14190	15174	9	5D16	w/ 20% QQ
L	15174	17055	10	5B16	
L	17105	1930	11	4A10	→ 4A4 locally ; 3-5% Pb+Zn from
			1		175-193.0 ; badly broken core
L	1930	19157	12	4E10	w/ 20% 4C0 ; → 4E4 locally.
L	19157	21010	13	5B16	→ 5B62
L	21010	21155	14	5D11	→ 4L0 locally ; weakly W.M. altered
			1		throughout ; nosdes
L	21155	21210	15	4E16	→ 4E68 ; weakly calc. ; → 4GE locally.
L	21210	21230	16	5D11	→ 5D16 ; v. minor po blebs
L	21230	21370	17	4E16	4G4 228-237 as unit 15 ; → 4E68
L	21370	21458	18	4E1C	60:40 , 4E0 : 4C0 ;
L	21458	21545	19	4C1E	faulted lower ct. w/sde. frags. → 4K0 locally ; 60 : 30 : 10 , 4C : 4E : 4K
L	21545	21597	20	5A1*	w/ siliceous & tuffaceous frags
L	21597	21615	21	5D16	Kaolin? alt'n (5D4?) ; gouge?
L	21615	21692	22	5A1*	w/ siliceous frags ; w/ 20% graphitic
			1		clay gouge
L	21692	21865	23	5B12	→ 5B26
L	21865	21925	24	5A10	
L	21925	23014	25	5B16	breccia ; gouge @ upper & lower cts.
L	23014	23816	26	5A10	breccia & gouge zones throughout int.
L	23816	24100	27	5B16	
L	24010	24188	28	5A10	
L	24188	24380	29	5B10	→ 5B02 ; calc !!! variably
		EOH			

DDH V-30-R (2 / 8)

Cyprus Anvil Mining Corp.
Structural Log

Logged By: DJH.

Code	From	To	Feature	Sym	S_1 Dip Direct.	S_2 Dip Direct.	Description
1	10 14	16 20	22 24	26	28 32	34 38	
S		15170	CIS12			619 2210	D.D. 56.4 - 71.0'
S		17100	IFI2	D		812 2210	Z region 71.0 - 120.5'
S		19100	CIS12			617 2210	
S		11110	CIS12			715 2210	
S		12105	IFI2	3			S region 120.5 - 163.0'
S		12180	CIS12			710 2210	
S		14170	CIS12			613 2210	
S		16130	IFI2	E		615 2210	Z region 163.0 - 205.0
S		18100	CIS12			310 2210	
S		20150	IFI2	Z		610 2210	PS2 region 205.0 - 271.0
S		22140	PIS12			514 2210	(w/ minor breccia)
S		23180	PIS12			518 2210	- no reliable S2 238-270 (breccia
S		27100	IFI2	P		512 2210	Z region 271.0 - 288.0
S		28180	IFI2	Z		317 2210	R region 288.0 - 386.5 (5A)
							- possibly a true PS2 region
							as 5B beneath 5A has
							no lithon structure either
S		31017	PIS12			413 2210	(should be a R/P contact
S		32140	PIS12			317 2210	somewhere in this interval)
S		34150	PIS12			218 2120	
S		36150	PIS12			018 2210	
S		38165	IFI2	R		319 2210	PS2 w/ minor post D2 Kink folds
S		41010	PIS12			610 2210	386.5 - 438.0'
S		42100	PIS12			612 2210	
S		43170	PIS12			414 2210	
		EOH					

DDH V-30-R (2 / 8)

Cyprus Anvil Mining Corp.
Geochemical Log (Sampler's Copy)

Logged By: DJH

Sampled By:

From (10–14)	To (16–20)	Sample No. (22–27)	Description		
			LENGTH	UNIT	REC.
1/1705	1/1750	111111 10	4.5	4AO	4.5
1/1750	1/1800	111111 11	5.0	4AO	4.0
1/1800	1/1850	111111 12	5.0	4AO	2.0
1/1850	1/1900	111111 13	5.0	4AO	4.8
1/1900	1/1930	111111 14	3.0	4AO	4.6
1/1930	1/1957	111111 15	2.7	4EO	2.5
12/155	12/210	111111 16	5.5	4E6	5.0
12/210	12/230	111111 17	2.0	5D1	2.0
12/230	12/280	111111 18	5.0	4E6	5.0
12/280	13/130	111111 19	5.0	4E6	4.5
13/130	13/170	111111 10	4.0	4E6	4.0
13/170	14/120	111111 11	5.0	4EC	4.5
14/120	14/170	111111 12	5.0	4EC	4.9
14/170	15/120	111111 13	5.0	4CE	4.5
15/120	15/145	111111 14	2.5	4CE/4L	1.5

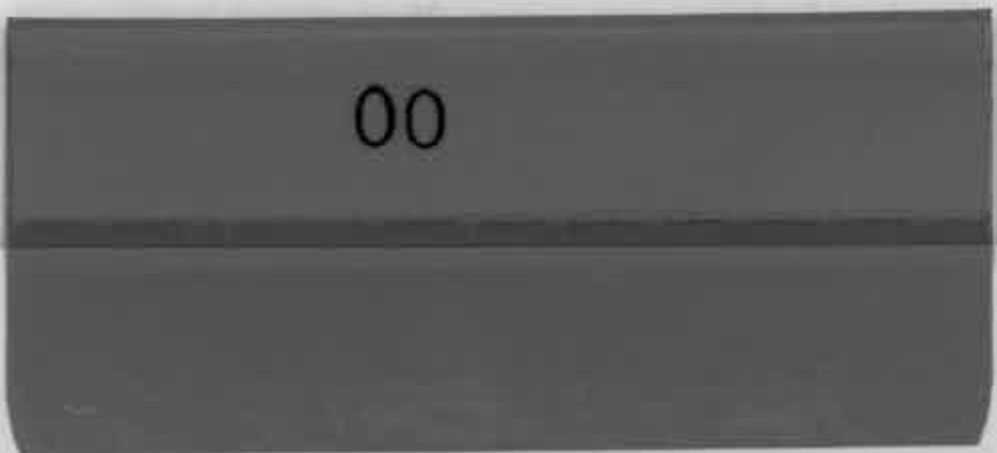
00

CYPRUS ANVIL MINING CORPORATION

DIAMOND DRILL CORE LOG

Hole Number: V-315

Project: VANGORDA

Location: VANGORDA PLATEAU

Claim: _____

Terr. Plane Co-ords.: _____ N

_____ E

Grid Co-ords.: _____

_____

Elevation: _____

Total Depth: 365.5'

Fabric Orientation Diagram:

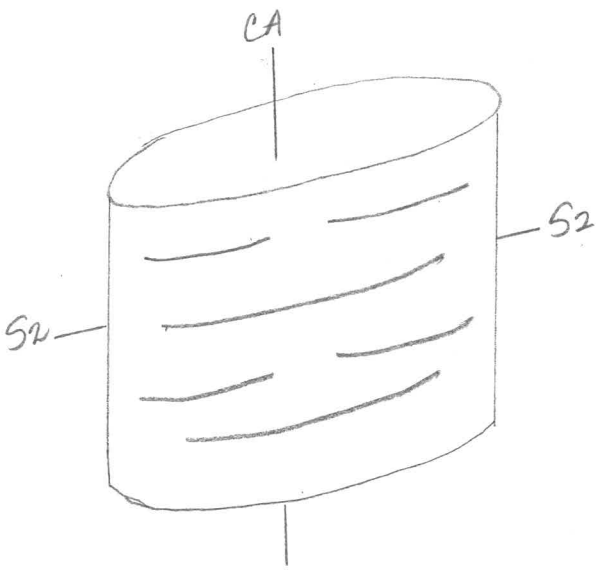

All symmetry determinations looking N.W. with S2 dipping S.W. with dip azimuth 220.

Purpose: _____

Logged by: D.J.H. Date(s) Logged: _____

Drilling Contractor: A.D.D.

Core: Size From To Collar Cased and Capped: _____

N.Q. 26.0' 365.5'

_____ _____ _____

_____ _____ _____

Started: _____ Completed: _____

Cyprus Anvil Mining Corp.

Diamond Drill Core Log

DDH V-315

Code	Drillhole	Elevation	Northing	Easting	Comments
1	2 8	10 16	17 24	25 32	34 48
T	V-315	1137.55	9034201.6	5939041.8	FEET

Code	Drillhole	Depth		Zenith Angle		True Azimuth		Comments
1	2 8	10	14	22	26	28	32	34 56
R	V-315	0	0	180.0		.		AT COLLAR
R	V-315	141	0	177.0		011.0		
R	V-315	241	0	177.2		033.0		
R	V-315	341	0	176.7		333.0		ACID IEW: 179° @ 365'
R				.		.		
R				.		.		SURVEYED WITH 3 RODS
R				.		.		
R				.		.		
R				.		.		
R				.		.		
R				.		.		
R				.		.		
R				.		.		
R				.		.		
R				.		.		
R				.		.		

Code	Drillhole	Comments, Errant Remarks, Snivellings and/or Lewd Suggestions
1	2 8	10 47

DDH V-315

Cyprus Anvil Mining Corp.
Lithologic Log

Logged By: DJH.

Code	From	To	Unit	Code	Description
1	10 14	16 20	22 23	25 27	
L	0 0	26 0	1	#	triconed - no core
L	26 0	42 0	2	5B6	rusty fol'n surfaces; end of int.
					questionable due to lost core
L	42 0	48 8	3	4L1	rusty S2; 4B? - weakly muscovitic
L	48 8	53 8	4	5B6	as unit 2
L	53 8	55 8	5	4L1	as unit 3
L	55 8	69 6	6	5B6	as units 4, 2
L	69 6	84 2	7	4L0	; weak → mod. silica & WM
					alt'n; v. minor sdes present; protolith
					appears to be 5D.
L	84 2	86 2	8	5D0	laminated variety; weakly calc.
L	86 2	91 0	9	4A0	visible sph
L	91 0	92 3	10	4E4	
L	92 3	108 0	11	4A0	~5% tot. sdes (mainly py)
L	108 0	117 9	12	4G0	→ 4G4 locally
L	117 9	119 5	13	4L3	no sdes
L	119 5	128 0	14	5B6	→ 5B67; unaltered
L	128 0	150 5	15	4L6	weakly altered (silica + chlorite?) 5D
L	150 5	155 0	16	4L7	→ 4L71; silica + W.M. alt'n
L	155 0	159 3	17	5B6	unaltered
L	159 3	163 3	18	4L0	→ 4L1; strong silica & WM alt'n
L	163 3	178 0	19	5B6	v. minor chl. alt'n? (4L6?)
L	178 0	180 7	20	4L6	mod. WM alt'n; protolith = 5D
L	180 7	183 9	21	4C0	~20% py
L	183 9	188 0	22	4E3	
L	188 0	191 7	23	4C0	→ 4D0 locally; 20% OQO;
					brecciated in part; ~
L	191 7	194 3	24	4E8	→ 4K0 locally
L	194 3	198 8	25	5AD	60:40 5A0 : 5D0; breccia zone
L	198 8	201 2	26	5B6	incip. brecciation
L	201 2	204 9	27	5D0	weakly calc
L	204 9	210 8	28	4L1	silica + W.M. alt'n; breccia zone w/
					massive sph infilling some frags.
L	210 8	221 5	29	4E8	w/ minor 4G4 bands
L	221 5	227 6	30	4K0	carb. = calcite
L	227 6	247 0	31	4E8	w/ 20% 4G4 bands.

DDH V-315 (2 — 8)

Cyprus Anvil Mining Corp.

Lithologic Log

Logged By: _____

Code	From	To	Unit	Code	Description
1	10 — 14	16 — 20	22 23	25 — 27	
L	12141 0	12417 0	312	4C10	→ 4E8 locally; ~70% tot. sdes; brecciated locally
L	12417 0	12510 3	313	4K10	w. M & silica alt'n
L	12503	12619 0	314	5A1*	breccia.
L	12619 0	12819	315	4K11	breccia; w.M. + silica alt'n; 5D protolith; grad. upper cnt.
L	12819	12917 0	316	5B16	unaltered; minor incip. breccia.
L	12917 0	13655	317	5A10	→ 5A1 locally; no sdes; breccia to 305'
		EOH.			

DDH V-315 (2 / 8)

Cyprus Anvil Mining Corp.
Structural Log

Logged By: DJH

Code	From	To	Feature	Sym	S_1 Dip Direct.	S_2 Dip Direct.	Description
	10 14	16 20	22 24	26	28 32	34 38	
S		12160	IF12	S			S region 26 - 48.5'
S		12175	CIS12			85 2120	
S		14185	IF12	E		77 2120	E region 48.5 - 108.0
S		16180	CIS12			81 2120	
S		17180	CIS12			74 2120	
S		18180	CIS12			81 2120	
S		19180	CIS12			82 2120	
S		110180	IF12	E		86 2120	R region 108.0 - 118.0
S		111180	IF12	R		69 2120	E region 118.0 - 132.0
S		112180	CIS12			79 2120	
S		113200	IF23				S region 132.0 - 155.3
S		113180	CIS12			78 2120	
S		114180	CIS12			84 2120	
S		115153	IF12	E		67 2120	E region 155.3 - 184.0
S		116180	CIS12			77 2120	
S		117180	CIS12			58 2120	
S		118140	IF12	E			R region 184.0 - 247.0
S		119200	PIS12			75 2120	
S		120150	PIS12			70 2120	
S		121150	PIS12			64 2120	
S		122150	PIS12			67 2120	
S		123130	PIS12			64 2120	
S		124130	PIS12			59 2120	
S		125170	IF12	R			
							Post D2 Breccia 247.0 - 305
							- no reliable S2 measurements
S		131050	IF12	S		53 2120	S region 305 - 330
S		131130	CIS12			42 2120	
S		132140	CIS12			45 2120	
S		133000	IF12	S			M region 330 - 365.5
S		133140	CIS12			51 2120	
S		134130	CIS12			61 2120	
S		135550	CIS12			56 2120	
S		136500	CIS12			010 2120	
		EOH					

DDH V-315 (2 / 8)

Cyprus Anvil Mining Corp.
Geochemical Log (Sampler's Copy)

Logged By: DJH

Sampled By:

Code	From	To	Sample No.	Description		
1	10 14	16 20	22 27	UNIT	LENGTH	REC.
P	1862	1923	114518	4AO/4E4	6.1	6.1
P	1923	1980	114519	4AO	5.7	5.7
P	9803	1030	114601	4AO	5.0	5.0
P	10130	10180	114611	4AO	5.0	5.0
P	10830	11390	114622	4EO	5.0	5.0
P	11130	11790	114633	4GO	4.9	4.9
P	11807	11839	114644	4CO	3.2	1.8
P	11839	11880	114655	4E3	4.1	4.1
P	11880	11917	114666	4CO	3.7	3.7
P	11917	11943	114677	4E8	2.6	2.6
P	12049	12108	114688	4LI	5.9	5.9
P	12108	12158	114699	4E8	5.0	4.5
P	12158	12215	114710	4E8	5.7	5.7
P	12215	12276	114711	4KO	6.1	6.1
P	12276	12320	114712	4E8	4.4	4.4
P	12320	12370	114733	4E8	5.0	5.0
P	12370	12410	114744	4E8	4.0	4.0 *
P	12410	12470	114755	4CO	6.0	6.0

CYPRUS ANVIL MINING CORPORATION

DIAMOND DRILL CORE LOG

Hole Number: V-316

Project: VANGORDA

Location: VANGORDA PLATEAU

Claim: _____

Terr. Plane Co-ords.: _____ N

_____ E

Grid Co-ords.: _____

_____

Elevation: _____

Fabric Orientation Diagram:

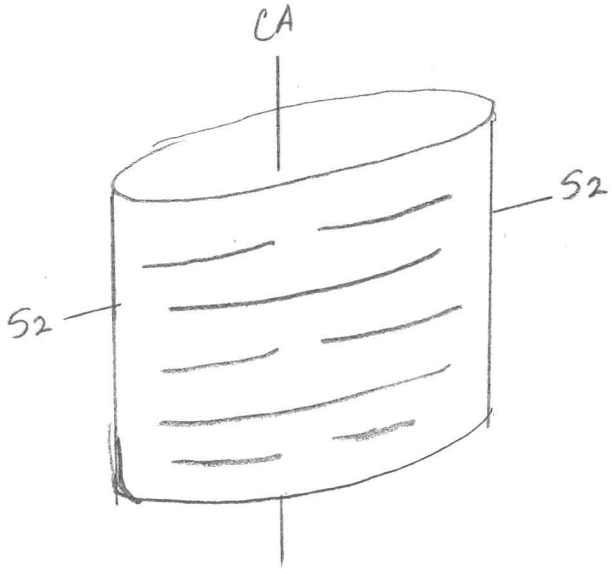

All symmetry determinations looking

N.W. with S2 dipping

S.W. with dip azimuth 220.

Total Depth: 498.0'

Purpose: _____

Logged by: D.J.H. Date(s) Logged: _____

Drilling Contractor: A.D.D.

Core:

Size	From	To
N.Q.	32.0'	498.0'

Collar Cased and Capped: ____

Started: _____ Completed: _____

Cyprus Anvil Mining Corp.
Diamond Drill Core Log

DDH V1-316

Code	Drillhole	Elevation	Northing	Easting	Comments
1	2 8	10 16	17 24	25 32	34 48
T	V1-316	11143.22	9034555.8	5939601.6	FEET

Code	Drillhole	Depth	Zenith Angle	True Azimuth	Comments
1	2 8	10 14	22 26	28 32	34 56
R	V1-316	0.0	180.0	.	AT COLLAR
R	V1-316	800.0	178.2	033.0	ACID ZEN=179° @ 610
R	V1-316	1800.0	173.0	078.0	ACID ZEN=174° @ 1818
R	V1-316	2800.0	170.0	076.0	ACID ZEN=171° @ 2877
R	V1-316	3800.0	167.0	083.0	ACID ZEN=173° @ 3770
R	V1-316	4800.0	161.5	098.0	ACID ZEN=163 @ 4777
R		.	.	.	
R		.	.	.	
R		.	.	.	
R		.	.	.	
R		.	.	.	
R		.	.	.	
R		.	.	.	
R		.	.	.	
R		.	.	.	
R		.	.	.	

Code	Drillhole	Comments, Errant Remarks, Snivellings and/or Lewd Suggestions
1	2 8	10 47

DDH V-316 (2–8)

Cyprus Anvil Mining Corp.
Lithologic Log

Logged By: DJH.

Code	From	To	Unit	Code	Description
1	10–14	16–20	22 23	25–27	
L	0 0	32 0	1	#	triconed-no core
L	32 0	36 2	2	4L0	weathered
L	36 2	44 5	3	5B6	
L	44 5	50 0	4	4L0	3.5' core rec. 46-58'
L	50 0	51 0	5	4A0	
L	51 0	73 3	6	5B6	
L	73 3	78 0	7	5D3	
L	78 0	89 5	8	4L0	w/ minor po
L	89 5	107 8	9	5B2	→ 5B26 w/ v. minor 4L0
L	107 8	115 2	10	4A4	reddish S1,2 foliaform sph; sph > py > gal
L	115 2	146 4	11	4A0	w/ minor Pb+Zn; py = 10-15%
L	146 4	153 0	12	5D3	(Fe,Mg) $CO_3^=$; both laminated & mottled
					varieties
L	153 0	155 0	13	4C7	w/ ~ 10% po; 4L17?
L	155 0	160 6	14	5D3	as unit 12 w/ minor 4C7 as unit 13
L	160 6	188 4	15	5B6	unaltered
L	188 4	195 4	16	5D3	w/ minor 4A
L	195 4	198 5	17	4L1	w/ minor 4A & 4C
L	198 5	214 8	18	4A0	tr. reddish sph
L	214 8	217 4	19	5D0	generally non-calc; breccia zone w/
					4D frags;
L	217 4	231 5	20	4G4	1 small 5D band
L	231 5	239 5	21	4DH	very weakly banded; not typical @ all
					of other qtzite units; ~50% po, 25%
					SiO_2 with remainder = carbonate, gal,
					sph; → 4DH4; weird looking
					conglomeration
L	239 5	242 0	22	4G4	
L	242 0	245 4	23	4H1	→ 4H14
L	245 4	248 4	24	5D3	Fe Mg $CO_3^=$
L	248 4	261 0	25	4H1	
L	261 0	274 5	26	4G4	w/ minor 4E; healed breccia zones
					($CO_3^=$ + SiO_2)
L	274 5	277 6	27	4E8	
L	277 6	279 0	28	5D3	Fe, Mg $CO_3^=$
L	279 0	288 1	29	4G4	w/ 15% 5D6 bands

DDH V-316 (2 — 8)

Cyprus Anvil Mining Corp.
Lithologic Log

Logged By: DJH.

Code	From	To	Unit	Code	Description
1	10 — 14	16 — 20	22 23	25 — 27	
L	12818 1	12950	310	4G4	
L	12950	12972	311	4E4	→ 4E41
L	12972	13112	312	4C8	weakly brecciated appearance; ~ 50% tot sdes (py)
L	13112	14216	313	4L6	→ 4L67 locally w/ minor 4L0
L	14216	14918	314	5B6	unaltered
		1E01H			

DDH V-316 (2 / 8)

Cyprus Anvil Mining Corp.
Structural Log

Logged By: DJH.

Code	From	To	Feature	Sym	S_1 Dip Direct.	S_2 Dip Direct.	Description
	10 14	16 20	22 24	26	28 32	34 38	
S		1313 0	IF12	S			S region 33.0 - 63.0
S		1318 0	C1S12			615 2210	
S		1418 0	C1S12			714 2210	
S		1518 0	C1S12			710 2210	
S		1630	IF12	E			Z region 63.0 - 153.0
S		1680	C1S12			618 2210	
S		1780	C1S12			617 2210	
S		1816 0	C1S12			518 2210	
S		1950	C1S12			611 2210	
S		1/1055	C1S12			618 2210	
S		1/1155	C1S12			710 2210	
S		1/1240	C1S12			612 2210	
S		1/1380	C1S12			615 2210	
S		1/1490	C1S12			711 2210	
S		1/1530	F12	Z			D.D. region 153.0 - 164.5
S		1/1590	C1S12			610 2210	
S		1/1645	IF12	D			Z region 164.5 - 198.5
S		1/1680	C1S12			518 2210	
S		1/1780	C1S12			617 2210	
S		1/1880	C1S12			613 2210	
S		1/1985	IF12	Z		614 2210	D.D. region 198.5 - 205.0
S		12050	IF12	D			Z region 205.0 - 215.0
S		12080	C1S12			618 2210	
S		12150	IF12	Z			R region 215.0 - 312.5
S		12180	P1S12			515 2210	
S		12290	P1S12			610 2210	
S		12400	P1S12			38 2210	
S		12570	P1S12			619 2210	
S		12670	P1S12			613 2210	
S		12785	P1S12			618 2210	
S		12880	P1S12			619 2210	
S		12920	P1S12			711 2210	
S		13030	P1S12			718 2210	
S		13125	IF12	R			PS2 w/minor S&Z
S		13180	P1S12			618 2210	312.5 - 498.0
S		13280	P1S12			617 2210	

DDH V-316 (2 8)

Cyprus Anvil Mining Corp.
Structural Log

Logged By: DJH

Code	From	To	Feature	Sym	S_1 Dip Direct.	S_2 Dip Direct.	Description
1	10 14	16 20	22 24	26	28 32	34 38	
S		13180	PS12			618 2210	
S		13480	PS12			617 2210	
S		13590	PS12			710 2210	
S		13680	PS12			716 2210	
S		13780	PS12			717 2210	
S		13880	PS12			713 2210	
S		13960	PS12			715 2210	
S		14060	PS12			712 2210	
S		14160	PS12			712 2210	
S		14260	PS12			712 2210	
S		14360	PS12			818 2210	
S		14470	PS12			813 2210	
S		14570	PS12			714 2210	
S		14680	PS12			619 2210	
S		14780	PS12			719 2210	
S		14880	PS12			811 2210	
S		14980	FZP			810 2210	

DDH V-316 (2 / 8)

Cyprus Anvil Mining Corp.
Geochemical Log (Sampler's Copy)

Logged By: DJH

Sampled By:

Code	From	To	Sample No.	Description		
1	10 14	16 20	22 27	UNIT	LENGTH	REC.
P	1/1017 8	1/1111 8	1 310319	4A4	4.0	4.0
P	1/1111 8	1/1152	1 310410	4A4	3.4	3.1
P	1/1152	1/1210 0	1 310411	4A0	4.8	4.8
P	1/1210 0	1/1250	1 310412	4A0	5.0	5.0
P	1/1250	1/1300	1 310413	4A0	5.0	5.0
P	1/1300	1/1350	1 310414	4A0	5.0	5.0
P	1/1350	1/1400	1 310415	4A0	5.0	5.0
P	1/1400	1/1464	1 310416	4A0	6.4	6.4
P	1954	1983	3047	4L1	3.1	3.1
P	1/1918 5	1/2010	1 310418	4A0	5.3	5.5
P	1/2010	1/2090	1 310419	4A0	5.0	5.0
P	1/2090	1/2148	1 310510	4A0	5.8	5.8
P	1/2148	1/2174	1 311101	5D0	2.6	2.6
P	1/2174	1/2210	1 311102	4G4	3.6	3.6
P	1/2210	1/2260	1 311103	4G4	5.0	5.0
P	1/2260	1/2315	1 311104	4G4	5.5	5.5
P	1/2315	1/2355	1 311105	4DH	4.0	4.0
P	1/2355	1/2395	1 311106	4DH	4.0	4.0
P	1/2395	1/2420	1 311107	4G4	2.5	2.5
P	1/2420	1/2454	1 311108	4H/4	3.4	3.4
P	1/2454	1/2484	1 311109	5D3	3.0	3.0
P	1/2484	1/2540	1 311110	4H1	5.6	5.6
P	1/2540	1/2610	1 311111	4H1	7.0	7.0
P	1/2610	1/2660	1 311112	4G4	5.0	5.0
P	1/2660	1/2710	1 311113	4G4	5.0	5.0
P	1/2710	1/2745	1 311114	4G4	3.5	3.5
P	1/2745	1/2776	1 311115	4E8	3.1	3.1
P	1/2776	1/2830	1 311116	4G4/5D6	5.4	5.4
P	1/2830	1/2881	1 311117	4G4/5D6	5.1	5.1
P	1/2881	1/2930	1 311118	4G4	4.9	4.9
P	1/2930	1/2972	1 311119	4E4/4G4	4.2	4.2
P	1/2972	1/3020	1 311120	4C8	4.8	4.8
P	1/3020	1/3070	1 311121	4C8	5.0	5.0
P	1/3070	1/3122	1 311122	4C8	5.2	5.2

CYPRUS ANVIL MINING CORPORATION

DIAMOND DRILL CORE LOG

Hole Number: V-01-R

Project: VANGORDA

Location: VANGORDA PLATEAU

Claim: _____

Terr. Plane Co-ords.: _____ N

_____ E

Grid Co-ords.: _____

_____

Elevation: _____

Fabric Orientation Diagram:

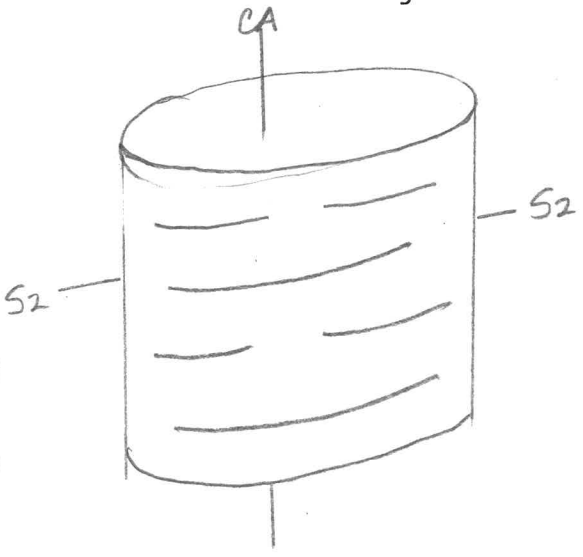

All symmetry determinations looking N.W. with S2 dipping S.W. with dip azimuth 220.

Total Depth: 463.0'

Purpose: _____

Logged by: D.J.H Date(s) Logged: _____

Drilling Contractor: A.D.D.

Core:

Size	From	To
N.Q.	25.0'	463.0'

Collar Cased and Capped: ____

Started: _____ Completed: _____

Cyprus Anvil Mining Corp.

Diamond Drill Core Log

DDH V-01-R

Code	Drillhole	Elevation	Northing	Easting	Comments
1	2 8	10 16	17 24	25 32	34 48
T	V-01-R	1135.2	9034091.4	5938801.7	FEET

Code	Drillhole	Depth	Zenith Angle	True Azimuth	Comments
1	2 8	10 14	22 26	28 32	34 56
R	V-01-R	0 0	189.0	.	AT COLLAR
R	V-01-R	1450	176.0	350.0	AC/D ZEM=178° @147'
R	V-01-R	2450	176.0	348.0	AC/D ZEM=178° @265'
R	V-01-R	3450	173.0	351.0	
R	V-01-R	4450	168.5	308.0	AC/D ZEM=173° @447'
R		.	.	.	
R		.	.	.	
R		.	.	.	
R		.	.	.	
R		.	.	.	
R		.	.	.	
R		.	.	.	
R		.	.	.	
R		.	.	.	
R		.	.	.	
R		.	.	.	

Code	Drillhole	Comments, Errant Remarks, Snivellings and/or Lewd Suggestions
1	2 8	10 47

DDH V-01-R (2 … 8)

Cyprus Anvil Mining Corp.

Lithologic Log

Logged By: DJH

Code	From	To	Unit	Code	Description
1	10 14	16 20	22 23	25 27	
L	100	1250	11	#1	triconed - no core
L	1250	1380	12		heavily weathered - impossible to
					determine lith; 4.5' core rec.;
L	1380	1480	13	4G4	honey sph.
L	1480	1575	14	4E4	"vuggy"
L	1575	1880	15	4A0	badly broken core
L	1880	1930	16	4G4	honey sph.
L	1930	1/0174	17	4L3	
L	1/0174	1/1174	18	0Q0	w/ 20% 4L3
L	1/1174	1/5170	19	5A0	post D2 breccia & gouge zone; 15' core rec.
L	1/5170	1/7170	110	5A0	
L	1/7170	1/9125	111	5A0	as unit 9; minor re-drilled massive sdes.
L	1/9125	12/110	112	5A0	minor re-drilled massive sdes; no core
					202-208
L	12/110	12/190	113	5A0	as units 9 & 11
L	12/190	12/2195	114	5A0	
L	12/2195	12/4143	115	5A0	50% gouge
L	12/4143	12/7/15	116	5B6	
L	12/7/15	12/9130	117	5B2	→ 5B23
L	12/9130	13/0137	118	5A3	
L	13/0137	13/4222	119	5B2	→ 5B23
L	13/4222	13/5170	210	5A3	
L	13/5170	13/6193	211	5A6	frequent zones of gouge & broken core
L	13/6193	13/9190	212	5A0	weakly calc.
L	13/9190	14/0108	213	5A0	gouge & breccia zone
L	14/0108	14/0187	214	5DA	60:40 5D3 (chl. mottled var.) : 5A0
L	14/0187	14/3165	215	5A6	
L	14/3165	14/4106	216	5B0	extremely calc.
L	14/4100	14/5103	217	5A3	v. calc.
L	14/5103	14/6106	218	5B7	→ 5B76
L	14/6106	14/6306	219	5B7	→ 5B76 w/ 50% 0Q0 infilling
					breccia frags.
		EOH			

DDH V-01-R (2 / 8)

Cyprus Anvil Mining Corp.
Structural Log

Logged By: DJH

Code	From	To	Feature	Sym	S_1 Dip	S_1 Direct.	S_2 Dip	S_2 Direct.	Description
	10 14	16 20	22 24	26	28 32		34 38		
S		12150	IF12	R					R region 25.0 - 58
S		14150	P1S12				42	2120	
S		15180	IF12	R					Z region 58 - 69
S		16100	C1S12				61	2120	
S		16190	IF12	S					S region 69 - 81
S		17190	C1S12				72	2120	
S		18100	IF12	Z					Z region 81 - 125.5
S		19175	C1S12				513	2120	
S		11150	C1S12				72	2120	
S		12155	IF12	Z					Breccia zone 125.5 - 157.0
									-no S2 measurements
S		15170	IF12	S					S region ~~125~~. 157.0 - 170.5
S		15190	C1S12				510	2120	
S		17105	IF12	Z					Z region 170.5 - 209
S		17160	C1S12				515	2120	(minor breccia)
S		19160	C1S12				416	2120	
S		21019	IF12	Z			319	2120	
S		21217	IF12	P			515	2120	PS2 209 - 227
S		21416	C1S12				516	2120	Z region 227 - 250
S		21510	IF12	S					S region 250 - 262
S		21518	C1S12				518	2120	
S		21612	IF12	Z					Z region 262 - 275.5
S		21618	C1S12				612	2120	
S		21715	IF12	S					S region 275.5 - 278.0
S		21718	IF12	S					DD. region 278.0 - 295.5
S		21811	C1S12				514	2120	
S		21915	IF12	D			710	2120	S region 295.5 - 332.0
S		31014	C1S12				610	2120	
S		31116	C1S12				517	2120	
S		31312	IF12	S			518	2120	PS2 region 332.0 - 345.0
S		31415	IF12						S region 345.0 - 358.0
S		31510	C1S12				418	2120	
S		31518	IF12	Z					Z region 358.0 - 373.0
S		31619	C1S12				516	2120	(grad. to PS2)
S		31713	IF12	Z					PS2 region 373.0 - 380.0
S		31813	IF12	P			417	2120	S region 380 - 387.0

DDH V-01-R (2 / 8)

Cyprus Anvil Mining Corp.
Structural Log

Logged By: _____

Code	From	To	Feature	sym	S_1 Dip Direct.	S_2 Dip Direct.	Description
	10 14	16 20	22 24	26	28 32	34 38	
S		131870	IF2	E			Z region 387 – 399.0
S		131930	CIS2			27 2210	
S		131990	IF2	3			S region 399.0 – 440
S		141090	CIS2			50 2210	
S		141230	CIS2			49 2210	
S		141370	CIS2			318 2210	
S		141400	IF2	S			PS2 region + minor breccia
S		141480	PIS2			56 2210	and post D2 kinks
S		141600	PIS2			43 2210	440 – 463
		IFOW					

DDH V-91-R (2 8)

Cyprus Anvil Mining Corp.
Geochemical Log (Sampler's Copy)

Logged By: DJH.

Sampled By:

Code	From	To	Sample No.	Description		
1	10 14	16 20	22 27	UNIT	LENGTH	REC.
P	1250	1380	114716	?	13.0	4.5
P	1380	1430	114717	4G4	5.0	3.6
P	1430	1480	114718	4G4	5.0	5.0
P	1480	1530	114719	4E4	5.0	5.0
P	1530	1575	114810	4E4	4.5	3.0
P	1575	1670	114811	4AO	9.5	5.9
P	1670	1730	114812	4AO	6.0	5.1
P	1730	1780	114813	4AO	5.0	5.0
P	1780	1830	114814	4AO	5.0	5.0
P	1830	1880	114815	4AO	5.0	5.0
P	1880	1930	114816	4G4	4.0	4.0
P	1930	1980	114817	4L3	5.0	5.0

CYPRUS ANVIL MINING CORPORATION

DIAMOND DRILL CORE LOG

Hole Number: V-26-R

Project: VANGORDA

Location: VANGORDA PLATEAU

Claim: _____

Terr. Plane Co-ords.: _____ N

_____ E

Grid Co-ords.: _____

_____

Elevation: _____

Fabric Orientation Diagram:

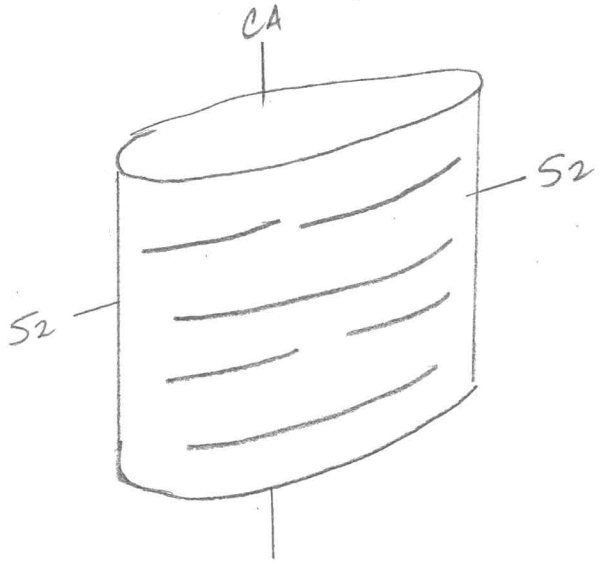

All symmetry determinations looking

N.W. with S2 dipping

S.W. with dip azimuth 220.

Total Depth: 484.0'

Purpose: _____

Logged by: D.J.H. Date(s) Logged: _____

Drilling Contractor: A.D.D.

Core:

Size	From	To
N.Q.	42.0'	484.0'

Collar Cased and Capped: ____

Started: _____ Completed: _____

Cyprus Anvil Mining Corp.
Diamond Drill Core Log

DDH V-26-R
(2–8)

Code	Drillhole	Elevation	Northing	Easting	Comments
1	2–8	10–16	17–24	25–32	34–48
T	V-26-R	1139.49	9034341.9	5939261.0	FEET

Code	Drillhole	Depth	Zenith Angle	True Azimuth	Comments
1	2–8	10–14	22–26	28–32	34–56
R	V-26-R	0	180.0		AT COLLAR
R	V-26-R	1600	178.3	343.0	AC/ID ZEN=179° @ 2018'
R	V-26-R	2600	177.3	275.0	
R	V-26-R	3600	176.6	197.0	AC/ID ZEN=176° @ 3718'
R	V-26-R	4600	174.5	233.0	AC/ID ZEN=175° @ 4618'
R					
R					
R					
R					
R					
R					
R					
R					
R					
R					

Code	Drillhole	Comments, Errant Remarks, Snivellings and/or Lewd Suggestions
1	2–8	10–47

DDH V-26-R (2 8)

Cyprus Anvil Mining Corp.

Lithologic Log

Logged By: D.J.H.

Code	From	To	Unit	Code	Description
1	10 14	16 20	22 23	25 27	
L	1 1 10 0	1 14 20	1/	#1	triconed - no core
L	1 14 20	1 15 1/0	12	5B16	? heavily weathered
L	1 15 1/0	1 19 5 6	13	5B16	
L	1 19 5 6	1 19 9 0	14	4K10	→ 4L1 locally w/ "cherty" looking lams.;
	1 1 1	1 1 1	1	1 1	looks like 5D6 @ top of int.; no sdes
L	1 19 9 0	1/10 5 2	15	4A10	± reddish sph
L	1/10 5 2	1/1/4 6	16	4A4	
L	1/1/4 6	1/4 15 4	17	4A10	v. minor Pb+Zn; < 5% tot sdes (py)
L	1/4 15 4	1/6 15 0	18	4A10	~5% Pb+Zn (reddish sph)
L	1/6 15 0	1/7 12 6	19	4G4	non calc.;
L	1/7 12 6	1/8 14 5	110	5B12	→ 5B26
L	1/8 14 5	1/9 17 0	1/1	5B17	→ 5B76; 1' bxia w/ sde frags @ start
	1 1 1	1 1 1	1	1 1	of int
L	1/9 17 0	12 10 0 7	112	4L10	minor py/po/sph; white mica increasing
	1 1 1	1 1 1	1	1 1	along int.
L	12 10 0 7	12 1/1 0	113	4G4	w/ minor 4E8; weakly calc.
L	12 1/1 0	12 1/5 1	114	4H1	→ 4H12; w/ minor 4G4
L	12 1/5 1	12 1/7 3	115	4G4	weakly calc.
L	12 1/7 3	12 21 7 6	116	4K10	carb = calcite; not typ 4K breccia
L	12 21 7 6	12 3 7 5	117	4G4	w/ minor 4E8; non calc.
L	12 3 7 5	12 4 7 8	118	4K10	as unit 16
L	12 4 7 8	12 5 4 3	119	4E1	→ 4E8 locally
L	12 5 4 3	12 6 8 1	210	4C3	~40% py
L	12 6 8 1	12 7 1 4 0	21	4L10	minor sdes
L	12 7 1 4 0	12 7 1 6 2	212	4J4	nearly mass. sph.
L	12 7 6 2	12 8 6 0	213	4C4L	70:30 4C3:4L16; ~25% py;
L	12 8 6 0	13 0 2 2	214	4K1	→ 4L16; minor 4L7 & 5D3
L	13 0 2 2	13 1/6 0	215	4L16	v. minor po
L	13 1/6 0	13 2 7 0	216	4L10	minor po
L	13 2 7 0	13 4 3 7	217	4A4L	60:40 4A0:4L0 w/ minor sdes;
	1 1 1	1 1 1	1	1 1	4A0 → 5A1 locally
L	13 4 3 7	13 5 0 0	218	4L10	minor po
L	13 5 0 0	13 5 4 4	219	4L4A	70:30 4L7:4A0
L	13 5 4 4	13 8 6 5	310	4L13	→ 4L31; w/ "cherty" sil. lams.
L	13 8 6 5	14 0 1 0 0	31	4L10	weakly "altered"
L	14 0 1 0 0	14 0 3 8	312	4C17	4L7?; "cherty" looking.

DDH V-26-R (2 … 8)

Cyprus Anvil Mining Corp.
Lithologic Log

Logged By: DJH

Code	From	To	Unit	Code	Description
1	10 14	16 20	22 23	25 27	
L	14013 8	14018 0	313	41AL	50:50 4A7(→5A9) : 4LO
L	14018 0	14117 0	314	4K17	~15% po
L	14117 0	14131 8	315	4C17	4L17? ; w/ 20% 4A7
L	14131 8	14814 0	316	5D1/	"cherty" lams ; minor 5D3 ; possibly a 4L variant unseen thus far.
		1E10H.			

DDH V-26-R (2 / 8)

Cyprus Anvil Mining Corp.

Structural Log

Logged By: DJH.

Code	From	To	Feature	Sym	S_1 Dip Direct.	S_2 Dip Direct.	Description
	10 14	16 20	22 24	26	28 32	34 38	
S		1420	IF12	D			D.D. region 42.0 - 84.5
S		1470	CIS12			7142120	
S		1670	CIS12			7142120	
S		1845	IF12	D		7162120	S region 84.5 - 102.0
S		11020	IF12	E		8112120	Z region 102.0 - 116.0
S		11160	IF12	3		7172120	S region 116.0 - 126.0
S		11260	IF12	E		8142120	Z region 126.0 - 165.0
S		11460	CIS12			7132120	
S		11650	IF12	Z		5102120	R region 165.0 - 173.0
S		11730	IF12	R			S region 173.0 - 184.5
S		11845	IF12			6192120	
							Bxia zone 184.5 - 191.5 (no reliable S2)
S		11915	IF12	Z		7102120	Z region 191.5 - 201.0
S		12010	IF12	Z			R region 201.0 - 310.5
S		12110	PIS12			6152120	
S		12310	PIS12			7172120	
S		12490	PIS12			8102120	
S		12690	PIS12			6182120	
S		12880	PIS12			6132120	
S		13105	IF12	R		7182120	S region 310.5 - 328.6
S		13286	IF12	E		7192120	Z region 328.6 - 344.0
S		13440	IF12	3		6102120	S region 344.0 - 367.0
S		13670	IF12	S		6172120	M region 367.0 - 416
S		13880	CIS12			7132120	
S		14080	CIS12			8162120	
S		14160	IF12	M			PS2 region 416 - 484
S		14290	PIS12			712120	(post D2 kinks 458-484)
S		14490	PIS12			6122120	
S		14690	PIS12			7182120	
S		14840	IF12	P			
		EOH					

DDH V-26-R (2 8)

Cyprus Anvil Mining Corp.
Geochemical Log (Sampler's Copy)

Logged By: DJH

Sampled By:

Code	From	To	Sample No.	Description		
1	10 14	16 20	22 27	UNIT	LENGTH	REC.
P	1 1910	1 1015 2	1 1/13517	4AO	6.2	6.2
P	1 1015 2	1 1 100	1 1/13518	4A4	4.8	4.8
P	1 1 100	1 1 146	1 1/13519	4A4	4.6	4.6
P	1 1 146	1 1200	1 1/13610	4AO	5.4	5.4
P	1 1200	1 1250	1 1/13611	4AO	5.0	5.0
P	1 1250	1 1300	1 1/13612	4AO	5.0	5.0
P	1 1300	1 1350	1 1/13613	4AO	5.0	5.0
P	1 1350	1 1400	1 1/13614	4AO	5.0	5.0
P	1 1400	1 1454	1 1/13615	4AO	5.4	5.4
P	1 1454	1 1500	1 1/13616	4AO	4.6	4.6
P	1 1500	1 1550	1 1/13617	4AO	5.0	5.0
P	1 1550	1 1600	1 1/13618	4AO	5.0	5.0
P	1 1600	1 1650	1 1/13619	4AO	5.0	5.0
P	1 1650	1 1685	1 1/13710	4G4	3.5	3.5
P	1 1685	1 1726	1 1/13711	4G4	4.1	4.1
P	1 1970	1 2007	1 1/13712	4LO	3.7	3.7
P	1 2007	1 2060	1 1/13713	4G4	5.3	5.3
P	1 2060	1 2110	1 1/13714	4G4	5.0	5.0
P	1 2110	1 2151	1 1/13715	4H1	4.1	4.1
P	1 2151	1 2173	1 1/13716	4G4	2.2	2.2
P	1 2173	1 2223	1 1/13717	4KO	5.0	5.0
P	1 2223	1 2276	1 1/13718	4KO	5.3	5.3
P	1 2276	1 2326	1 1/13719	4G4	5.0	5.0
P	1 2326	1 2375	1 1/13810	4G4	4.9	4.9
P	1 2375	1 2425	1 1/13811	4KO	5.0	5.0
P	1 2425	1 2478	1 1/13812	4KO	5.3	5.0
P	1 2478	1 2543	1 1/13813	4E1	6.5	6.5
P	1 2543	1 2590	1 1/13814	4C3	4.7	4.7
P	1 2590	1 2640	1 1/13815	4C3	5.0	5.0
P	1 2640	1 2681	1 1/13816	4C3	4.1	4.1
P	1 2681	1 2740	1 1/13817	4LO	5.9	5.9
P	1 2740	1 2762	1 1/13818	4J4	2.2	2.2
P	1 2762	1 2810	1 1/13819	4CL	4.8	4.8
P	1 2810	1 2860	1 1/13910	4CL	5.0	5.0
P	1 2860	1 2910	1 1/13911	4L1	5.0	5.0
P	291.0	296.0	1392	4L1	5.0	5.0
P	296.0	302.2	1393	4L1	6.2	5.5

DDH V-26-R (2 8)

Cyprus Anvil Mining Corp.
Geochemical Log (Sampler's Copy)

Logged By: DJH.

Sampled By:

Code	From	To	Sample No.	Description		
1	10 14	16 20	22 27	UNIT	LENGTH	REC.
P	A0100	A0138	1/1394	4C7	3.8	3.8
P	A0138	A0180	1/1395	4AL	4.2	4.2
P	A0180	A1130	1/1396	4L7	5.0	5.0
P	A1130	A1170	1/1397	4L7	4.0	4.0
P	A1170	A2120	1/1398	4C7	5.0	5.0
P	A2120	A2170	1/1399	4C7	5.0	5.0
P	A2170	A3118	1/1400	4C7	4.8	4.8

CYPRUS ANVIL MINING CORPORATION

DIAMOND DRILL CORE LOG

Hole Number: V-27-R

Project: VANGORDA

Location: VANGORDA PLATEAU

Claim: _____

Terr. Plane Co-ords.: _____ N

_____ E

Grid Co-ords.: _____

_____

Elevation: _____

Total Depth: 497.0

Fabric Orientation Diagram:

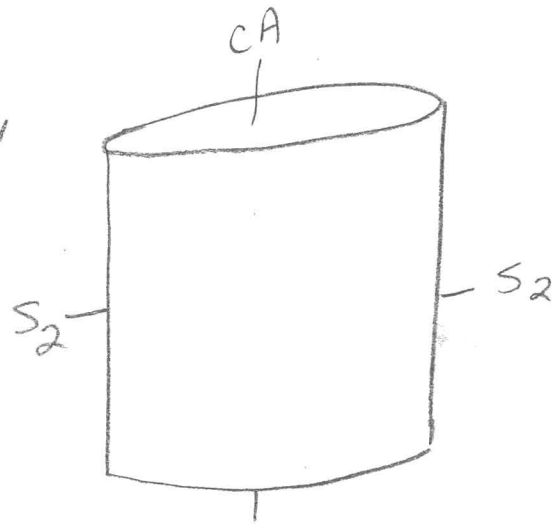

All symmetry determinations looking NW with S2 dipping SW with dip azimuth 220.

Purpose: _____

Logged by: JWM Date(s) Logged: _____

Drilling Contractor: A.D.D

Core: Size From To Collar Cased and Capped: ____

_____ _____ _____

_____ _____ _____

_____ _____ _____

Started: _____ Completed: _____

Cyprus Anvil Mining Corp.

Diamond Drill Core Log

DDH V1-27-R1

2 and CC 8

Code	Drillhole	Elevation	Northing	Easting	Comments
1	2 8	10 16	17 24	25 32	34 48
T	V1-27-R1	11146.85	9034732.2	5939814.3	FEET

Code	Drillhole	Depth		Zenith Angle		True Azimuth		Comments
1	2 8	10	14	22	26	28	32	34 56
R	V1-27-R1	0	0	180.0				ATCOLLAR
R	V1-27-R1	79	0	178.3		160.0		
R	V1-27-R1	179	0	175.3		113.0		ACID ZEN=178° @ 101'
R	V1-27-R1	279	0	170.6		097.0		ACID ZEN=170° @ 298'
R	V1-27-R1	379	0	168.0		099.0		
R	V1-27-R1	479	0	162.5		092.0		
R				.		.		
R				.		.		
R				.		.		
R				.		.		
R				.		.		
R				.		.		
R				.		.		
R				.		.		
R				.		.		
R				.		.		

Code	Drillhole	Comments, Errant Remarks, Snivellings and/or Lewd Suggestions
1	2 8	10 47

DDH V-27-R (2 8)

Cyprus Anvil Mining Corp.

Lithologic Log

Logged By: IWM

Code	From	To	Unit	Code	Description
1	10 14	16 20	22 23	25 27	
L	1100	1202	01		TRICONED - NO CORE
L	1202	1390	02	5B6	→ 4L6 weathered 5B6
L	1390	1483	03	4L6	
L	1483	1500	04	0Q0	
L	1500	1528	05	5B6	2
L	1528	1559	06	5D3	
L	1559	1703	07	4L0	→ 4L3
L	1703	1785	08	4L3	
L	1785	1850	09	5B6	grey phyllite.
L	1850	1883	10	4L0	
L	1883	1925	11	5B6	→ 4L6
L	1925	1970	12	5C6	Z·Rk. texture.
L	1970	1990	13	4A0	
L	1990	1018	14	5C0	
L	1018	1053	15	5B0	- 20-30% QQ throughout.
L	1053	1478	16	5B0	5 Variably calcareous. locally to 5B7
					+4L6 - good grey phyllite.
L	1478	1616	17	5B6	5 well banded with good first
					phase preservation throughout.
					not pervasive S2
L	1616	1910	18	5B7	structure as in unit 17
L	1910	1980	19	5C0	Z·Rk. prob logged as 5D before
L	1980	1985	20	5B0	
L	1985	2010	21	0B0	
L	2010	2046	22	5C0	As in unit 19
L	2046	2210	23	4A0	→ 4A4
L	2210	2248	24	4L4	
L	2248	2298	25	4G0	K Variably calcareous
L	2298	2304	26	4L3	
L	2304	2324	27	4G0	→ 4GL
L	2324	2360	28	4A0	→ 4A4
L	2360	2400	29	4L3	
L	2400	2416	30	4G0	K
L	2416	2613	31	4L0	→ 4L3
L	2613	2688	32	4A0	
L	2688	2680	33	4E0	calcareous.

DDH V-27-R (2 8)

Cyprus Anvil Mining Corp.
Lithologic Log

Logged By: JWM

Code	From	To	Unit	Code	Description
1	10 14	16 20	22 23	25 27	
L	2168 0	2184 5	3 4	4 A 1 0	
L	2184 5	2185 5	3 5	4 E 1 C	D
L	2185 5	2187 0	3 6	4 G 1 0	8 Variably calcareous
L	2187 0	3P10 2	3 7	4 E 1	1 → locally to 4C0
L	3100 2	3110 0	3 8	4 C 1 0	→ 4L1
L	3V00 0	3V15 2	3 9	4 E A	1
L	3115 2	3B00 0	4 0	4 L 1 0	→ 4L3
L	3200 0	3212 4	4 1	5 D 1 0	
L	3212 4	3996	4 2	4 L 1 6	1 typical 4L6 - Folia form po Variably calcareous - locally.
L	3996	4101 2	4 3	0 Q 1 0	
L	4101 2	AA67	4 4	4 L 6	1 - as in unit 42, less altered → 586
L	AA57	4516	4 5	5 B 7	
L	4516	4970	4 6	5 B 6	- locally tuffaceous.
		EOH			

DDH V-27-R (2 / 8)

Cyprus Anvil Mining Corp.
Structural Log

Logged By: JWM

Code	From	To	Feature	Sym	S_1 Dip Direct.	S_2 Dip Direct.	Description
	10 14	16 20	22 24	26	28 32	34 38	
S		1240	PS12			65 2210	
S		1425	PS12	A		74 2210	
S		1505	PS12			76 2210	
S		1640	CS12	S		65 2210	S region 42.5 - 64.0
S		1780	PS12	R		60 2210	4L
S		1880	CS12	S		60 2210	S region 78-88
S		1990	PS12	R		62 2210	4L + 4A
S		2102	S12	D			99-102 Down Dip region
S		2114	PS12	Z		56 2210	Z region 102-119
S		2135	PS12	M		45 2210	M region 114.0-133.5
S		2190	CS12	E		67 2210	
S		2153	CS12	Z			Z region 149.0-153.0
S		2163	CS12	P		55 2210	
S		2172	PS12	S		55 2210	S region 163.0 172.0
S		2182	PS12			55 2210	
S		2192	PS12			55 2210	
S		2207	PS12	P		53 2210	One Z symm. observed
							at 190
S		2218	CS12	M		56 2210	M region 207.5 - 218.0
S		2238	PS12			52 2240	
S		2249	PS12			56 2210	
S		2263	PS12	Z		57 2210	218.0 263.0 - possibly
							a Z region - but not
							enough observed symm.
							to say definitely.
S		2268	PS12			65 2210	
S		2271	PS12	S		75 2210	S symm. 263-271
S		2290	S12			85 2220	
S		3018	S12			78 2240	
S		3230	S12	R		75 2210	Sulfides + 4L
S		3360	PS12	S		65 2210	S symm. 323.0 336.0
S		3560	PS12			75 2210	
S		3660	PS12			54 2210	
S		3860	PS12			65 2210	
S		3970	PS12	A		70 2210	
S		4030	PS12	S		72 2210	S region 397.0 403.0

DDH J-27-R (2 8)

Cyprus Anvil Mining Corp.
Structural Log

Logged By: JWM

Code	From	To	Feature	Sym	S_1 Dip Direct.	S_2 Dip Direct.	Description
	10 14	16 20	22 24	26	28 32	34 38	
S		4180	PS 2			55 210	
S		4280	PS 2			70 220	
S		4480	PS 2	P		60 210	
S		4510	PS 2	M		70 220	M region 448.0 - 451.0
S		4580	PS 2			65 210	
S		4680	PS 2	P		70 210	
S		4880	PS 2			65 210	
S		4970	PS 2			75 210	

DDH V-27-R (2 / 8)

Cyprus Anvil Mining Corp.

Geochemical Log (Sampler's Copy)

00

Logged By: JWM

Sampled By:

Code	From	To	Sample No.	Description		
1	10 14	16 20	22 27	UNIT	LENGTH	REC.
P	1970	1990	136108	4AO	2.0	1.9
P	20476	21100	136109	4AO	5.4	5.4
P	21100	21150	136110	4AO	5.0	5.0
P	21150	21200	136111	4AO	5.0	5.0
P	21200	21248	136112	4L4	4.8	4.8
P	21248	21298	136113	4GOK	5.0	5.0
P	21298	23104	136114	4L3	0.6	0.6
P	23104	23124	136115	4G/4L	2.0	0.9
P	23124	23160	136116	4AO	3.6	3.6
P	23160	24100	136117	4L3	4.0	4.0
P	24100	24116	136118	4GO/K	1.6	1.6
P	24613	24668	136119	4AO	5.5	5.0
P	24668	27110	136120	4AO	4.2	4.2
P	27110	27160	136121	4AO	5.0	5.0
P	27160	28100	136122	4AO	4.0	3.6
P	28100	28455	136123	4AO	4.5	4.5
P	28455	28700	136124	4G08	1.5	1.5
P	28700	29300	136125	4E1	6.0	6.0
P	29300	29990	136126	4E1	6.0	6.0
P	29990	30500	136127	4EC	6.0	6.0
P	30500	31100	136128	4CO	5.0	5.0
P	31100	31522	136129	4EA	5.2	5.2
P	31522	32000	136130	4LO	4.8	4.8

CYPRUS ANVIL MINING CORPORATION

DIAMOND DRILL CORE LOG

Hole Number: V-143-R

Project: VANGORDA

Location: VANGORDA PLATEAU

Claim: _____

Terr. Plane Co-ords.: _____ N

_____ E

Grid Co-ords.: _____

_____

Elevation: _____

Total Depth: 426.0'

Fabric Orientation Diagram:

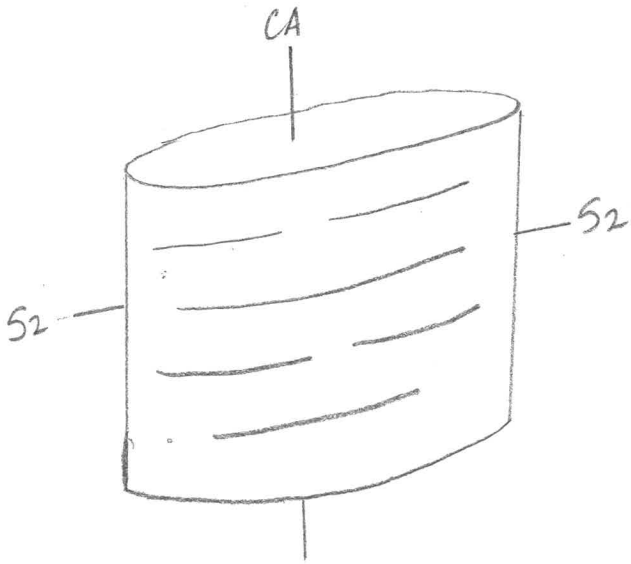

All symmetry determinations looking

N.W. with S2 dipping

S.W. with dip azimuth 220.

Purpose: _____

Logged by: J.W.M. Date(s) Logged: _____

Drilling Contractor: A.D.D.

Core:

Size	From	To
N.Q.	27.5	426.0

Collar Cased and Capped: _____

Started: _____ Completed: _____

Cyprus Anvil Mining Corp.
Diamond Drill Core Log

DDH V-143-R (2 / 8)

Code	Drillhole	Elevation	Northing	Easting	Comments
1	2 8	10 16	17 24	25 32	34 48
T	V-143-R	11512.74	9034891.1	594005.8	FEET

Code	Drillhole	Depth	Zenith Angle	True Azimuth	Comments
1	2 8	10 14	22 26	28 32	34 56
R	V-143-R	0 0	180.0	.	ATCOLLAR
R	V-143-R	1090	1716.0	0781.0	
R	V-143-R	2090	1711.5	0446.E	
R	V-143-R	3090	1691.8	0811.0	
R	V-143-R	4090	1671.0	0691.E	
R		.	.	.	
R		.	.	.	
R		.	.	.	
R		.	.	.	
R		.	.	.	
R		.	.	.	
R		.	.	.	
R		.	.	.	
R		.	.	.	
R		.	.	.	
R		.	.	.	

Code	Drillhole	Comments, Errant Remarks, Snivellings and /or Lewd Suggestions
1	2 8	10 47

DDH V-143-R (2–8)

Cyprus Anvil Mining Corp.
Lithologic Log

Logged By: WM

Code	From	To	Unit	Code	Description
1	10–14	16–20	22 23	25 27	
L	00	275	01	#	TRICONED - NO CORE
L	275	324	02	5B6	4 minor sulfides - technicaly 4L
L	324	345	03	4L1	4 "gtz eye texture"? intersection
					variably calc. should be split.
L	345	361	04	4L7	normal variant of 4L7
L	361	498	05	4L6	20% 5B towards begining of
					interval.
L	498	812	06	4L3	
L	812	920	07	5B4	(not WME) → 4L6
L	920	1160	08	4L6	7 → 4L3 locally
L	1160	1180	09	4L5	
L	1180	1275	10	4L6	
L	1275	1838	11	4L6	→ 5B7 appears as a very weak
					alteration of 5B7, po+py
					throughout interval, locally biotitic
L	1838	2039	12	4A0	overall Pb+Zn ≈ 2-4%
L	2039	2373	13	4L6	as in unit 11, same tuffaceous
					character.
L	2373	2514	14	4L0	→ 4L6
L	2514	2728	15	5B4	(not WME) → 4L6 po+py
L	2728	2752	16	5A9	(split)
L	2752	2770	17	5A9	As in unit 16, less sulfides.
L	2770	2790	18	4EK8	Silica clasts, + fragments of calcite?
					distinctive marker rock.
L	2790	2870	19	4A4	
L	2870	2910	20	5B6	2
L	2910	3051	21	4A0	
L	3051	3250	22	5A9	→ 4L → 4A - prob altered
					5A9 - approaching 4A but silica
					deficeint. (not typical 5A9,
					could be taken as carb. 4L)
L	3250	3392	23	4L0	7 → 4L3
L	3392	3466	24	4L0	7 carbonaceous.
L	3466	3626	25	4L7	(4L6)
L	3626	3629	26	5D3	Zebra RK.
L	3629	3638	27	4L7	As in unit 25

DDH V-143-R (2 — 8)

Cyprus Anvil Mining Corp.
Lithologic Log

Logged By: JWM

Code	From	To	Unit	Code	Description
1	10 14	16 20	22 23	25 27	
L	31638	31660	21	8090	
L	31660	42160	29	5B6	minor variably calcareous intervals.
					- NOTE not typical chloritic phyllite of 586 -
					this interval contains biotitic intervals.
					"greyish-green" dominant colour.
		EOH			

DDH V-143-R (2 / 8)

Cyprus Anvil Mining Corp.
Structural Log

Logged By: JWM

Code	From	To	Feature	Sym	S_1 Dip Direct.	S_2 Dip Direct.	Description
	10 14	16 20	22 24	26	28 32	34 38	
S		1370	S2			515 2210	
S		1430	S2	P		614 2210	At 41.5 one Z symm.
S		1530	S2			610 2210	
S		1624	S2	S		710 2210	
S		1775	S2			610 2210	
S		1845	S2	R		710 2140	4L
S		1990	S2	Z		710 2210	
S		1996		S			
S		11115	CS2	S		712 2210	
S		11130	CS2	M		612 2240	
S		11190	CS2	S		713 2210	
S		11343	CS2	Z		710 2140	
S		11450	S2	M		618 2210	
S		11690	S2	R		618 2210	4L+5B
S		11770	S2	S		715 2210	
S		11885	S2	M		615 2240	
S		12365	S2	S		614 2210	At 223.5 one Z symm.
S		12670	S2	R		810 2210	One S sym. at 236 } throughout interval.
							One Z sym at 240 }
S		12770	CS2	Z		716 2210	
S		12870	CS2			815 2210	
S		12970	CS2	S		810 2210	
S		13020	S2	Z			
S		13070	S2			718 2210	
S		13270	S2			710 2210	
S		13470	S2			615 2210	
S		13630	S2	S		712 2240	Two Z' det. one at 322' + one at 328'
S		13770	S2			518 2240	
S		13910	S2			710 2210	
S		14070	S2			610 2210	Two S det. throughout int.
S		14170	S2			715 2210	One at 397'
S		14240	S2	R		615 2210	" " 417'

DDH V-143-R (2 / 8)

Cyprus Anvil Mining Corp.
Geochemical Log (Sampler's Copy)

Logged By: WM

Sampled By:

Code	From	To	Sample No.	Description		
1	10 14	16 20	22 27	UNIT	LENGTH	REC.
P	1183	1189	310511	4AO	5.2	
P	1189	1940	310512	4AO	5.0	
P	1940	1990	310513	4AO	5.0	
P	1990	2039	310514	4AO	4.9	
P	2728	2770	310515	5A9	4.2	
P	2770	2820	310516	4E/A	5.0	
P	2820	2870	310517	4AO	5.0	
P	2910	2960	310518	4AO	5.0	
P	2960	3010	310519	4AO	5.0	
P	3010	3051	310520	4AO	4.1	

2E

Cyprus Anvil Mining Corp.
Diamond Drill Core Log

DDH V-133-R (2–8)

Code	Drillhole	Elevation	Northing	Easting	Comments
1	2–8	10–16	17–24	25–32	34–48
T	V-133-R	11501.04	9034651.6	5941041.4	FEET

Code	Drillhole	Depth	Zenith Angle	True Azimuth	Comments
1	2–8	10–14	22–26	28–32	34–56
R	V-133-R	0 0	1810.0	.	ATCOLLAR
R	V-133-R	1010 0	1781.0	0631.0	AIC/IDITIESITI
R	V-133-R	2010 0	1751.0	0631.0	AIC/IDITIESITI
R	V-133-R	3010 0	1751.0	0631.0	AIC/IDITIESITI
R	V-133-R	4010 0	1711.0	0631.0	AIC/IDITIESITI
R	V-133-R	4480	1671.0	0631.0	AIC/IDITIESITI
R		.	.	.	
R		.	.	.	
R		.	.	.	
R		.	.	.	
R		.	.	.	
R		.	.	.	
R		.	.	.	
R		.	.	.	
R		.	.	.	
R		.	.	.	

Code	Drillhole	Comments, Errant Remarks, Snivellings and/or Lewd Suggestions
1	2–8	10–47

DDH V-133-R

Cyprus Anvil Mining Corp.

Lithologic Log

Logged By: JWM

Code	From	To	Unit	Code	Description
1	10 14	16 20	22 23	25 27	
L	100	320	01	#1	@ casing
L	320	410	02	4L17	3 similar to upper 4L in V-115-R
L	410	480	03	5B16	9 similar to unit 02, but not as bleached.
L	480	5107	04	4L17	
L	5107	5443	05	5D14	minor po.
L	5443	690	06	5B16	" "
L	690	880	07	4L17	13 As in unit 2, typical 4L as logged in V-115-R overall greyish color, chlorite not conspicuous (sp?) interval contains abundant qtz-sweats+ pods minor apy.
L	880	10100	08	5B16	Slightly chloritic, minor po → some 4L in interval, overall 5B6
L	10100	10880	09	4L17	
L	10880	12333	10	5A10	minor py, po; last 2' of interval less graphite (bleached appearance)
L	12333	12440	11	5E10	
L	12440	13320	12	5D9	(po) → SF
L	13320	14220	13	5B16	1 (numerous qtz pods)
L	14220	14440	14	4L17	
L	14440	16120	15	5B6	(greyish green) → 4L
L	16120	16880	16	4L17	1
L	16880	21187	17	5B6	as in unit 15 minor 4L minor po QQO region 192-198, clotted bright green chlorite throughout. minor po-py.
L	21187	21633	18	5B10	calc as in unit 17 QQO 216.5-217.0'
L	21633	22257	19	5B16	1/4L increasing po content
L	22257	23323	20	4L67	7/5B6 216.3 → 232.3 transition zone 5B → 4L
L	23323	24077	21	4A10	→ 4A4 — (4A78)
L	24077	24566	22	4A10	Low Grade! minor po, minor py IT'S RAINING!
L	24566	26144	23	4A10	Zn rich, poor galena, localized (vein) 4F, well bounded, 248.5 - 251.5

DDH V-133-R

Cyprus Anvil Mining Corp.
Lithologic Log

Logged By: JWM

Code	From	To	Unit	Code	Description
L	2614	2830	24	4A0	Pb+Zn ≈ 2-5% minor po
					barren in certain intervals (Pb+Zn ≈ 2%)
					minor cpy,
L	2830	3030	25	4A0	/4L0 as above, increasing po,
					not as carbonaceous, lighter (overall
					in colour) still contains considerable
					graphite, slight increase in cpy.
L	3030	3115	26	4A0	as in unit 24, po increasing
L	3115	3150	27	4A0	/4L As in unit 25 minor chlorite,
					increasing silica
L	3150	3200	28	4L76	
L	3200	3355	29	5B6	very local development 4L
L	3355	3443	30	5D4	→ 4L
L	3443	3904	31	4L7	→ 4L76 minor (localized cpy)
					not worth splitting.
L	3904	4290	32	5B6	
L	4290	4425	33	5D0	
L	4425	4480	34	5B6	
		EOH			

DDH V-133-R

Cyprus Anvil Mining Corp.

Structural Log

Logged By: DJH

Code	From	To	Feature	Sym	S_1 Dip Direct.	S_2 Dip Direct.	Description
1	10 14	16 20	22 24	26	28 32	34 38	
S		1312.0	CIS12			710 220	S sym 32 - 61
S		1500	CIS12			617 220	
S		1610	IF12	E			Z sym 61 - 99
S		1710	CIS12			613 220	
S		1910	CIS12			712 220	
S		1990	IF12	Z			
S		1/110	CIS12			715 220	Ind. (Down Dip) 99.0 -
S		1/310	CIS12			715 220	149.0
S		1/490	IF12	Z			Z sym 149.0 - 169.0
S		1/580	CIS12			716 220	
S		1/690	IF12	S			S sym 169.0 - 192.0
S		1/790	CIS12			813 220	
S		1/920	IF12	S			Down Dip 192.0 - 202.0
S		1/960	CIS12			81/ 220	
S		2/020	IF12	S			S sym 202.0 - 245.0
S		2/160	CIS12			812 220	
S		2/350	CIS12			712 220	
S		2/450	IF12	E			Z sym 245.0 - 255.0
S		2/550	IF12	S		717 220	S sym 255.0 - 273.0
S		2/730	IF12	E		715 220	Z sym 273.0 - 288.0
S		2/880	IF12	S			S sym 288.0 - 390.0
S		2/930	CIS12			812 220	
S		3/080	CIS12			810 220	
S		3/280	CIS12			715 220	
S		3/460	CIS12			610 220	
S		3/660	CIS12			513 220	
S		3/900	IF12	S		617 220	Incip. Bxia 390.0 - 413
S		4/130	IF12	S		515 220	- no sym.
S		4/340	IF12	E		716 220	S sym 413 - 434.0
S		4/480	CIS12			710 220	Z sym 434 - 448 (EOH)
		EOH.					

DDH V-133-R

Cyprus Anvil Mining Corp.

Geochemical Log (Sampler's Copy)

Logged By:

Sampled By:

Code	From	To	Sample No.	Description		
1	10 14	16 20	22 27	REC.	UNIT	FOOTAGE
P	12312 3	12370	16311	4	4A0, 4A4	4.7
P	12370	12420	16312	5'	4A0, 4A4	5.0
P	12420	12470	16313	5'	4A0	5.0
P	12470	12520	16314	5'	4A0	5.0
P	12520	12570	16315	5'	4A0	5.0
P	12570	12620	16316	5'	4A0	5.0
P	12620	12670	16317	5'	4A0	5.0
P	12670	12720	16318	5'	4A0	5.0
P	12720	12770	16319	5'	4A0	5.0
P	12770	12820	16410	5'	4A0	5.0
P	12820	12870	16411	5'	4A0	5.0
P	12870	12920	16412	5'	4A0	5.0
P	12920	12970	16413	5'	4A0	5.0
P	12970	13020	16414	5'	4A0	5.0

CYPRUS ANVIL MINING CORPORATION

DIAMOND DRILL CORE LOG

Hole Number: V-300

Project: VANGORDA

Location: VANGORDA PLATEAU

Claim: _____

Terr. Plane Co-ords.: _____ N

_____ E

Grid Co-ords.: _____

_____

Elevation: _____

Total Depth: 520.0'

Fabric Orientation Diagram:

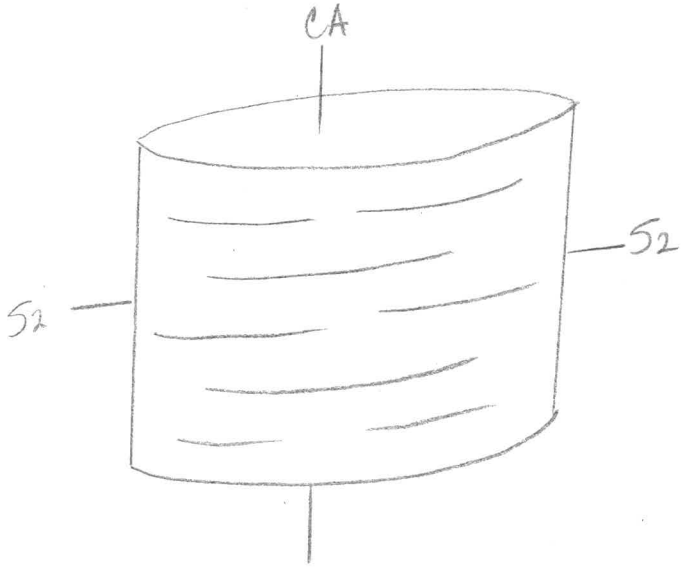

All symmetry determinations looking N.W. with S2 dipping S.W. with dip azimuth _____.

Purpose: _____

Logged by: J.W.M. Date(s) Logged: _____

Drilling Contractor: A.D.D.

Core: Size From To Collar Cased and Capped: _____

_____ 56.0' 520.0'

_____ _____ _____

_____ _____ _____

Started: _____ Completed: _____

Cyprus Anvil Mining Corp.
Diamond Drill Core Log

DDH V-300

Code	Drillhole	Elevation	Northing	Easting	Comments
1	2 8	10 16	17 24	25 32	34 48
T	V-300	1126.39	903344.4	593913.9	FEET

Code	Drillhole	Depth	Zenith Angle	True Azimuth	Comments
1	2 8	10 14	22 26	28 32	34 56
R	V-300	0 0	180.0	.	AT COLLAR
R	V-300	90	177.5	358.0	ACID ZEN=180° @88'
R	V-300	250 0	178.2	077.0	
R	V-300	380 0	177.3	156.0	ACID ZEN=176° @400'
R	V-300	510 0	174.1	163.0	ACID ZEN=174° @500'
R			.	.	
R			.	.	
R			.	.	
R			.	.	
R			.	.	
R			.	.	
R			.	.	
R			.	.	
R			.	.	
R			.	.	
R			.	.	

Code	Drillhole	Comments, Errant Remarks, Snivellings and /or Lewd Suggestions
1	2 8	10 47

DDH V-300 (2 — 8)

Cyprus Anvil Mining Corp.

Lithologic Log

Logged By: JWM

Code	From	To	Unit	Code	Description
1	10 14	16 20	22 23	25 27	
L	1100	1560	01	#	CASING
L	1560	1645	02	0D0	Suspect this is a boulder
					56-68- 5' Rec.
L	1645	1750	03	4A0	very carbonaceous. 68-72. 25' Rec.
L	1750	1980	04	4A0	not as carbonaceous as in unit 3,
					more siliceous than above. Pb+Zn ≈ 4%
					6%?
L	1980	11002	05	4G0	Pb+Zn ≈ 4-6%
L	11002	11090	06	4E6	massive pyrite with barite
					Pb+Zn = 4%?
L	11090	11107	07	4G0	as in unit 05
L	11107	11203	08	4A0	→ 4A4 as in unit 04
L	11203	11270	09	4E6	as in unit 06 120-127'-3' Rec.
L	11270	11330	10	5A0	
L	11330	11413	11	4L3	7 (WME)
L	11413	11460	12	4L7	
L	11460	11578	13	4L3	7 as in unit 11
L	11578	11594	14	5B6	/5A
L	11594	11630	15	4L3	7 as in unit 11,13 & 127-163
					is this an alteration of 5A?
					it appears that is the case here.
L	11630	11737	16	4E6	As in unit 6, 9
L	11737	11840	17	4L3	168-178 8' Rec
					178-194 5' Rec
L	11840	11908	18	4H8	oxidized.
L	11908	11924	19	4E0	
L	11924	11975	20	4L3	(7)
L	11975	12055	21	4L7	Last 2' int. 4L3, & gouge possible
					Fault?
L	12055	12095	22	4EK	minor carbonates.
L	12095	12105	23		gouge/clay
L	12105	12185	24	4L3	, core badly broken, possible gouge etc.
L	12185	12210	25	5D	- Zebra Critter
L	12210	12221	26	4L7	
L	12221	12230	27	5D4	Zebra Critter
L	12230	12570	28	4L7	No Cpy.

DDH V-300

Cyprus Anvil Mining Corp.
Lithologic Log

Logged By: JWM

Code	From	To	Unit	Code	Description
	10 14	16 20	22 23	25 27	
L	12570	12588	29	4C10	
L	12588	13040	30	4A10	/5A Pb+Zn ≯<2%
L	13040	13145	31	4L47	/4A7 unusual interval with 4L7 and 4A are "interbonded" where graphite increases, po decreases - & VICE VERSA minor splashes of cpy. 4L (good 4L) alteration of 4A or 5A or?
L	13145	13190	32	4L473	
L	13190	13400	33	4L47	/5D core badly broken
L	13400	13610	34	5B16	slightly altered throughout, absence of po grey - greyish green logged as 5B6 instead of 4L6
L	13610	13655	35	4L47	slightly calcareous
L	13655	13766	36	5B16	As in unit 34
L	13766	13810	37	4L475	
L	13810	13987	38	5B16	As in unit 34+36 gouge zone 397-398
L	13987	14388	39	4L475	Variably calcareous throughout interval. "Siliceous green"
L	14388	14600	40	5B16	
L	14600	15200	41	5D10	Last 5' increasing carbonates, considerable fine po over last 5' of interval. Very boring
		EOH			

DDH V-300 (2 / 8)

Cyprus Anvil Mining Corp.
Structural Log

Logged By: _____

Code	From	To	Feature	Sym	S_1 Dip Direct.	S_2 Dip Direct.	Description
	10 14	16 20	22 24	26	28 32	34 38	
S		1770			010		11 to CA
S		1750	CS2	S		75 220	S, 11 to CA 68-78'
S		1820	CS2	S		60 210	S symm 78-84
S		1850	CS2	E		75 220	E region 84-87.5
S		1980	CS2	Z		70 210	Z region 87.5-126
S		11060	CS2	Z		86 210	
S		11200	CS2	Z		68 220	
S		11320	CS2	S		75 220	
S		11380	PS2	S		80 210	
S		11480	PS2	S		80 220	
S		11580	PS2	S		74 220	
							178-184 BXA + some
							sponge-less S/S core.
							5' Rec.
S		20105	PS2			67 210	
S		21170	PS2			85 220	203.5-204.5 busted + gouged core.
S		23220	PS2	S		70 240	
S							
							S region 126-273
S		26470	PS2	S		58 220	M region (Z) 273-296.0
S		27180	PS2	M		60 220	S or PS2 to EOH
S		30330	PS2	S		55 220	
S		31170	PS2			50 220	
S		3318	PS2			64 220	
S		3516	PS2			50 220	
S		3710	PS2			64 220	
S		3911	PS2			60 220	
S		4110	PS2			80 220	
S		4128	PS2			72 220	
S		4415	PS2			75 220	
S		14618	PS2			86 220	
S		14917	PS2			84 220	
S		15112	PS2			78 220	
S		15210	PS2			84 220	

DDH V-300 (2 8)

Cyprus Anvil Mining Corp.

Geochemical Log (Sampler's Copy)

Logged By: JWM

Sampled By:

Code	From	To	Sample No.	Description		
1	10 14	16 20	22 27	REC	UNIT	FOOTAGE
F	1645	1690		NO CORE	4AO	4.5
P	1690	1740	V1 129011	5'	4AO	5.0
P	1740	1790	V1 129012	5'	4AO	5.0
P	1790	1840	V1 129013	5'	4AO	5.0
P	1840	1890	V1 129014	5'	4AO	5.0
P	1890	1940	V1 129015	4.2'	4AO	5.0
P	1940	1980	V1 129016	4.0'	4AO	4.0
P	1980	2030	V1 129017	4.8'	4E6/4E6	5.0
P	2030	2090	V1 129018	5'	4E6	6.0
P	2090	2140	V1 129019	4.7'	4E6/4A	5.0
P	2140	2203	V1 129110	6.0	4AO	6.3
P	2203	2270	V1 129111	2.5'	4E6	6.7
P	1630	1680	V1 129112	5.0	4E6	5.0
P	1680	1737	V1 129113	3.6'	4E6	5.7
P	1840	1890	V1 015999	5'	4H8	5.0
P	1890	1924	V1 016010	3.4	4E0	3.4
P	1924	1975	V1 016011	5.1	4L37	5.1
P	1975	2024	V1 016012	4.9	4L7	4.9
P	2065	2095	V1 016013	3.5	4EK	4.0
P	2570	2620	V1 016014	4.5	4AO	5.0
P	2620	2670	V1 016015	5.0	4AO	5.0
P	2670	2720	V1 016016	5.0	4AO	5.0
P	2720	2770	V1 016017	5.0	4AO	5.0
P	2770	2820	V1 016018	5.0	4AO	5.0
P	2820	2870	V1 016019	5.0	4AO	5.0
P	2870	2920	V1 016110	5.0	4AO	5.0
P	2920	2970	V1 016111	4.0	4AO	5.0
P	2970	3040	V1 016112	5.0	4AO	5.0
P	3040	3090	V1 016113	5.0	4AO/4L7	5.0
F	3090	3145	V1 016114	5.5	4L7/4A	5.5
P	3145	3200	V1 016115	5.5	4L7	5.5
P	3200	3250	V1 016116	5.0	4L7	5.0

CYPRUS ANVIL MINING CORPORATION

DIAMOND DRILL CORE LOG

Hole Number: V-311

Project: VANGORDA

Location: VANGORDA PLATEAU

Claim: _____

Terr. Plane Co-ords.: _____ N

_____ E

Grid Co-ords.: _____

_____

Elevation: _____

Fabric Orientation Diagram:

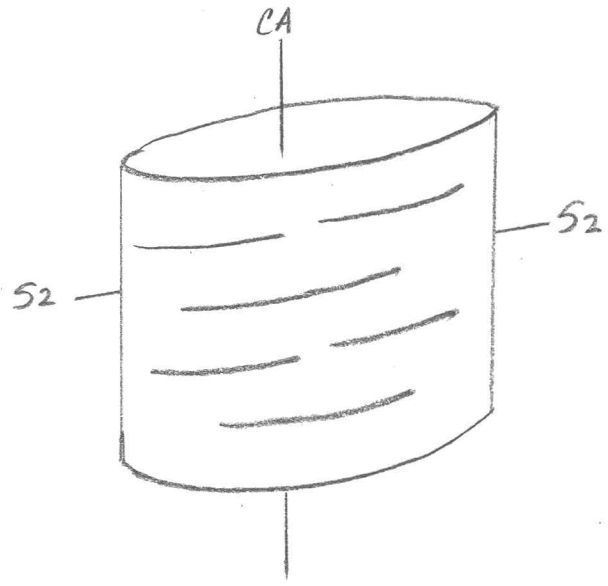

All symmetry determinations looking N.W with S2 dipping S.W. with dip azimuth 220.

Total Depth: 456.0'

Purpose: _____

Logged by: D.J.H. Date(s) Logged: _____

Drilling Contractor: A.D.D.

Core:

Size	From	To
N.Q.	87.5'	456.0'

Collar Cased and Capped: _____

Started: _____ Completed: _____

Cyprus Anvil Mining Corp.
Diamond Drill Core Log

DDH V-311

Code	Drillhole	Elevation	Northing	Easting	Comments
1	2 8	10 16	17 24	25 32	34 48
T	V-311	1126.06	903338.7	593900.4	FEET

Code	Drillhole	Depth		Zenith Angle		True Azimuth		Comments
1	2 8	10	14	22	26	28	32	34 56
R	V-311	0	0	180.		.		AT COLLAR
R	V-311	1540		179.	0	0233.	0	ACID ZEN=179° @148'
R	V-311	3540		178.	2	0633.	0	ACID ZEN=179° @275'
R	V-311	4540		172.	2	1673.	0	ACID ZEN=173° @428'
R				.		.		
R				.		.		
R				.		.		
R				.		.		
R				.		.		
R				.		.		
R				.		.		
R				.		.		
R				.		.		
R				.		.		
R				.		.		
R				.		.		

Code	Drillhole	Comments, Errant Remarks, Snivellings and/or Lewd Suggestions
1	2 8	10 47

DDH V-3111-8

Cyprus Anvil Mining Corp.
Lithologic Log

Logged By: DJH.

Code	From	To	Unit	Code	Description
1	10 14	16 20	22 23	25 27	
L	1 10 0	1 1817 5	1	#1	triconed - no core
L	1 1817 5	1 1391	2	5B16	→ 5B62; 0.5' 4EO between 88' & 98'
					core rec. 88-98 = 1.5'
					98-108 = 2.2'
					108-118 = 1.4'
					118-132 = 0'
					132-138 = 5.6'
L	1 1391	1 1412 3	3	5D16	
L	1 1412 3	1 1463	4	5B16	
L	1 1463	1 1617	5	4L10	w/ minor 4L3; minor py/po
L	1 1617	1 1675	6	4E18	→ 4E86; sph rich lams; Pb+Zn in $BaSO_4$ rich lams
L	1 1675	1 1813	7	4E18	w/ ~20% 4KO; $CO_3^=$ increasing towards base of int. (mag. decreasing)
L	1 1813	1 1948	8	4L10	minor py/po
L	1 1948	1 1960	9	4E1	
L	1 1960	1 1975	10	4A1B	70:30 interbanded 4A0:4B4
L	1 1975	12 0136	11	4L16	minor 4L0 @ start of int.; minor po throughout
L	12 0136	12 0169	12	5D13	
L	12 0169	12 3138	13	4L16	minor py/po dissem and fairly massive bands
L	12 3138	12 6114	14	5A10	variably calc.
L	12 6114	12 6180	15	4A17	
L	12 6180	12 7154	16	4L17	→ 4L71.
L	12 7154	13 6123	17	4L16	→ 4L0, 4L7 locally; minor po throughout
L	13 6123	13 8180	18	5B16	→ 5B69 (minor po); v. weakly altered if @ all
L	13 8180	14 2150	19	4L15	minor po; minor sericite alt'n
L	14 2150	14 5160	20	5B16	unaltered, no sdes
		EOH			

DDH V-3.1.1. (2 / 8)

Cyprus Anvil Mining Corp.
Structural Log

Logged By: DJH.

Code	From	To	Feature	Sym	S_1 Dip Direct.	S_2 Dip Direct.	Description
1	10 14	16 20	22 24	26	28 32	34 38	
S							tricored 0-87.5'
S		1875	C1S12			716 21210	S region 87.5 - 161.7
S		11018 0	C1S12			612 21210	↘ post Dz Kink folds
S		11313 0	C1S12			612 21210	
S		11513 0	C1S12			714 21210	
S		11617	1F12	S			R region 161.7 - 181.3
S		11735	P1S12			618 21210	
S		11813	1F12	R			Z region 181.3 - 190.7
S		11907	1F12	3		619 21210	S region 190.7 - 236.0
S		12017 5	C1S12			713 21210	
S		12218 0	C1S12			711 21210	
S		12316 0	1F12	Z			Z region 236.0 - 261.3
S		12415 0	C1S12			610 21210	
S		12613	1F12			910 21210	S region (generally speaking
S		12718 0	C1S12			716 21210	w/ minor P S2) 261.3 - 418.0
S		12918 0	C1S12			618 21210	
S		13117 0	C1S12			610 21210	
S		13317 0	C1S12			718 21210	
S		13518 0	C1S12			515 21210	
S		13715 0	C1S12			416 21210	
S		13917 5	C1S12			612 21210	
S		14118 0	1F12	S		711 21210	R region (w/ minor S)
S		14318 0	P1S12			718 21210	418.0 - 456.0
S		14516 0	P1S12			618 21210	
		1E101H					

DDH V-311 (2–8)

Cyprus Anvil Mining Corp.
Geochemical Log (Sampler's Copy)

Logged By: DJH

Sampled By:

Code	From	To	Sample No.	Description		
1	10–14	16–20	22–27	UNIT.	LENGTH	REC.
P	1617	1675	11158	4E86	5.8	3.6
P	1675	1730	1115A	4E8	5.5	4.6
P	1730	1780	11160	4E8	5.0	5.0
P	1780	1813	1116V	4E8	3.3	3.3
P	1948	1975	11162	4EA/B	2.7	2.6
P	2614	2680	11163	4A7	6.6	2.8

CYPRUS ANVIL MINING CORPORATION

DIAMOND DRILL CORE LOG

Hole Number: V-318

Project: VANGORDA

Location: VANGORDA PLATEAU

Claim: _____

Terr. Plane Co-ords.: _____ N

_____ E

Grid Co-ords.: _____

_____

Elevation: _____

Total Depth: 4660

Fabric Orientation Diagram:

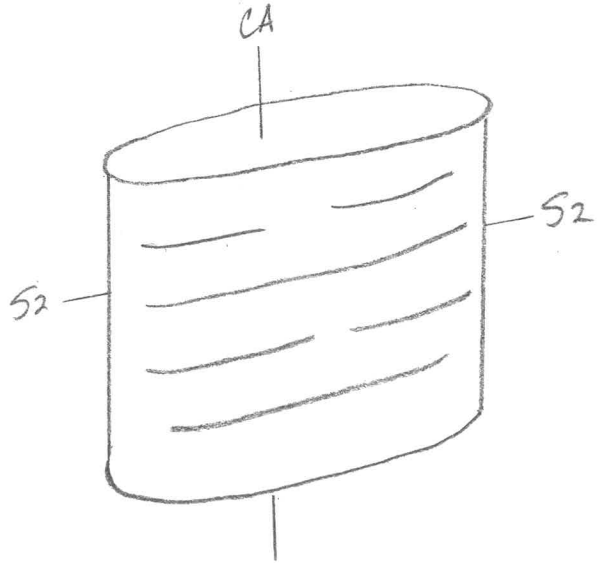

All symmetry determinations looking N.W. with S2 dipping S.W. with dip azimuth 220°.

Purpose: _____

Logged by: JWM Date(s) Logged: _____

Drilling Contractor: A.D.D. Core: Size From To Collar Cased and Capped: ____

_____ _____ _____

_____ _____ _____

_____ _____ _____

Started: _____ Completed: _____

Cyprus Anvil Mining Corp.
Diamond Drill Core Log

DDH V-318
(2–8)

Code	Drillhole	Elevation	Northing	Easting	Comments
	2–8	10–16	17–24	25–32	34–48
T	V-318	1144.42	9034451.4	594920.4	FEET

Code	Drillhole	Depth	Zenith Angle	True Azimuth	Comments
	2–8	10–14	22–26	28–32	34–56
R	V-318	00	189.0	.	AT COLLAR
R	V-318	1419.0	171.5	073.0	ACID ZEN= 175° @ 163'
R	V-318	2419.0	173.0	071.0	ACID ZEN= 175° @ 235'
R	V-318	3419.0	173.0	073.0	
R	V-318	4419.0	173.0	053.0	ACID ZEN= 169° @ 417'
R		.	.	.	
R		.	.	.	
R		.	.	.	
R		.	.	.	
R		.	.	.	
R		.	.	.	
R		.	.	.	
R		.	.	.	
R		.	.	.	
R		.	.	.	

Code	Drillhole	Comments, Errant Remarks, Snivellings and/or Lewd Suggestions
	2–8	10–47

DDH V-318 (2–8)

Cyprus Anvil Mining Corp.
Lithologic Log

Logged By: JWM

Code	From	To	Unit	Code	Description
1	10–14	16–20	22 23	25–27	
L	00	213	01		overburden - triconed
L	213	360	02	4L0	possibly weathered 5B6
L	360	420	03	5D3	Z.Rk - 5C3?
L	420	460	04	4L0	as in unit 02, possibly weathered
L	460	524	05	4L0	
L	524	574	06	5D3	5C3? unusual variant of 5D3 Z.Rk.
					- wild guess - squashed pillows - ?
					sample at 54.5 + 56.5?
L	574	600	07	4L0	→ 4L3 solution channels with
					radiating feeders ~ radiating feeders at 90° to S2
					S2
L	600	668	08	4A0	locally to 5A9
L	668	690	09	5D0	Z.RK. → 5C0?
L	690	1260	10	5B6	minor variably calcareous intervals.
					locally to 4L6
L	1260	1335	11	4L6	→ 5B6 1.0' interbanded 5D (Z.Rk)
					towards EOI
L	1335	1350	12	4A0	
L	1350	1355	13	4L3	Mung.
L	1355	1378	14	4A0	as in unit 12
L	1378	1395	15	4E6	→ 4EF6
L	1395	1419	16	4C0	Brecciated sulfides within siliceous
					matrix, minor 4A0
L	1419	1750	17	4L6	→ 5B6 very locally calcareous.
					abundant chlorite locally as
					"seams" + clots semi-parallel to S2
L	1750	1784	18	5D3	Z.Rk. throughout 5C?
L	1784	1822	19	4L6	as in unit 17
L	1822	1830	20		4L gouge zone
L	1830	1854	21	4L0	→ 4L3
L	1854	2002	22	4L0	→ 4L6
L	2002	2074	23	4A0	/ 4L
L	2074	2098	24	5D0	→ ZRk 10-15% carbonates
L	2098	2152	25	4A0	/ 5D0 interbanded ≈ 0.5 - 1.0' of 5D/4A (50/50)
L	2152	2212	26	4A0	
L	2212	2243	27	4E6	→ 6E fine grained minor magnetite.

DDH V-318

Cyprus Anvil Mining Corp.

Lithologic Log

Logged By: JWM

Code	From	To	Unit	Code	Description
1	10 14	16 20	22 23	25 27	
L	12143	12172	28	4D16	4 baritic bearing 4D minor magnetite.
L	12172	12470	29	4C078	locally grades to 4E178
L	12470	12694	30	4C10	as in unit 29, locally to 4E178
					more silica over this interval.
L	12694	12750	31	5C3	As in unit 24 (Fresher appearance)
					Salt + pepper appearance - darker overall
					colour than 24
L	12750	12789	32	5D3	2 Rk - 5C3
L	12789	13012	33	4C10	Dull, bearing 4C0 minor magnetite,
					minor graphitic zone
L	13012	13208	34	4C5	Variably (locally) to 4A0 over 20% of interval
L	13208	13212	35	4C7	breccia zone of 4L + sulfide frags.
					5% po.
L	13212	13876	36	4L6	local development gamut @
					278'-282', calcited chlorite
					throughout
L	13876	13936	37	5D10	- Finely banded, minor carbonates
L	13936	14120	38	5B7	→ 5D0
L	14120	14160	39	5B6	→ locally to 4L6

DDH V-318 (2 / 8)

Cyprus Anvil Mining Corp.
Structural Log

Logged By: JWM

Code	From	To	Feature	Sym	S_1 Dip Direct.	S_2 Dip Direct.	Description
1	10 14	16 20	22 24	26	28 32	34 38	
S		215	S2			54 210	
S		360	CS2			55 210	
S		475	CS2S			63 210	S region 21.3 - 47.5
S		623	CS2M			60 210	M region 47.5 - 62.3
S		720	S2P			66 210	PS2 62.3 - 72.0
S		820	CS2S			65 210	S region 72.0 82.0
S		960	S2			80 210	
S		1120	S2P			73 210	PS2 82.112.
S		1270	CS2			70 210	
S		1370	CS2S			76 210	
S		1420	BXAR				50/50 BXA/sulfides
S		1570	CS2			75 210	
S		1720	CS2			75 210	
S		1890	CS2S			75 210	S region 142 - 189
S		2030	S2P			75 210	
S		2110	CS2Z				Z symm. 203 - 211
S		2160	CS2S			82 210	
S		2200	CS2Z			78 210	Z sym. 216.0 - 220.0
S		2370	CS2			75 210	
S		2570	S2			70 210	
S		2670	S2			72 210	
S		2870	S2			73 210	
S		3070	S2			72 210	
S		3120	S2R			63 210	4E, 4C
S		3420	PS2P			70 210	PS2 322-342
S		3570	PS2			65 210	
S		3670	CS2			60 210	
S		3780	CS2S			53 210	S region 342.0 - 378
S		3970	PS2			60 210	
S		4070	PS2			72 240	
S		4170	PS2			78 210	
S		4370	PS2			77 210	
S		4470	PS2			75 210	
S		4660	PS2P			60 210	isolated S symm observed overall. Suspect this is an S region.

2E

DDH V-318 (2–8)

Cyprus Anvil Mining Corp.
Geochemical Log (Sampler's Copy)

Logged By: JWM

Sampled By:

Code (1)	From (10–14)	To (16–20)	Sample No. (22–27)	Description: UNIT	LENGTH	REC.
P	628	668	3631	4A0	4.0	3.2
P	1335	1350	3632	4A0	1.5	1.0
P	1355	1419	3633	4AE	4.5	3.0
P	2002	2050	3634	4A0/4L	4.8	4.5
P	2050	2100	3635	4A0/5D	5.0	4.6
P	2100	2150	3636	4A0/5D0	5.0	4.8
P	2150	2190	3637	4A0	4.0	4.0
P	2190	2243	3638	4A/E6	5.3	5.3
P	2243	2272	3639	4D64	2.9	2.8
P	2272	2320	3640	4C078	4.8	4.0
P	2320	2370	3641	4C078	5.0	5.2
P	2370	2420	3642	4C078	5.0	5.0
P	2420	2470	3643	4C078	5.0	4.9
P	2470	2520	3644	4C0	5.0	5.0
P	2520	2570	3645	4C0	5.0	4.8
P	2570	2620	3646	4C0	5.0	5.0
P	2620	2694	3647	4C0	7.4	7.2
P	2789	2830	3648	4C0	4.1	4.0
P	2830	2880	3649	4C0	5.0	5.0
P	2880	2930	3650	4C0	5.0	5.0
P	2930	2980	3651	4C0	5.0	4.8
P	2980	3028	3652	4C0	4.8	4.8
P	3028	3080	3653	4C5	5.2	5.1
P	3080	3130	3654	4C5	5.0	5.0
P	3130	3208	3655	4C5	7.8	7.2
P	3208	3223	3656	4CD7	1.5	1.6

CYPRUS ANVIL MINING CORPORATION

DIAMOND DRILL CORE LOG

Hole Number: V-321

Project: VANGORDA

Location: VANGORDA PLATEAU

Claim: _____

Terr. Plane Co-ords.: _____ N

_____ E

Grid Co-ords.: _____

_____

Elevation: _____

Total Depth: 457.0

Fabric Orientation Diagram:

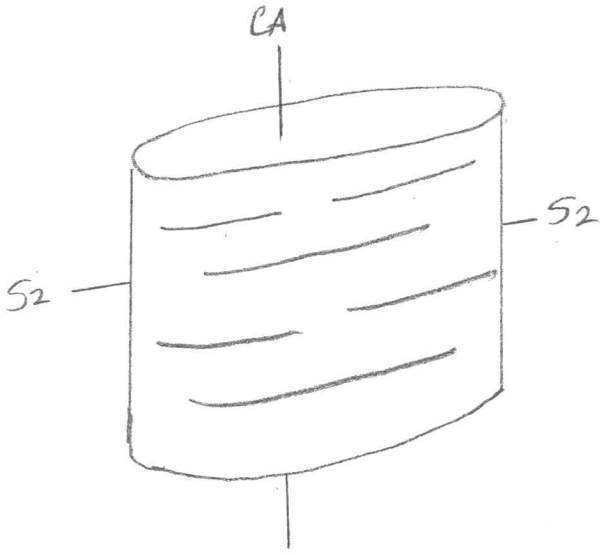

All symmetry determinations looking N.W. with S2 dipping S.W. with dip azimuth 220°.

Purpose: _____

Logged by: JWM Date(s) Logged: _____

Drilling Contractor: A.D.D. Core: Size From To Collar Cased and Capped: ____

_____ _____ _____

_____ _____ _____

_____ _____ _____

Started: _____ Completed: _____

Cyprus Anvil Mining Corp.

Diamond Drill Core Log

DDH V-321

Code	Drillhole	Elevation	Northing	Easting	Comments
T	V-321	11279.6	903359.7	593932.3	FEET

Code	Drillhole	Depth	Zenith Angle	True Azimuth	Comments
R	V-321	0	180.0		AT COLLAR
R	V-321	139.0	177.0	098.0	ACID ZEN = 179° @ 89'
R	V-321	239.0	176.0	019.0	ACID ZEN = 178° @ 327'
R	V-321	339.0	175.9	008.0	
R	V-321	439.0	176.0	115.0	ACID ZEN = 177° @ 427'

Code	Drillhole	Comments, Errant Remarks, Snivellings and/or Lewd Suggestions

DDH V-321 (2 8)

Cyprus Anvil Mining Corp.
Lithologic Log

Logged By: WM

Code	From	To	Unit	Code	Description
1	10 14	16 20	22 23	25 27	
L	1100	1663	01	#	TRICONED - NO CORE
L	1663	10175	02	4A10	Pb+Zn ± 3-5% overall
					locally zinc rich
L	10175	11160	03	4G10	Pb+Zn ± 5-8%, locally 4E6.
					very minor magnetite., overall c.g.
					locally fine - med. grained.
L	11160	12300	04	4E6	
L	12300	12700	05	4G10	As in unit 03
L	12700	14500	06	5BZ6	locally to 4L
L	14500	15006	07	4L7	carbonaceous.
L	15006	15699	08	4L3	
L	15699	16115	09	4L7	As in unit 07
L	16115	17108	10	4L37	
L	17108	17400	11	4EA	locally fine grained 4F
L	17400	17870	12	4E64	locally 4GE
L	17870	17900	13		brecciated gouge
L	17900	18955	14	4L10	
L	18955	19355	15	4L40	brecciated zone, contorted S_2
L	19355	19677	16	0D10	
L	19677	20616	17	4L46	not terribly siliceous
L	20616	20733	18	4K4	/4GK
L	20733	21700	19	4L10	py>po, py=po, py blebs (cubes) with
					po reaction rims. throughout.
L	21700	21922	20	4E1	
L	21922	22266	21	4L10	po = py
L	22266	23122	22	4L10	po>py, tuffaceous
L	23122	23833	23	4L37	tuff.
L	23833	23933	24	4GK8	
L	23933	24300	25	4L14	
L	24300	24544	26	4FG	
L	24544	24600	27	4L6	
L	24600	24850	28	4K10	≈8
L	24850	24922	29	4K0	
L	24922	25033	30	4K0	
L	25033	25100	31	4L0	
L	25100	25400	32	4G8	

DDH V-321 (2–8)

Cyprus Anvil Mining Corp.

Lithologic Log

Logged By: JWM

Code (1)	From (10–14)	To (16–20)	Unit (22–23)	Code (25–27)	Description
L	2540	2551	33	4L6	altered 5D
L	2551	2564	34	4K0	
L	2564	2593	35	4E81	locally to 4F8
L	2593	2645	36	4K0	
L	2645	2801	37	4GF8	Variably calcareous, 1-3% mgr throughout,
					more mass. 4E intervals f.g., generally
					e.g. throughout
L	2801	2854	38	4GK	
L	2854	2873	39	4G0	coarse g.
L	2873	2900	40	4E0	minor magnetite
L	2900	3010	41	4L6	carb.
L	3010	3062	42	4C7	
L	3062	3160	43	4L37	
L	3160	3200	44	5A0	
L	3200	3290	45	4A0	locally 4C
L	3290	3317	46	4C7	
L	3317	3397	47	4L73	
L	3397	3440	48	0Q0	minor 5DZR 337.7-338.0
L	3440	3470	49	4L61	
L	3470	3913	50	5B6	greyish-green, minor alteration
					facies overall
L	3913	3970	51	4L6	
L	3970	4022	52	4L5	CARB.
L	4022	4058	53		MARBLE
L	4058	4208	54	4L57	
L	4208	4310	55		SILICATED + BRECCIATED MARBLE
L	4310	4454	56	4L675	, garnetiferous
L	4450	4508	57	4L3	
L	4508	4570	58	5B6	360?
					INTERESTING HOLE

DDH V-321 (2 / 8)

Cyprus Anvil Mining Corp.
Structural Log

Logged By: JWM

Code	From	To	Feature	Sym	S_1 Dip Direct.	S_2 Dip Direct.	Description
	10 14	16 20	22 24	26	28 32	34 38	
S		1740	CS2	S		65 220	
S		1810	CS2			60 220	
S		1070	CS2	Z		70 220	
S		1270		R			sulfides
S		1380	PS2	P		55 220	
S		1410	PS2	S		68 220	
S		1590	CS2	Z		70 220	
S		1575	PS2	R			
S		1680	PS2	M		80 220	
S		1790		R			sulfides.
S		1810		R			463
S		18A0		Z		70 220	
S		1970				82 220	
S		2070				77 220	
S		2310		R		78 220	
S		2350		S		75 220	
S		2570				70 220	
S		2670				70 220	
S		2910		R		80 220	sulfides & 4L
S		2970	CS2	S		69 220	
S		3170	PS2			50 220	
S		3370	PS2			60 220	
S		3460	PSR	R		60 220	
S		3490	PS2	Z		66 220	
S		3620	PS2			70 220	
S		3750	PS2	R		70 220	375-
S		3806	PS2	E		74 220	
S		38A6	PS2	R		65 220	
S		A020	PS2	S		70 220	
S		A165	PS2	R		77 220	
S		A200	PS2	S		77 220	
S		A310		B			
S		A380	PS2	S		68 220	
S		A470	PS2			72 220	
		A570	PS2	R		61 220	52
							EOH

DDH 1-321 (2 … 8)

Cyprus Anvil Mining Corp.
Geochemical Log (Sampler's Copy)

Logged By: JWM
Sampled By:

Code	From	To	Sample No.	Description		
1	10 14	16 20	22 27	UNIT	LENGTH	REC.
P	663	730	3249	4A0	5.7	5.2
P	730	790	3250	4A0	6.0	5.0
P	790	850	3251	4A0	6.0	5.0
P	850	910	3252	4A0	6.0	6.0
P	910	970	3253	4A0	6.0	6.0
P	970	1030	3254	4A0	6.0	3.0
P	1030	1075	3255	4A0	4.5	4.0
P	1075	1125	3256	4G0	5.0	5.0
P	1125	1160	3257	4G0	3.5	3.5
P	1160	1220	3258	4E6	6.0	5.2
P	1220	1270	3259	4E6	5.0	4.7
P	1708	1787	3260	4EG	7.9	7.9
P	2061	2073	3261	4K4	1.2	1.2
P	2170	2192	3262	4E1	2.2	2.2
P	2383	2430	3263	4GL	4.7	4.7
P	2430	2480	3264	4KF	5.0	5.0
P	2480	2530	3265	4KLG	5.0	5.0
P	2530	2580	3266	4GK	5.0	5.0
P	2580	2630	3267	4K0	5.0	5.0
P	2630	2680	3268	4KG	5.0	5.0
P	2680	2730	3269	4GF	5.0	5.0
P	2730	2780	3270	4GF	5.0	5.0
P	2780	2830	3271	4GK	5.0	5.0
P	2830	2880	3272	4GK	5.0	5.0
P	2880	2900	3273	4E0	2.0	2.0
P	3010	3062	3274	4C7	5.2	5.2
P	3200	3260	3275	4C7	6.0	5.5
P	3260	3317	3276	4AC	5.7	5.0

CYPRUS ANVIL MINING CORPORATION

DIAMOND DRILL CORE LOG

Hole Number: V-15-R

Project: VANGORDA

Location: VANGORDA PLATEAU

Claim: _____

Terr. Plane Co-ords.: _____ N

_____ E

Grid Co-ords.: _____

_____

Elevation: _____

Total Depth: 4070

Fabric Orientation Diagram:

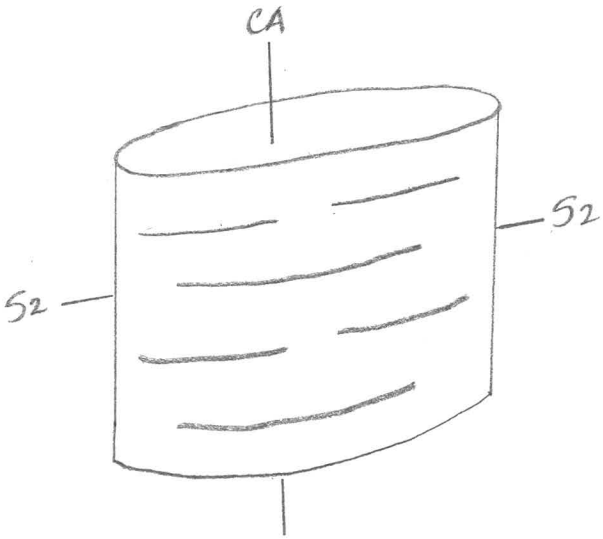

All symmetry determinations looking

N.W. with S2 dipping

S.W. with dip azimuth 220°.

Purpose: _____

Logged by: J.W.M Date(s) Logged: _____

Drilling Contractor: A.D.D.

Core: Size From To Collar Cased and Capped: ____

_____ _____ _____

_____ _____ _____

_____ _____ _____

Started: _____ Completed: _____

Cyprus Anvil Mining Corp.
Diamond Drill Core Log

DDH V-15-R (2–8)

Code	Drillhole	Elevation	Northing	Easting	Comments
	2–8	10–16	17–24	25–32	34–48
T	V-15-R	1131.23	9033971.4	5939681.5	FEET

Code	Drillhole	Depth	Zenith Angle	True Azimuth	Comments
	2–8	10–14	22–26	28–32	34–56
R	V-15-R	100	1810.0	.	ATCOLLAR
R	V-15-R	1189	1771.5	093.0	ACID ZEN = 1810° @ 93'
R	V-15-R	2189	1776.6	108.0	ACID ZEN = 1778° @ 195'
R	V-15-R	3189	1774.7	123.0	ACID ZEN = 1777° @ 287'
R			.	.	ACID ZEN = 1776° @ 380'
R			.	.	
R			.	.	
R			.	.	
R			.	.	
R			.	.	
R			.	.	
R			.	.	
R			.	.	
R			.	.	
R			.	.	
R			.	.	

Code	Drillhole	Comments, Errant Remarks, Snivellings and/or Lewd Suggestions
	2–8	10–47

DDH V-15-R (2 … 8)

Cyprus Anvil Mining Corp.
Lithologic Log

Logged By: JWM

Code	From	To	Unit	Code	Description
1	10 14	16 20	22 23	25 27	
L	0	326	01	IH	UNDERPANTS
L	326	570	02	4L4 0	? Badly weathered 5B6?, Fe staining throughout.
L	570	1150	03	4A10	Pb+Zn ≥ 4% throughout, generally quite low.
L	1150	1264	04	4A10	Pb+Zn < 1%, → 5A9
L	1264	1310	05	4D10	"cherty" appearance, Zn rich closest lith. to "cherty iron bonded Fm." in Vangorda - except for lack of Fe; 4E0 last 0.3' of int.
L	1310	1370	06	4L40	hint of 5D at EOI, 0.6' of 4A at end of interval
L	1370	1406	07	4EF8	fine grained, overall grade Pb+Zn ≈ 10%
L	1406	1470	08	4L40	3
L	1470	1477	09	5D90	
L	1477	1489	10	4E60	As in unit 07 Fineg., these sulfides represent ind. pulses?
L	1489	1620	11	4L43	minor base metal sulfides
L	1620	1628	12		brecciated gouge zone.
L	1628	1661	13	4L43	as in unit 11, hint of 5D at EOI.
L	1661	1699	14	4G68	coarse grained, locally magnetitic Prob. stained be 4G0, honey col. sphal; variably calcareous.
L	1699	1726	15	4L43	4 minor 5D bonded within 4L
L	1726	1796	16	4E68	possibly 4GE or 463 minor mag., med. gr. facies
L	1796	1846	17	4E68	as in unit 16, not 4G, locally to 4F+4J
L	1846	1857	18	4J8E	brxiated, good contacts with units 17+19
L	1857	1898	19	4G68	C-grained.
L	1898	1982	20	4E86	4E68 variably calc
L	1982	2016	21	4G68	as in unit unit 19
L	2016	2026	22	4J8	→ 4E8 variably calc.
L	2026	2055	23	4EN8	50/50 minor 5D

DDH V-15-R (2 / 8)

Cyprus Anvil Mining Corp.
Lithologic Log

Logged By: JWM

Code	From	To	Unit	Code	Description
1	10 14	16 20	22 23	25 27	
L	12105	12110 2	24	4 G8	Variably calc, c.g.
L	12110 2	12117	25	4 E8 6	Volcanic Flow rock?
L	12117	12126	26	4 LE	50/50
L	12126	12183	27	4 E8	6FL MUNG as in unit 25, Flow Features?
L	12183	12206	28	4 L4	units 26+28 - cap within 4E86 etc, Prob represents SB caught in sulfide deposition.
L	12206	12172	29	4 G8	Variably calcareous, coarse grained
L	12172	12316	30	5 G1	qtz stringers + veins, Note steep Sz relative to units 29+31
L	12316	12367	31	4 G8	Variably calcareous, coarse grained
L	12367	12430	32	4 E8 1	80-90% total sulfides
L	12430	12577	33	4 C8	60-80% " " , locally to 4E8
L	12577	12584	34	4 L1	SD? Prob. marble bond, very calc.
L	12584	12803	35	4 C8	as in unit 33
L	12803	12832	36	4 CA 8	> 4D8 , 0.2' SDO, 2.Rk. at EOI.
L	12832	12868	37	4 D8	> 4L4 Sericitic
L	12868	12883	38	4 LA	NOTE 236.3 > 283.2 highly anomalous in mag. 1-3% overall
L	12883	13030	39	4 L6	greyish-green.
L	13030	13270	40	4 L10 7	> 4L3 locally, marble bond 307-308'
L	13270	13280	41	4 A10	
L	13280	13296	42	4 L10	
L	13296	13307	43	4 A0	
L	13307	13355	44	4 L4 7	>4DL7
L	13355	13389	45	4 L7	
L	13389	13453	46	4 L4	
L	13453	13575	46	4 L0	minor SDO @ 3483
L	13575	14070	48	5 B6	greyish-(green) locally to 4L0 (minor) locally tuffaceous appearing.
		EOH			unusually high magnetite content in this hole.

DDH V-15-R (2 8)

Cyprus Anvil Mining Corp.
Structural Log

Logged By: JWM

Code	From	To	Feature	Sym	S_1 Dip Direct.	S_2 Dip Direct.	Description
	10 14	16 20	22 24	26	28 32	34 38	
S		330	CS2			70 220	
S		460	CS2			75 220	
S		570	CS2	Z		69 2210	Z symm 32.6 – 570
S		645		R			broken core?
S		690	CS2			50 2210	
S		740	CS2			23 2210	
S		800	CS2			30 2210	S symm 69-89
S		890	CS2	S		48 2210	
S		947	CS2	M		50 2210	
S		1040	CS2			70 2210	
S		1150	CS2			77 2210	
S		1255	CS2	S		75 2210	S symm 89.0 – 125.5
S		1370	S2			40 2210	
S		1570	PS2			49 2210	
S		1670	S2			65 2210	
S		1720	S2	R		60 2210	Generally PS2 (P) except in sulfides slots.
S		1870	S2			70 2210	
S		2070	S2			70 2210	
S		2270	S2			72 2210	
S		2370	S2			85 2210	
S		2570	S2			75 2210	
S		2670	S2			80 2210	
S		2890	S2	R		82 2210	Sulfides.
S		2970	S2	Z		78 2210	Z region 289 – 297
S		3040	S2			73 2210	
S		3270	S2			78 2210	S symm observed at 313'
S		3470	S2			75 2210	
S		3517	S2			75 2210	
S		3770	S2			73 2210	
S		3970	S2			74 2210	
S		4070	S2	P		75 2210	

DDH V-15-R

Cyprus Anvil Mining Corp.

Geochemical Log (Sampler's Copy)

Logged By:

Sampled By:

Code	From	To	Sample No.	Description		
1	10 14	16 20	22 27	UNIT	LENGTH	REC.
P	1570	1630	133139	4A0	6.0	5.3
P	1630	1690	133140	4A0	6.0	4.5
P	1690	1750	133141	4A0	6.0	5.3
P	1750	1810	133142	4A0	6.0	6.0
P	1810	1870	133143	4A0	6.0	6.0
P	1870	1930	133144	4A0	6.0	6.0
P	1930	1990	133145	4A0	6.0	6.0
P	1990	11950	133146	4A0	6.0	6.0
P	11050	11110	133147	4A0	6.0	6.0
P	11110	11170	133148	4A0	6.0	6.0
P	11170	12130	133149	4A0	6.0	6.0
P	12130	12164	133150	4A0	3.4	2.7
P	12164	13110	13 1511	4D0	4.6	4.5
P	13170	14006	135512	4EF8	3.6	3.6
P	14777	14889	135513	4E0	1.2	1.2
P	16161	16999	135514	4G8	3.8	3.8
P	16999	17266	135515	4L34	2.7	2.7
P	17266	17996	135516	4E68	8.0	7.4
P	17996	18466	135517	4E68	5.0	5.0
P	18466	18988	135518	4G8	5.2	5.2
P	18988	19488	135519	4E86	5.0	5.0
P	19488	19822	135160	4E86	3.4	3.4
P	19822	20113	135161	4G8	3.1	3.1
P	20113	20266	135162	4J8	1.3	1.3
P	20266	20886	135163	4E8J6	6.0	6.0
P	20886	21146	135164	4LE8	6.0	6.0
P	21146	21183	135165	4E8	3.7	3.7
P	21183	21206	135166	4L4	2.3	2.3
P	21206	21272	135167	4G8	6.6	

DDH V-15-R (2 / 8)

Cyprus Anvil Mining Corp.
Geochemical Log (Sampler's Copy)

Logged By: JWM

Sampled By:

Code	From	To	Sample No.	Description		
1	10 14	16 20	22 27	UNIT	LENGTH	REC.
P	12316	12367	135618	4G8	5.1	
P	12367	12430	135619	4E81	6.3	
P	12430	12490	135710	4C8	6.0	
P	12490	12550	135711	4C8	6.0	
P	12550	12610	135712	4C8	6.0	
P	12610	12670	135713	4C8	6.0	
P	12670	12730	135714	4C8	6.0	
P	12730	12790	135715	4C8	6.0	
P	12790	12832	135716	4C8	4.2	
P	12832	12868	135717	4D8	3.6	
P	12868	12883	135718	4L4	1.5	
P	13270	13280	135719	4A0	1.0	
P						
P	13296	13350	135810	4A/4L4	54	
P	13350	13400	135811	4L47	50	
P	13400	13453	135812	4L4	53	

CYPRUS ANVIL MINING CORPORATION

DIAMOND DRILL CORE LOG

Hole Number: V-115-R

Project: VANGORDA

Location: VANGORDA PLATEAU

Claim: _____

Terr. Plane Co-ords.: _____ N

_____ E

Grid Co-ords.: _____

_____

Elevation: _____

Total Depth: 472.0'

Fabric Orientation Diagram:

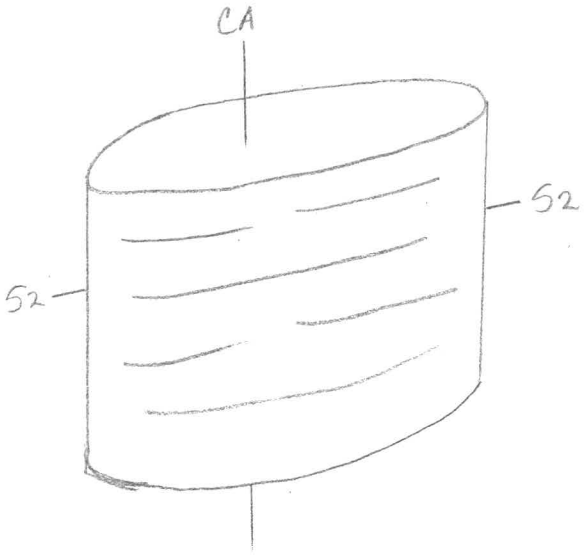

All symmetry determinations looking

NW with S2 dipping

SW with dip azimuth 220°.

Purpose: _____

Logged by: J.N.M. Date(s) Logged: _____

Drilling Contractor: A.D.D.

Core:

Size	From	To
N.Q.	12.0'	472.0'

Collar Cased and Capped: ____

Started: _____ Completed: _____

Cyprus Anvil Mining Corp.

Diamond Drill Core Log

DDH V1-1/15-R

Code	Drillhole	Elevation	Northing	Easting	Comments
1	2 8	10 16	17 24	25 32	34 48
T	V1-1/15-R	11140.163	9034271.9	593997.5	FEET

Code	Drillhole	Depth	Zenith Angle	True Azimuth	Comments
1	2 8	10 14	22 26	28 32	34 56
R	V1-1/15-R	0 0	1810.0	.	AT COLLAR
R	V1-1/15-R	1540	1716.0	1031.0	
R	V1-1/15-R	1540	1741.5	0901.0	AC/D ZEN=1171 @158'
R	V1-1/15-R	2340	1741.3	0961.0	AC/D ZEM=1176 @238'
R	V1-1/15-R	3540	1741.5	1111.0	
R	V1-1/15-R	4540	1710.0	1091.0	AC/D ZEM=1170 @472
R		.	.	.	
R		.	.	.	1510.0 - 1681.0 = 468
R		.	.	.	
R		.	.	.	
R		.	.	.	
R		.	.	.	
R		.	.	.	
R		.	.	.	
R		.	.	.	
R		.	.	.	

Code	Drillhole	Comments, Errant Remarks, Snivellings and/or Lewd Suggestions
1	2 8	10 47

DDH V-15-R (2 8)

Cyprus Anvil Mining Corp.
Lithologic Log

Logged By: JWM

Code	From	To	Unit	Code	Description
1	10 14	16 20	22 23	25 27	
L	0 0	112 0	01	#	Triconed - no core
L	112 0	170	02	4L1	3 alternating white (musc) and dark bands (SB) - note absence of sulfides, minor chlorite
L	170	245	03	5B6	
L	245	480	04	4L1	3 minor sulfides towards end of interval.
L	480	648	05	5B6	overall grey color, Fine pyrite associated with thin quartz bands musc/chlorite.
L	648	658	06	5B3	very limy
L	658	735	07	4L1	273 similar to units 2, 4
L	735	813	08	5A9	/4A poor grades not typical 4A
L	813	975	09	4A0	typical 83-88 - overall 4A4 grade ≈ 4-6%, 0.15% Cu.
L	975	1002	10	5D1	("Zebra look alike"), altered. chloritic
L	1002	1082	11	5DA	altered - 4L Look chloritic
L	1082	1155	12	4A0	Pb+Zn ≥ 1.0% Cpy ≈ 0.3%?
					Cpy as cross-cutting veinlets
L	1155	1172	13	4L3	/5D
L	1172	1194	14	4C9	Cpy ≈ 0.1%?
L	1194	1390	15	4A9	Last 2' of interval = 4C0 with bxa
L	1390	1510	16	4G7	8(8,7)
L	1510	1680	17	4G8	749 8,7,4,9 content (as well as BaSO4) quite variable throughout section. At beginning of interval 1' of highly altered 5D?
					at 154.1 - 0.2' highly altered 5D
L	1680	1780	18	4EG	84 prog 468 minor py
					0.8' 5D (Zebra) 171' - 171.8'
L	1780	1830	19	4E0	minor calcite in Cav., minor gypsum ~~anhydrite~~.
L	1830	1880	20	4G4	minor mag. minor carbonates.
L	1880	1930	21	4F6	
L	1930	2057	22	4G4	8
L	2057	2220	23	4E8	4 minor barite, minor carbonates.
L	2220	2256	24	4A7	9
L	2256	2270	25	4C0	
L	2270	2287	26	4AE	
L	2287	2397	27	4E0	

DDH V-115-R (2 8)

Cyprus Anvil Mining Corp.
Lithologic Log

Logged By: JWM

Code	From	To	Unit	Code	Description
1	10 14	16 20	22 23	25 27	
L	12397	12470	28	4F6	464?
L	12470	12590	29	4D9	8 cpy occurs as stringers along tension gashes + as blebs, minor chlorite in gashes. 1-3% magnetite, 1-2% PO
L	12590	12690	30	4CD	98 As in unit 29, less total sulfides. Pb+Zn slightly less than unit 29 greater silica.
L	12690	12710	31	5D10	("Zebro Rock") chloritic
L	12710	12870	32	4C7	D increasing PO, decreasing base metals. cpy as in in unit 29,30 appears to be "grading" into 4L
L	12870	12975	33	4L7	9 highly altered SD
L	12975	13104	34	4L7	9
L	13104	13130	35	4D9	8 As in unit 29. 0.6' SD "Zebra" as beginning of interval
L	13130	13330	36	4A0	Pb+Zn ≈ 1-4%, pyrite forms discreet horizons (massive) up to 1" thick (not typically ribbon bonded)
L	13330	13355	37	4LV	76
L	13350	13463	38	4L7	note decrease in copper grades.
L	13463	13497	39	4AD	9 not typically ribbon bonded.
L	13497	13564	40	4L7	9 cpy = 01-03%?
L	13564	13682	41	4L6	/SB minor sulfides (PO.)
L	13682	14082	42	5B6	
L	14082	14130	43	5D6	
L	14130	14720	44	5B6	minor SD bands throughout interval. Below sulfide horizon - difficult to tell whether 360 or 5B6?
		EOH			EOH

DDH V-115-R

Cyprus Anvil Mining Corp.

Structural Log

Logged By: JWM

Code	From	To	Feature	Sym	S_1 Dip	S_1 Direct.	S_2 Dip	S_2 Direct.	Description
1	10 14	16 20	22 24	26	28	32	34	38	Z region 12-18?
S		125	PS2	Z			75	220	dominant S region
S		240	PS2				68	220	18-64
S		380	PS2				60	220	M region 64-66 ?
S		480	PS2				62	220	S symm. 66-90
S		580	PS2	S			60	220	
S		680	PS2	M			60	220	
S		780	PS2				50	220	
S		870	PS2				40	220	
S		960	PS2				48	220	M region 90-98.5
S		1070	PS2	Z			55	220	Z symm 98-108
S		1250	PS2				55	220	M region (possible 3) 108-112
S		1350	CS2				25	220	S symm. 112-120
S		1550					55	220	M region 120-133
									S sym(?) 133 → ?
S		1730					58	220	banding in sulfides.
S		1930					70	220	" " "
S		2130					62	220	" " "
									possible Z region
									222-228 (in 4A)
S		2280					68	220	
S		2420					60	220	banding in sulfides.
									No meaningful structure. in 4L/4C
S		3130	CS2	Z			70	220	Z region 313-323
S		3330	CS2				75	220	M region 323
S		3480	CS2				80	220	S region 323-358?
S		3580	CS2				75	220	
S		3780	CS2				72	220	Z region 358?-387
S		3970	PS2				74	220	S region 387-403
S		4170	PS2				60	220	Z region 403-432?
S		4280	PS2				60	220	S region 432-425
S		4430	PS2	3			70	220	Z- 425-427
S		4500	PS2				50	220	S 427-441.5
S		4710	PS2				63	220	Z 441.5-443
									S 443-449
									Z 449-EOH

DDH V-115-R

Cyprus Anvil Mining Corp.

Geochemical Log (Sampler's Copy)

Logged By: IWM

Sampled By:

Code	From	To	Sample No.	Description		
1	10 14	16 20	22 27	REC	UNIT	LENGTH
P	1735	1785	4912	5.5	5A9	5.0
P	1785	1835	4913	5.2	5A/4A	5.0
P	1835	1885	4914	~~5~~ +5.5	4A0	5.0
P	1885	1935	4915	6 ft	4A0	5.0
P	1935	1975	4916	2.5	4A0	4.0
P	10822	11222	4917	4	4A0	4.0
P	11222	11555	4918	2.8	4A0	3.3
P	11555	11994	4919	4	4L/4C	3.9
P	11994	12444	5010	4.5	4A9	5.0
P	12444	12994	5511	4.3	4A9	5.0
P	12994	13444	5512	5	4A9	5.0
P	13444	13900	5513	~~4.6~~ 100%	4A9/4C0	4.6
P	13900	14400	5514	4.9 ft.	4G78	5.0
P	14400	14900	5515	~~30~~ " = 5ft	4G78	5.0
P	14900	15400	5516	5ft	4G7/4G87	5.0
P	15400	15900	5517	5ft	4G874	5.0
P	15900	16400	5518	5ft	4G874	5.0
P	16400	16800	5519	~~4~~ ft	4G874	4.0
P	16800	17300	5610	5ft.	4EG84	5.0
P	17300	17800	5611	5ft	4EG84	5.0
P	17800	18300	5612	5ft	4E0	5.0
P	18300	18800	5613	5ft	4G4	5.0
P	18800	19300	5614	5'	4F6	5.0
P	19300	19800	5615	5'	4G48	5.0
P	19800	20300	5616	5'	4G48	5.0
P	20300	20800	V 101417	5'	~~4G48/4E84~~	5.0
P	20800	21300	V 101418	5'	~~4~~E84	5.0
P	21300	21800	V 101419	5'	4E84	5.0
P	21800	22220	V 101510	5'	4E84	4.0
P	22220	22256	V 101511	3.5'	4A79	3.6
P	22256	22287	V 101512	3.1'	4C/4A	3.1
P	22287	23337	V 101513	4.6'	4E0	5.0
P	23337	23937	V 10514	4.4'	4E0	6.0

DDH V-115-B (2 / 8)

Cyprus Anvil Mining Corp.
Geochemical Log (Sampler's Copy)

Logged By: _____

Sampled By: _____

Code	From	To	Sample No.	Description		
1	10 14	16 20	22 502 * 27	REC	UNIT	LENGTH
P	12397	12437	V 105015	4'	4FG	~~5~~ 4.0
P	12437	12470	V 105016	3.25'	4FG	3.3
P	12470	12520	105017	5'	4D98	5.0
P	12520	12560	105018	4'	4D98	4.0
P	12560	12590	105019	2.2+3'	4D98	3.0
P	12590	12640	105110	5'	4CD98	5.0
P	12640	12690	105111	5'	4CD98	5.0
P	12690	12740	105112	5'	4C7/D	5.0
P	12740	12790	105113	~~3'11"~~ 4.9'	4C7/D	5.0
P	12790	12840	105114	5'	4C7/D	5.0
P	12840	12870	105115	3'	4C7/D	3.0
P	12870	12920	105116	5'	4L79	5.0
P	12920	12975	105117	~~5'4"~~ 5.4'	4L79	5.5
P	12975	13025	105118	4.6'	4L79	5.0
P	13025	13070	105119	4.5	4L79	4.5
P	13070	13104	105210	3.~~4~~	4L79	3.4
P	13104	13130	105211	2.6	4D98	2.6
P	13130	13180	105212	~~4.5+~~ 5'	4A0	5.0
P	13180	13230	105213	5'	4A0	5.0
P	13230	13280	105214	5'	4A0	5.0
P	13280	13330	105215	5'	4A0	5.0
P	13330	13380	105216	5'	4L	5.0
P	13380	13430	105217	5'	4L7	5.0
P	13430	13480	105218	5'	4L/4D	5.0
P	13480	13530	10521A	~~6'~~ 5'	4L	5.0
P	13530	13580	105310	5'	4L7	5.0
P	13580	13620	105311	5'	4L6	~~5~~ 4.0
P	13620	13680	105312	6'	4L6	~~5~~ 6.0

CYPRUS ANVIL MINING CORPORATION

DIAMOND DRILL CORE LOG

Hole Number: V-119-R

Project: VANGORDA

Location: VANGORDA PLATEAU

Claim: _____

Terr. Plane Co-ords.: _____ N

_____ E

Grid Co-ords.: _____

_____

Elevation: _____

Fabric Orientation Diagram:

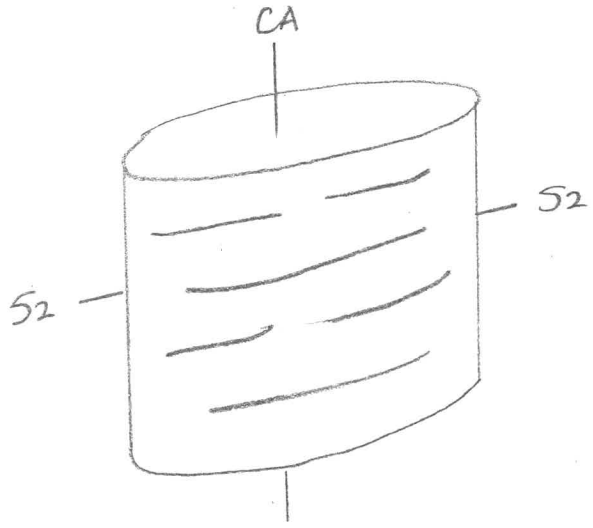

All symmetry determinations looking N.W. with S2 dipping S.W. with dip azimuth 220°.

Total Depth: 402.0'

Purpose: _____

Logged by: J.W.M. Date(s) Logged: _____

Drilling Contractor: A.D.D.

Core:

Size	From	To
N.Q.	68.0'	402.0'

Collar Cased and Capped: ____

Started: _____ Completed: _____

Cyprus Anvil Mining Corp.

Diamond Drill Core Log

DDH V-119-R

Code	Drillhole	Elevation	Northing	Easting	Comments
1	2 8	10 16	17 24	25 32	34 48
T	V-119-R	11128.94	9033766.7	5939461.9	FEET

Code	Drillhole	Depth	Zenith Angle	True Azimuth	Comments
1	2 8	10 14	22 26	28 32	34 56
R	V-119-R	0 0	180.0	.	ATCOLLAR
R	V-119-R	171.0	179.0	033.0	AC/DI ZEN=179° @138'
R	V-119-R	191.0	178.2	033.0	
R	V-119-R	291.0	176.5	061.0	AC/DI ZEN=178° @318'
R	V-119-R	391.0	177.0	058.0	AC/DI ZEN=176° @402'
R		.	.	.	
R		.	.	.	
R		.	.	.	
R		.	.	.	
R		.	.	.	
R		.	.	.	
R		.	.	.	
R		.	.	.	
R		.	.	.	
R		.	.	.	
R		.	.	.	

Code	Drillhole	Comments, Errant Remarks, Snivellings and/or Lewd Suggestions
1	2 8	10 47

DDH V-149-R (2 8)

Cyprus Anvil Mining Corp.
Lithologic Log

Logged By: JWM

Code	From	To	Unit	Code	Description
1	10 14	16 20	22 23	25 27	
L	100	1680	01	#	CASING
L	1680	1776	02	4A10	Pb+Zn ≈ 2-3%
L	1776	1890	03	4A10	Pb+Zn ≈ 3-4%, breccia fragments throughout + minor chlorite on fracture planes.
L	1890	10150	04	4A10	as in unit 3, more fragmental. unsure of footage intervals - lots of core - see structure log
L	10150	11180	05	4E3	SHOULD BE 46D - ASSAYS 7 14% Pb+Zn ← Fine grained Pb+Zn — 107'-118' 5' REC. 118-120 NO CORE REC.
L	11180	12350	06	4L3 2	only chips in this interval 118-123 5' 0.4' Rec
L	12350	12500	07	4K0	ankerite? Pb+Zn = 5-8% minor calcite 120-125' 2.6' core Rec.
L	12500	14300	08	5B16	minor po - when po% increases more bleached occurance.
L	14300	15633	09	4L67	7/SB6 towards end of interval → 4L7→4L3/ gradational change from SB6 to 4L67 (153.0-156.3 good 4L7)
L	15633	16800	10	4L671	more siliceous than unit 9 152.3-156.3 po = 5-15%
L	16800	17666	11	5D4	Specks of bright green chlorite throughout. remnants of "zebra rock towards end of interval. laminarly banded at start of interval.
L	17666	18816	12	4D10	4L + silica fragments at beginning of interval Pb+Zn ≈ 5-7%
L	18816	19626	13	4GA	Pb+Zn ≈ 10-15% $BaSO_4$ ≈ 50-60% calcareous at beginning of interval.
L	19626	20433	14	4E0	4E6, 4EK Variably calcareous, minor barite. (localized) (46 197-197.5) "massive fine grained pyrite" Pb+Zn ≈ <5%?
L	20433	20944	15	4L71	615 altered.
L	20944	21266	16	4K3	Fine g. pyrite, very calc ≈ 10-20%?
L	21266	21740	17	4E38	
L	21740	21770	18	4K3	As in unit 16

DDH V-119R (2 / 8)

Cyprus Anvil Mining Corp.
Lithologic Log

Logged By: JWM

Code	From	To	Unit	Code	Description
1	10 14	16 20	22 23	25 27	
L	21700	21320	19	4E3	minor borite, minor magnetite (localized) slightly calcareous.
L	21320	23161	20	4E83	as in unit 19, interesting structure - tectonic fractures parallel to core axis filled with dense fine grained crap which is calcareous. angular fragments of sulfides + chlorite are cemented by this crap.
L	23161	23776	21	4L7	
L	23776	23901	22	4E8	
L	23901	24066	23	4L7	
L	24066	24722	24	4K3	minor mag.
L	24722	25400	25	4E1	Pb+Zn ≈ 4-7% minor calcite (ankerite?)
L	25400	25755	26	4C10	Pb+Zn = (?) chlorite on fracture
L	25755	26657	27	4E3	increasing silica content towards end of interval.
L	26657	26661	28	4L7	
L	26661	26811	29	4C7	/4L7
L	26811	27055	30	4E1	
L	27055	27180	31	4L37	minor chlorite
L	27180	28119	32	4D109	/4L29
L	28119	28774	33	4L79	m
L	28774	31800	34	4L7	(greyish-green)
L	31800	32160	35	4L6	
L	32160	32722	36	4A1	-
L	32722	32899	37	4L76	
L	32899	33330	38	4AD	
L	33330	33700	39	4D79	/4L794
L	33700	34441	40	4L79	
L	34441	40125	41	5B6	very minor carbonates bright green chlorite associated with qtz pods. minor po throughout
		EOH			

DDH V-119R (2 8)

Cyprus Anvil Mining Corp.
Structural Log

Logged By: JWM

Code (1)	From (10–14)	To (16–20)	Feature (22–24)	Sym (26)	S_1 Dip (28–32)	S_2 Dip (34–38)	Direct.	Description
S		690	CS2	Z		75	220	Z symm 68 - 88?
S		75	CS2	Z		75	220	S sym. 88 - 128?
S		916	CS2	S		60	220	Z sym. 128 - 163
S		1250	CS2	S		78	220	E region 163-164
S		1380	CS2			64	220	
S		1460	CS2			68	220	gouge zone 147.3' - 147.4'
S		1620	PS2			70	220	
S		1760	PS2			64	220	
S		2110	S2			74	220	
S		2310	S2			70	220	No confident symmetry
S		2580	S2			71	220	determinations in sulfide
S		2790	S2			54	220	intersection.
S		2970	S2			75	220	
S		3190	S2			71	220	
S		3320	S2			73	220	
S		3500	PS2			73	220	
S		3716	PS2			68	220	S sym. 350 → EOH
S		3916	PS2			80	220	
S		4020	PS2			85	220	

EOH

Ft. Bloc	Rec
72.0-77.6	5.0
77.6-84.6	5.0
84.6-88.0	3.0
88.0-95	4.8
95.0-98.0	0.8
98.0-107.0	0.0
107.0-112.0	4.2
112.0-118.0	3.8'
118.0-120.0	0.0
120.0 125.0	2.5
125.0 128.0	3.0
128.0-134.0	5.0
134.0-138.0	4.0

DDH V-T19R (2 / 8)

Cyprus Anvil Mining Corp.

Geochemical Log (Sampler's Copy)

Logged By: _____

Sampled By: _____

Code	From	To	Sample No.	Description				
1	10 14	16 20	22 27	REC.	UNIT	LENGTH	REC%	
P	1 1 6 8 0	1 1 7 3 0	V 1 0 4 0 1	5.0	4A0	5.0'		
P	1 1 7 3 0	1 1 7 8 0	V 1 0 4 0 2	5.0	4A0	5.0'		
P	1 1 7 8 0	1 1 8 3 0	V 1 0 4 0 3	2.7	4A0	5.0'		
P	1 1 8 3 0	1 1 8 8 0	V 1 0 4 0 4	5.0	4A0	5.0'		
P	1 1 8 8 0	1 1 9 3 0	V 1 0 4 0 5	2.7	4A0	5.0'		
P	1 1 9 3 0	1 1 9 8 0	V 1 0 4 0 6	2.8	4A0	5.0'		
P	1 1 [illegible]	1 1 [illegible]		0.0	4A0	4.0'		NO CORE
P	1 1 [illegible]	1 1 [illegible]		0.0	4A0	5.0'		NO CORE
P	1 1 0 7 0	1 1 1 2 0	V 1 0 4 0 7	0.2	4E3	5.0'		POOR REC.
P	1 1 1 2 0	1 1 1 8 0	V 1 0 4 0 8	3.6	4E3	6.0		POOR REC.
P	1 1 [illegible]	1 1 [illegible]						NO CORE
P	1 1 8 0 0	1 1 2 3 5	V 1 0 4 0 9	0.6	4L32	3.5		POOR REC.
P	1 1 2 3 5	1 1 2 5 0	V 1 0 4 1 0	1.5	4K0	1.5		
P	1 1 2 5 0	1 1 3 0 0	V 1 0 4 1 1	5.0	586/4L	5.0		
P	1 1 5 3 0	1 1 5 6 3	V 1 0 4 1 2	3.3	4L7	3.3		
P	1 1 5 6 3	1 1 6 0 3	V 1 0 4 1 3	4.0	4L67	4.0		
P	1 1 6 0 3	1 1 6 4 3	V 1 0 4 1 4	4.0	4L67	4.0		
P	1 1 6 4 3	1 1 6 8 0	V 1 0 4 1 5	3.7	4L67	3.7		
P	1 1 7 6 6	1 1 8 1 6	V 1 0 4 1 6	5.0	4D0	5.0		
P	1 1 8 1 6	1 1 8 6 0	V 1 0 4 1 7	4.4	464	4.4		
P	1 1 8 6 0	1 1 9 1 0	V 1 0 4 1 8	5.0	464	5.0		
P	1 1 9 1 0	1 1 9 6 2	V 1 0 4 1 9	5.2	464	5.2		
P	1 1 9 6 2	2 1 0 0 2	V 1 0 4 2 0	4.0	4E0	4.0		
P	2 1 0 1 0 2	2 1 0 4 3	V 1 0 4 2 1	4.1	4E0	4.1		
P	2 1 0 4 3	2 1 0 9 4	V 1 0 4 2 2	5.1	4L67615	5.1		
P	2 1 0 9 4	2 1 1 2 6	V 1 0 4 2 3	3.2	4K3	3.2		
P	2 1 1 2 6	2 1 1 7 0	V 1 0 4 2 4	4.4	4E38/4K3	4.4		
P	2 1 1 7 0	2 1 2 2 0	V 1 0 4 2 5	5.0	4E3	5.0		
P	2 1 2 2 0	2 1 2 7 0	V 1 0 4 2 6	5.0	4E3	5.0		
P	2 1 2 7 0	2 1 3 2 0	V 1 0 4 2 7	5.0	4E3	5.0		
P	2 1 3 2 0	2 1 3 6 1	V 1 0 4 2 8	4.1	4E83	4.1		
P	2 1 3 6 1	2 1 3 9 1	V 1 0 4 2 9	3.0	4L7/4E8	3.0		
P	2 1 3 9 1	2 1 4 3 1	V 1 0 4 3 0	4.0	4L7/4K3	4.0		
P	2 1 4 3 1	2 1 4 7 2	V 1 0 4 3 1	4.1	4K3	4.1		

DDH V-119R (2 / 8)

Cyprus Anvil Mining Corp.
Geochemical Log (Sampler's Copy)

Logged By: _____

Sampled By: _____

Code	From	To	Sample No.	Description			
1	10 14	16 20	22 27	REC.	UNIT	LENGTH	REC%
P	12472	12510	V1 014312	3.8	4E1	3.8	
P	12510	12540	V1 014313	3.0	4E1	3.0	
P	12540	12590	V1 014314	5.0	4E3/4C0	5.0	
P	12590	12640	V1 014315	5.0	4E3	5.0	
P	12640	12661	V1 014316	2.1	4E3/4L7	2.1	
P	12661	12705	V1 014317	4.4	4L7/4E1	4.4	
P	12705	12745	V1 014318	4.0	4L37	4.0	
P	12745	12780	V1 014319	3.5	4L37	3.5	
P	12780	12819	V1 014410	3.9	4D09/4L29	3.9	
P	12819	12874	V1 014411	5.3	4L79	5.3	
P	12874	12930	V1 014412	5.6	4L7	5.6	
P	12930	12990	V1 014413	6.0	4L7	6.0	
P	12990	13050	V1 014414	6.0	4L7	6.0	
P	13050	13100	V1 014415	5.0	4L7	5.0	
P	13100	13160	V1 014416	6.0	4L7	6.0	
P	13160	13220	V1 014544	6.0	4L7	6.0	
P	13220	13272	V1 014545	5.2	4L7/4A1	5.2	
P	13272	13330	V1 014546	5.8	4L76/4A0	5.8	
P	13330	13370	V1 014547	4.0	4D79/4L79	4.0	
P	13370	13441	V1 014548	7.1	4L79	7.1	
						242.6	

CYPRUS ANVIL MINING CORPORATION

DIAMOND DRILL CORE LOG

Hole Number: V-133-R

Project: VANGORDA

Location: VANGORDA PLATEAU

Claim: _____

Terr. Plane Co-ords.: _____ N

_____ E

Grid Co-ords.: _____

_____

Elevation: 448.0'

Fabric Orientation Diagram:

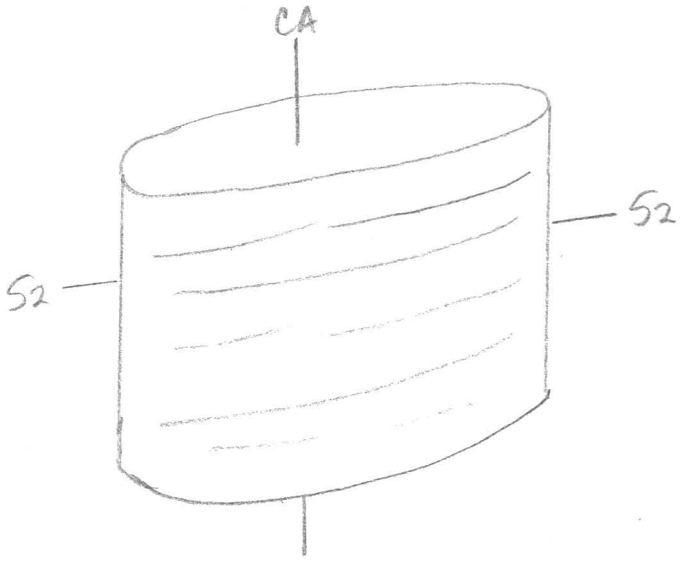

All symmetry determinations looking

N.W. with S2 dipping

S.W. with dip azimuth 220'.

Total Depth: _____

Purpose: _____

Logged by: J.W.M. Date(s) Logged: _____

Drilling Contractor: A.D.D.

Core:

Size	From	To
N.Q.	32.0'	448.0'

Collar Cased and Capped: _____

Started: _____ Completed: _____

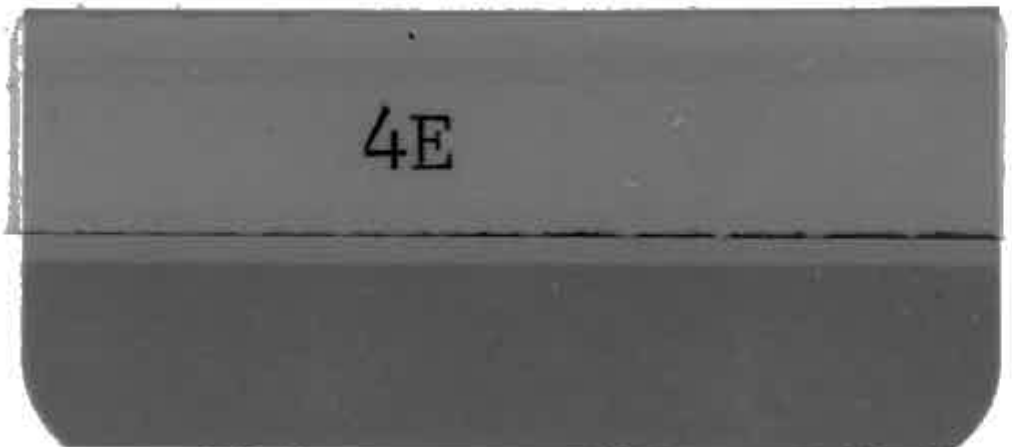
4E

CYPRUS ANVIL MINING CORPORATION

DIAMOND DRILL CORE LOG

Hole Number: V-304

Project: VANGORDA

Location: VANGORDA PLATEAU

Claim: _____

Terr. Plane Co-ords.: _____ N

_____ E

Grid Co-ords.: _____

_____

Elevation: _____

Total Depth: 527.0'

Fabric Orientation Diagram:

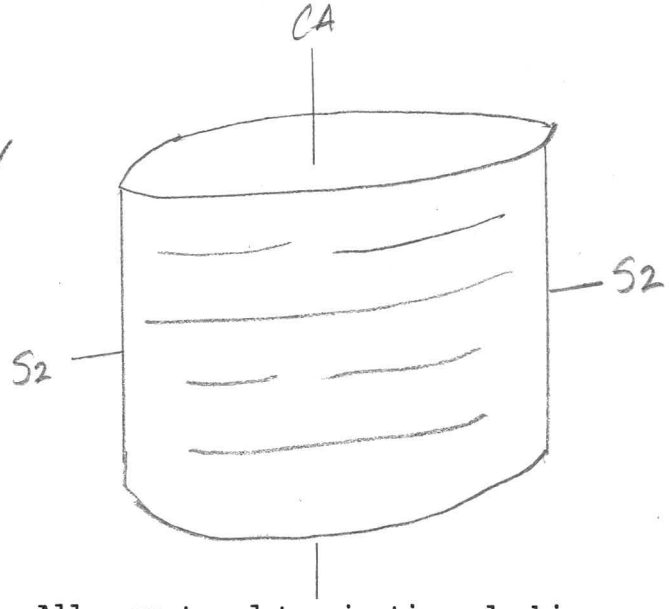

All symmetry determinations looking N.W. with S2 dipping SW with dip azimuth 221.

Purpose: _____

Logged by: D.J.H. Date(s) Logged: _____

Drilling Contractor: A.D.D.

Core: Size From To Collar Cased and Capped: ____

Size	From	To
N.Q	65.5'	527.0'

Started: _____ Completed: _____

Cyprus Anvil Mining Corp.

Diamond Drill Core Log

DDH V-304
2 8

Code	Drillhole	Elevation	Northing	Easting	Comments
1	2 8	10 16	17 24	25 32	34 48
T	V-304	1136.10	903330.1	593987.9	FEET

Code	Drillhole	Depth	Zenith Angle	True Azimuth	Comments
1	2 8	10 14	22 26	28 32	34 56
R	V-304	0 0	180.0	.	AT COLLAR
R	V-304	162 0	177.9	063.0	
R	V-304	1790	175.0	036.0	AC/DI ZEN=179° @127'
R	V-304	2790	174.8	045.0	AC/DI ZEN=177° @247'
R	V-304	3790	174.5	044.0	AC/DI ZEN=176° @377'
R	V-304	3800	174.8	050.5	GYRO SURVEY
R	V-304	5090	171.0	076.0	AC/DI ZEN=173° @527'
R		.	.	.	
R		.	.	.	
R		.	.	.	
R		.	.	.	
R		.	.	.	
R		.	.	.	
R		.	.	.	
R		.	.	.	
R		.	.	.	

Code	Drillhole	Comments, Errant Remarks, Snivellings and/or Lewd Suggestions
1	2 8	10 47

DDH V-304 (2–8)

Cyprus Anvil Mining Corp.
Lithologic Log

Logged By: DJH

Code	From	To	Unit	Code	Description
1	10–14	16–20	22 23	25–27	
L	1100	11655	11	#1	tricored - no core
L	11655	11010	12	4VA0	v. minor sdes (py)
L	11010	11260	13	4A14	5-7% Pb+Zn.
L	11260	11290	14	4E14	→ 4E46
L	11290	11366	15	4L10	- non-sde bearing; minor 4A0
L	11366	11402	16	4E10	2-3% Pb+Zn.
L	11402	11548	17	4L10	w/ minor 4E, 4C; grad. lower ct.
L	11548	11674	18	5B16	
L	11674	11738	19	5D13	
L	11738	11855	110	4G14	calc.; minor 4G48
L	11855	11870	111	4AD	
L	11870	11915	112	4L10	- no sdes
L	11915	12012 7	113	4L16	→ 4L67 (minor foliaform & patchy po)
L	12012 7	12121 9	114	4K10	calcite
L	12121 9	12121 7	115	4E18	2-4% Pb+Zn; 2-3% mag.
L	12121 7	12144 8	116	4K10	calcite
L	12144 8	12159 5	117	4G14	- w/ minor 4C8
L	12159 5	12165 7	118	4K10	calcite w/ minor 4C9
L	12165 7	12179 1	119	4JE	50:50 interbanded 4J8 : 4E0
L	12179 1	13016 6	210	4C10	25% total sdes (py)
L	13016 6	13117 0	211	4E11	10% SiO_2
L	13117 0	13213 0	212	4C10	30% tot. sdes (py)
L	13213 0	13318 2	213	5B11	→ 5B16; no sdes
L	13318 2	13510 2	214	4B14	5-7% Pb+Zn
L	13510 2	13517 6	215	4C10	~7% total sdes (py)
L	13517 6	13713 5	216	5B11	→ 5B16; no sdes; as unit 23
L	13713 5	13812 0	217	4C15	w/ minor 4D5
L	13812 0	14118 2	218	5B16	→ 5B69 (~1-2% po)
L	14118 2	14213 0	219	4A10	→ 4A9 locally
L	14213 0	14214 8	310	4C10	→ 4C97 (py > po)
L	14214 8	14216 5	311	5A10	
L	14216 5	14314 5	312	5B16	→ 5B69 (1-2% po) as unit 28
L	14314 5	14412 0	313	5A19	w/ 20% 4H1; incip. brxia. zone; 5A*?
L	14412 0	15213 0	314	5B17	→ 5B76; no sdes
L	15213 0	15217 0	315	5D16	
		EOH			

DDH V-3.04 (2 / 8)

Cyprus Anvil Mining Corp.
Structural Log

Logged By: DJH

Code	From	To	Feature	Sym	S_1 Dip Direct.	S_2 Dip Direct.	Description
1	10 14	16 20	22 24	26	28 32	34 38	
S		1716.0	CIS12			610 2121	S sym 65.5 - 89.5 ft.
S		1895	F12	E		417 2121	Z sym 89.5 - 106.0 ft.
S		10160	F12	3		515 2121	S sym 106.0 - 117.5 ft.
S		11175	F12	E		610 2121	Z sym 117.5 - 136.0 ft.
S		11360	F12	Z		717 2121	A mixed bag of R & D.D.
S		11530	F12			510 2121	136.0 - 153.0
S		11670	F12	Z		415 2121	Z sym 153.0 - 167.0 ft.
S		11868	F12	R		710 2121	R region 167.0 - 186.8
S		11940	F12	E			S sym 186.8 - 194.0
S		12015	F12	Z		710 2121	Z sym 194.0 - 201.5
S		12210	PIS12			612 2121	R region 201.5 - 323.0
S		12317.0	PIS12			612 2121	
S		12517.0	PIS12			415 2121	
S		12717.0	PIS12			718 2121	
S		12917.0	PIS12			711 2121	
S		13117.0	PIS12			710 2121	
S		13230	F12	R			Z sym 323.0 - 421.0
S		13317.0	CIS12			719 2121	
S		13517.0	CIS12			718 2121	
S		13717.0	CIS12			910 2121	
S		13917.0	CIS12			910 2121	
S		14150	CIS12			716 2121	
S		14210	F12	3			S sym 421.0 - 434.0
S		14340	F12	S		715 2121	R region 434.0 - 443.5'
S		14435	F12	R			PS2 443.5 - EOH.
S		14560	PIS12			710 2121	
S		14760	PIS12			615 2121	
S		14960	PIS12			810 2121	
S		15140	PIS12			710 2121	
		EOH					

DDH V-304 (2 8)

Cyprus Anvil Mining Corp.
Geochemical Log (Sampler's Copy)

Logged By: DTH

Sampled By:

Code	From	To	Sample No.	Description		
1	10 14	16 20	22 27	UNIT	LENGTH	REC.
P	1 1655	1 1770	V 1 01819 3	4AO	11.5	4.0
P	1 1770	1 1870	V 1 01819 4	4AO	10.0	5.0
P	1 1870	1 1960	V 1 18915	4AO	9.0	7.0
P	1 1960	1 2010	V 1 18916	4AO	5.0	4.0
P	1 2010	1 2060	V 1 18917	4A4	5.0	5.0
P	1 2060	1 2110	V 1 18918	4A4	5.0	4.8
P	1 2110	1 2160	V 1 18919	4A4	5.0	4.8
P	1 2160	1 2210	V 1 19010	4A4	5.0	4.9
P	1 2210	1 2260	V 1 19011	4A4	5.0	5.0
P	1 2260	1 2290	V 1 19012	4E4	3.0	3.0
P	1 2290	1 3166	V 1 19013	4LO	7.6	7.6
P	1 3166	1 4102	V 1 19014	4EO	3.6	3.6
P	1 4102	1 4150	V 1 19015	4LO	4.8	4.8
P	1 4150	1 5100	V 1 19016	4LO	5.0	4.8
P	1 5100	1 5488	V 1 19017	4LO	4.8	4.8
P	1 7138	1 7188	V 1 19018	4G4	5.0	5.0
P	1 7188	1 8138	V 1 19019	4G4	5.0	5.0
P	1 8138	1 8700	V 1 19110	4G/4AD	3.2	3.2
P	12027	12080	V 1 19111	4KO	5.3	5.3
P	12080	12130	V 1 19112	4KO	5.0	5.0
P	12130	12180	V 1 19113	4KO	5.0	4.9
P	12180	12219	V 1 19114	4KO	3.9	3.9
P	12219	12277	V 1 19115	4E8	5.8	5.8
P	12277	12330	V 1 19116	4KO	5.3	5.3
P	12330	12380	V 1 19117	4KO	5.0	5.0
P	12380	12488	V 1 19118	4KO	6.8	6.8
P	12488	12500	V 1 19119	4G4	5.2	5.2
P	12500	12550	V 1 19120	4G4	5.0	5.0
P	12550	12595	V 1 19121	4G4	4.5	4.3
P	12595	12657	V 1 19122	4KO	6.2	6.2
P	12657	12700	V 1 19123	4JE	4.3	4.3
P	12700	12750	V 1 19124	4JE	5.0	5.0
P	12750	12791	V 1 19125	4JE	4.1	4.1
P	12791	12850	V 1 19126	4CO	5.9	5.9

DDH V-304 (2 / 8)

Cyprus Anvil Mining Corp.
Geochemical Log (Sampler's Copy)

Logged By: DJH

Sampled By:

Code	From	To	Sample No.	Description		
1	10 14	16 20	22 27	UNIT	LENGTH	REC.
P	12185 0	12190 0	V 19217	4CO	5.0	5.0
P	12190 0	12195 0	V 19218	4CO	5.0	5.0
P	12195 0	13010 0	V 19219	4CO	5.0	5.0
P	13010 0	13016 6	V 19310	4CO	6.6	6.6
P	13016 6	13120	V 19311	4E1	5.4	5.4
P	13120	13170	V 19312	4E1	5.0	5.0
P	13170	13230	V 19313	4CO	6.0	6.0
P	13382	13440	V 19314	4B4	5.8	5.8
P	13440	13502	V 19315	4B4	6.2	6.2
P	13502	13576	V 19316	4CO	7.4	7.3
P	13713 5	13780	V 19317	4C5	4.5	4.5
P	13780	13820	V 19318	4C5	4.0	4.0
P	14182	14248	V 19319	4AC	6.6	6.5

CYPRUS ANVIL MINING CORPORATION

DIAMOND DRILL CORE LOG

Hole Number: V-305

Project: VANGORDA

Location: VANGORDA PLATEAU

Claim: _____

Terr. Plane Co-ords.: _____ N

_____ E

Grid Co-ords.: _____

_____

Elevation: _____

Fabric Orientation Diagram:

All symmetry determinations looking

NW with S_2 dipping

SW with dip azimuth 220°.

Total Depth: 408.0

Purpose: _____

Logged by: JWM Date(s) Logged: _____

Drilling Contractor: A.D.D.

Core: Size From To

Collar Cased and Capped: ____

_____ _____ _____

_____ _____ _____

_____ _____ _____

Started: _____ Completed: _____

Cyprus Anvil Mining Corp.
Diamond Drill Core Log

DDH V-305
2 8

Code	Drillhole	Elevation	Northing	Easting	Comments
1	2 8	10 16	17 24	25 32	34 48
T	V-305	1134.25	9033661.6	5940361.7	FEET

Code	Drillhole	Depth		Zenith Angle		True Azimuth	Comments
1	2 8	10	14	22	26	28 32	34 56
R	V-305	0	0	180.0		0.0	AT COLLAR
R	V-305	60	0	177.1		46.0	CLOSE TO CASING
R	V-305	210	0	178.2		21.0	
R	V-305	390	0	173.0		97.0	ACID ZERO @ 408' = 175°
R				.		.	
R				.		.	
R				.		.	
R				.		.	
R				.		.	
R				.		.	
R				.		.	
R				.		.	
R				.		.	
R				.		.	
R				.		.	
R				.		.	
R				.		.	

Code	Drillhole	Comments, Errant Remarks, Snivellings and/or Lewd Suggestions
1	2 8	10 47

DDH V-305 (2 — 8)

Cyprus Anvil Mining Corp.
Lithologic Log

Logged By: JWM

Code	From	To	Unit	Code	Description
1	10 14	16 20	22 23	25 27	
L	0	1605	01	#	CASING & TRICONED - NO CORE
L	1605	1697	02	4J K	7,8 minor cpy, minor barite, carbonate as individual "clasts" & interbanded. Pb+Zn ≥ 8%
L	1697	1753	03	4L K	? very calcareous, 10% sporadic sulfides. minor barite assc. with sulfides.
L	1753	1795	04	4J K	7,8 as in unit 02.
L	1795	1825	05	4G10	(K) calcareous Pb+Zn ≥ 6%? possibly higher sp (honey color), increasing Pb+Zn towards end of unit.
L	1825	1840	06	5D10	zebra striped -
L	1840	1900	07	4K10	87(J) Pb+Zn ≥ 10% + similar to unit 2,4 (4JEK)?
L	1900	1978	08	4G10	46K8 Pb+Zn ≥ 8% increasing towards end of interval.
L	1978	2010	09	4K10	50% 4L, 50% 090, 4L0 calcareous.
L	2010	2030	10	4J L	Similar to unit 7,4,2 - (calcareous) 20% 4L fragments.
L	2030	2045	11	0P0	
L	2045	2325	12	5BK	15A0
L	2325	2378	13	4A0	Pb+Zn ≥ 6-7%
L	2378	2417	14	4J87	Similar unit 10, non-calcareous. 15% 4L fragments.
L	2417	2437	15	4A7	
L	2437	2442	16		fault gouge - mud
L	2442	2468	17	4A7	minor 6
L	2468	2493	18	4F16	grading to 464 (honey col sphal)
L	2493	2509	19	4G10	50% 464, 50% 5D (zebra)
L	2509	2539	20	5D10	minor 46, chloritic mess - calcareous - ank, calc.
L	2539	2573	21	4G48	Low Fe ZnS
L	2573	2600	22	4JE8	
L	2600	2656	23	4G48	
L	2656	2773	24	4G8	Low Fe ZnS
L	2773	2818	25	4G48	
L	2818	2876	26	4G8K	20% Low Fe ZnS
L	2876	2083	27	4G8	increasing silica % towards end of int. Pb+Zn ≥ 10-15% with 60-70% low Fe ZnS generally magnetite bearing

DDH V-305 (2 8)

Cyprus Anvil Mining Corp.
Lithologic Log

Logged By: IWM

Code	From	To	Unit	Code	Description
1	10 14	16 20	22 23	25 27	
L	12083	12235	28	4D9	871
L	12235	12630	29	4C9	71 resembles above, less massive sulfides. Similar to 4L except for silica content.
L	12630	12808	30	4L79	as in unit 29, chloritic
L	12808	12860	31	4L9	-
L	12860	13270	32	4L6	minor po, cpy sporadic biotite zones. last 3' of interval calcareous. 304-305 biotitic
L	13270	13405	33	5D10	3 Zebra striped. calcareous.
L	13405	13440	34	5B10	?
L	13440	13490	35	3E1	? Probably 5E
L	13490	13680	36	5E10	
L	13680	14050	37	5B0	4L6? 4L6 not truly phyllitic - Variably calcareous
L	14050	14080	38	5D0	
		EOH			Distinctive holes 1 abundant calcareous units 2. 5B not distinct as you become further from sulfides in footwall. This may be a function of weak 4L development 3. Recognition of biotite - not observed in any Vangorda holes to date 4. Abundance of honey coloured ~~ZnS~~ Is this metamorphic or genetic.

DDH V-305 (2 / 8)

Cyprus Anvil Mining Corp.
Structural Log

Logged By: JWM

Code	From	To	Feature	Sym	S_1 Dip Direct.	S_2 Dip Direct.	Description
	10 14	16 20	22 24	26	28 32	34 38	
S		1700		R			Casing + mass. sulfides.
S		1750	PSR			55 220	No symm determinations.
S		1840	PSR			60 220	
S		1980		R		70 220	sulfides with interbanded
						220	4L.
S		1/0030	PSR	Z		58 220	One Symm. deter.
S		1/1700	PSR	S		75° 220	
S		1/2380	CSR	Z		70 220	
S		1/3380	PSR	S		45 220	
S		1/4500				68 220	
S		1/6700				55 220	
S		1/7380				55 220	
S		1/8800				46 220	
S		2/0800				70 220	
S		2/1800				60 220	
S		2/2300				76 220	
S		2/4800				75 220	
S		2/6050		R		70 220	massive sulfides. +4L S2 only.
S		2/6800	S2			75 220	
S		2/7800	S2			73 220	
S		2/8300	S2	Z		70 220	One S Symm observed at 2750'
S		2/9800	CS2			79 220	
S		3/0800	CS2			75 220	
S		3/1200	CS2	S		75 220	One Z observed at 3010'
S		3/2950	CS2			82 220	
S		3/3120	PS2	M		79 220	mixed region.
S		3/3400		S			
S		3/4300		Z		80 220	One determination
S		3/6100	PS2	S		74 220	
S		3/7300	PS2	R		65 220	pervasive PS2 - not truly P
S		3/8900	CS2			70 220	
S		3/9400	CS2			74 220	
S		4/0800	CS2	S		75 220	1 Z Symm observed at 3840

DDH V-305 (2 8)

Cyprus Anvil Mining Corp.
Geochemical Log (Sampler's Copy)

Logged By: WM

Sampled By:

Code	From	To	Sample No.	Description		
1	10 14	16 20	22 27	REC.	UNIT	LENGTH
P	1605	1655	V 018151	5.0	4JK8	5.0
P	1655	1697	V 018152	4.1	4JK8	4.2
P	1697	1753	V 018153	5.6	4LK	5.6
P	1753	1795	V 018154	4.2	4JK8	4.2
P	1795	1825	V 018155	3.0	4GK	3.0
P	1840	1900	V 018156	6.0	4JK8	6.0
P	1900	1940	V 018157	4.0	4GK	4.0
P	1940	1978	V 018158	3.8	4GK	3.8
P	1978	2030	V 018159	5.2	4LJ	5.2
P	1325	1378	V 018610	5.3 ✓	4AO	5.3
P	1378	1437	V 018611	5.9 ✓	4A/4J	5.9
P	1437	1468	V 018612	3.1 ✓	4A7	3.1
P	1468	1509	V 018613	3.8 ✓	4F/4G	4.1 *
P	1509	1539	V 018614	3.0 ✓	5D9	3.0
P	1539	1573	V 018615	3.4	4G4	3.4
P	1573	1610	V 018616	2.7	4JE	2.7
P	1610	1650	V 018617	5.0	4G4	5.0
P	1650	1700	V 018618	5.0	4G4	5.0
P	1700	1750	V 018619	5.0	4G4	5.0
P	1750	1800	V 018710	5.0	4G4	5.0
P	1800	1850	V 018711	5.0	4G4	5.0
P	1850	1910	V 018712	5.0	4G4	5.0
P	1910	1950	V 018713	5.0	4G4	5.0
P	1950	2010	V 018714	5.0	4G4	5.0
P	2010	2050	V 018715	5.0	4G4	5.0
P	2050	2083	V 018716	3.3	4G4	3.3
P	2083	2130	V 018717	4.6	4D9	4.7 ✓
P	2130	2180	V 018718	5.0	4D9	5.0 ✓
P	2180	2230	V 018719	5.0	4D9	5.0
P	2230	2280	V 018810	4.8	4C9	5.0
P	2280	2330	V 018811	4.9	4C9	5.0
P	2330	2380	V 018812	5.0	4C9	5.0
P	2380	2430	V 018813	5.0	4C9	5.0

DDH 1-305

Cyprus Anvil Mining Corp.

Geochemical Log (Sampler's Copy)

Logged By:

Sampled By:

Code	From	To	Sample No.	Description		
1	10 14	16 20	22 27	REC	UNIT	LENGTH
P	2430	2480	V1 1818 4	-5.0	4C9	5.0
P	2480	2530	V1 1818 6	5.0	4C9	5.0
P	2530	2580	V1 1818 6	5.0	4C9	5.0
P	2580	2630	V1 1818 7	5.0	4C9	5.0
P	2630	2680	V1 1818 8	5.0	4L7	5.0
P	2680	2730	V1 1818 9	5.0	4L7	5.0
P	2730	2780	V1 1819 0	5.0	4L7	5.0
P	2780	2830	V1 1819 1	5.0	4L7/4L9	5.0
P	2830	2860	V1 1819 2	2.5	4L9	3.0

CYPRUS ANVIL MINING CORPORATION

DIAMOND DRILL CORE LOG

Hole Number: V-306

Project: VANGORDA

Location: VANGORDA PLATEAU

Claim: _____

Terr. Plane Co-ords.: _____ N

_____ E

Grid Co-ords.: _____

_____

Elevation: _____

Fabric Orientation Diagram:

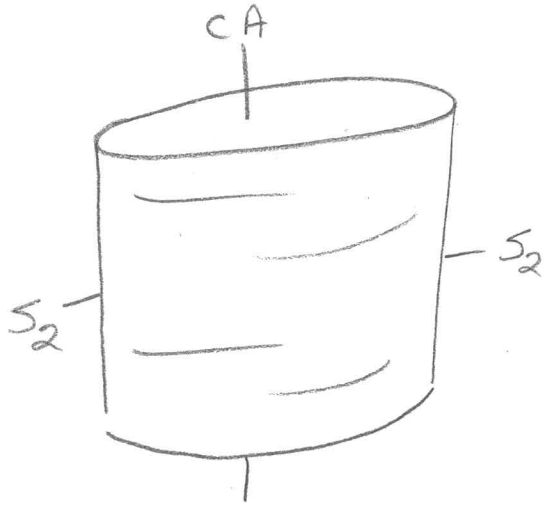

All symmetry determinations looking NW with S_2 dipping SW with dip azimuth 220°.

Total Depth: 568.0

Purpose: _____

Logged by: JWM Date(s) Logged: _____

Drilling Contractor: A.D.D. Core: Size From To Collar Cased and Capped: ____

_____ _____ _____

_____ _____ _____

_____ _____ _____

Started: _____ Completed: _____

Cyprus Anvil Mining Corp.
Diamond Drill Core Log

DDH V-3106
2 8

Code	Drillhole	Elevation	Northing	Easting	Comments
1	2 8	10 16	17 24	25 32	34 48
T	V-3106	11138.32	9033121.1	593963.0	FEET

Code	Drillhole	Depth		Zenith Angle		True Azimuth	Comments
1	2 8	10 14		22 26		28 32	34 56
R	V-3106	0	0	1810.0		.	AT COLLAR
R	V-3106	1140	0	1781.3	0481.0		ACID ZEN=179° @107'
R	V-3106	2740	0	1761.5	0481.0		
R	V-3106	4290	0	1731.0	0491.0		ACID ZEN=178° @377'
R	V-3106	5620	0	1701.0	0781.0		ACID ZEN=175° @472'
R				.		.	ACID ZEN=173° @553'
R				.		.	
R				.		.	
R				.		.	
R				.		.	
R				.		.	
R				.		.	
R				.		.	
R				.		.	
R				.		.	
R				.		.	

Code	Drillhole	Comments, Errant Remarks, Snivellings and/or Lewd Suggestions
1	2 8	10 47

DDH V-306 (2 — 8)

Cyprus Anvil Mining Corp.
Lithologic Log

Logged By: JWM

Code	From	To	Unit	Code	Description
1	10 — 14	16 — 20	22 23	25 — 27	
L	1100	1650	01	1#1	CASING . NO CORE
L	1650	1370	02	QR10	72' QQD - unusual - but true
					Virtually no sulfides, well Fractured, Fe
					staining on fracture planes.
L	1370	1520	03	4L10	14L6
L	1520	1570	04	4L3	1560-1570 abundant sulfides → 4L
L	1570	1600	05	QQP	
L	1600	1700	06	4K16	65-197 - 60' CORE RECOVERED
L	1700	1980	07	QQ10	
L	1980	2073	08	4,6,48	
L	2073	2136	09	4E6	interbanded 4F - 8%?
L	2136	2180	10	4L3	
L	2180	2270	11	5A6	1 local development calcite → 4L
L	2270	2320	12	4L10	
L	2320	2370	13	4D8	
L	2370	2420	14	4H8	closest lithology to massive po, 5% mag.
					any cpy?
L	2420	2428	15	5D10	Zebra
L	2428	2440	16	4H8	As in unit 14, clasts of 4L
L	2440	2452	17	4,6A	(8)
L	2452	2461	18	5D10	As in unit 15
L	2461	2488	19	46A	(8) As in unit 17
L	2488	2498	20	5DP	As in units 15, 18
L	2498	2520	21	4H8	clasts of 4L throughout
L	2520	2706	22	4L10	4L3
L	2706	2711	23	4A10	
L	2711	2720	24	4L10	9
L	2720	2730	25	4AP	
L	2730	2740	26	4F10	
L	2740	2753	27	4610	
L	2753	2886	28	4L10	minor development (weak) of 4A 283.5-289.0
L	2886	2913	29	4A10	
L	2913	2977	30	4L1	4L/4A
L	2977	3010	31	4A10	
L	3010	3038	32	5D10	
L	3038	3073	33	5A9	1, weakly mineralized 4A

DDH J-306 (2 / 8)

Cyprus Anvil Mining Corp.
Structural Log

Logged By: JWM

Code	From	To	Feature	Sym	S_1 Dip	S_1 Direct.	S_2 Dip	S_2 Direct.	Description
1	10 14	16 20	22 24	26	28 32		34 38		
S		1137	PSZR	R			88	220	Casing to 65'; R region to 137 (OQO)
S									
S		1512	CSZ				62	220	
S		1630	CSZ				65	220	
S		1700	CSZ	Z					
S		1820	PSZ				70	220	
S		1920	PSZ				70	220	
S		1950	PSZ	R					OQO + massive sulfides
S		2220	CSZ				60	220	
S		2250	CSZ				65	220	
S		2330	CSZ	S			65	220	
S		2443	SZ				75	220	
S		2630	SZ	R			54	220	massive sulfides
S		2700	CSZ				60	220	
S		2810	PSZ				50	220	
S		2895	CSZ	M			38	220	only four sym determinations 25, 27
S		3030	PSZ	S			65	220	
S		3110	CSZ	Z			59	220	SMALL Z region
S		3216	SZ				45	220	
S		3470	SZ				65	220	
S		3720	SZ	R			45	220	massive sulfides + 4L
S		3820	CSZ	S			69	220	
S		3920	CSZ				75	220	
S		3980	CSZ	M			80	220	dominately Z
S		4060	CSZ	S			66	220	
S		4170	PSZ				76	220	
S		4260	PSZ				57	220	
S		4335	PSZ	Z			60	220	one S observed at 4170'
S		4410	CSZ	S			80	220	
S		4520	PSZ				56	220	
S		4685	PSZ	Z			66	220	
S		4870	PSZ				70	220	
S		5050	PSZ				60	220	
S		5250	PSZ				68	220	
S		5530	PSZ				80	220	
S		5640	PSZ	P			72	220	

DDH V-306

Cyprus Anvil Mining Corp.

Geochemical Log (Sampler's Copy)

Logged By: JWM

Sampled By:

Code	From	To	Sample No.	Description		
1	10 14	16 20	22 27	UNIT	LENGTH	REC
P	1980	2030	V 09410	4G48	5.0	4.5
P	2030	2080	V 09411	4G48	5.0	5.0
P	2080	2136	V 09412	4E6	5.6	5.0
P	2320	2370	V 09413	4D8	5.0	5.0
P	2370	2420	V 09414	4H8	5.0	4.8
P	2420	2470	V 09415	5D/4G	5.0	5.0
P	2470	2520	V 09416	5D/4G/4H	5.0	5.0
P	2720	2753	V 09417	4A/4F/4G	2.3	2.3
P	3107	3170	V 09418	4L3	6.3	5.0
P	3170	3234	V 09419	4L3	6.4	6.4
P	3234	3290	V 09510	4G8	5.6	5.0
P	3290	3320	V 09511	4G8	3.0	3.0
P	3320	3370	V 09512	4G0	5.0	5.0
P	3370	3425	V 09513	4G0	5.5	5.5
P	3425	3475	V 09514	4G8	5.0	5.0
P	3475	3527	V 09515	4G8	5.2	5.2
P	3527	3580	V 09516	4E8	5.3	5.3
P	3580	3630	V 09517	4E8	5.0	5.0
P	3630	3680	V 09518	4E8	5.0	5.0
P	3680	3740	V 09519	4E8	6.0	6.0

CYPRUS ANVIL MINING CORPORATION

DIAMOND DRILL CORE LOG

Hole Number: V-307

Project: VANGORDA

Location: VANGORDA PLATEAU

Claim: _____

Terr. Plane Co-ords.: _____ N

_____ E

Grid Co-ords.: _____

_____

Elevation: _____

Fabric Orientation Diagram:

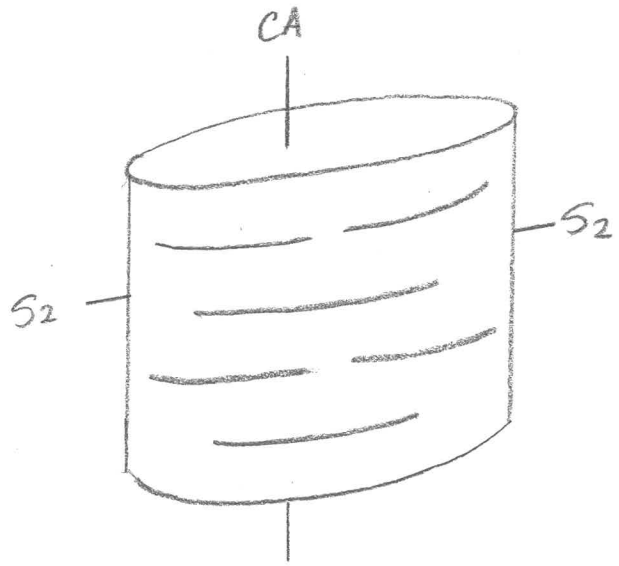

All symmetry determinations looking

N.W. with S2 dipping

S.W. with dip azimuth 220.

Total Depth: 550.0'

Purpose: _____

Logged by: J.W.M. Date(s) Logged: _____

Drilling Contractor: A.D.D.

Core:

Size	From	To
N.Q.	55.5'	550.0'

Collar Cased and Capped: ____

Started: _____ Completed: _____

Cyprus Anvil Mining Corp.
Diamond Drill Core Log

DDH V-307
2 8

Code	Drillhole	Elevation	Northing	Easting	Comments
1	2 8	10 16	17 24	25 32	34 48
T	V-307	1134.7	2903390.8	594064.9	FEET

Code	Drillhole	Depth		Zenith Angle		True Azimuth		Comments
1	2 8	10	14	22	26	28	32	34 56
R	V-307	0	0	180.0		.		ATCOLLAR
R	V-307	800	0	178.3		145.0		AC/D ZEN=179° @75'
R	V-307	1900	0	178.7		153.0		AC/D ZEN=178° @218'
R	V-307	3000	0	176.6		147.0		AC/D ZEN=172° @418'
R	V-307	4100	0	170.0		086.0		AC/D ZEN=167° @538'
R	V-307	5300	0	164.1		090.0		
R				.		.		
R				.		.		
R				.		.		
R				.		.		
R				.		.		
R				.		.		
R				.		.		
R				.		.		
R				.		.		
R				.		.		

Code	Drillhole	Comments, Errant Remarks, Snivellings and/or Lewd Suggestions
1	2 8	10 47

DDH V-307 (2 — 8)

Cyprus Anvil Mining Corp.
Lithologic Log

Logged By: JWM

Code	From	To	Unit	Code	Description
1	10 14	16 20	22 23	25 27	
L	1100	1555	01	#	CASING - NO CORE (TRICONED)
L	1555	1795	02	5B6	12 minor (weak) development of 4L
L	1795	1820	03	4L6	
L	1820	1030	04	5B6	12 As in unit 02
L	1030	1390	05	5A1	weak (30-60%) development of 4L throughout.
					weak mineralized (py-po) throughout.
					5-8% chlorite
L	1390	1399	06	4A10	
L	1399	1414	07	4L10	
L	1414	1440	08	4A10	
L	1440	1467	09	4E8	
L	1467	1478	10	4610	
L	1478	1680	11	4E8	20% 4CB, 4CE
L	1680	1880	12	4EC8	30-40% 4C8 → increasing silica
					content
L	1880	2480	13	4C8	1390 - 248 - Pb+Zn ≈ < 2%
					a few splashes of chalco
					observed, otherwise very boring.
L	2480	2710	14	4C7	/4L17?
L	2710	2722	15	4C7	/5D 50%/50%
L	2722	2795	16	4C7	/4L17? increase in chlorite (to 5%)
					From 0 in unit 14
L	2795	2822	17	4C57	→ 4A7
L	2822	2856	18	4C7	/4L17?
L	2856	2860	19		minor gouge zone -
L	2860	3274	20	4L11	/4C7 local development of chlorite.
L	3274	3334	21	4A7	
L	3334	3500	22	4L1	
L	3500	3949	23	5B6	9(qz) → 4L6 overall 5B6
L	3949	3955	24		fault gouge.
L	3955	4310	25	5B69	As in unit 23
L	4310	4336	26	5D10	Zebra contact of 5B-5D marked
L	4336	4374	27	5B6	by a breccia zone in 5B 430-4310
L	4374	4430	28	5B7	
L	4430	4480	29	5D10	
L	4480	5150	30	5B7	VERY BORING HOLE - NOT ENOUGH MINERAL TO

EOH

CAUSE CONSTIPATION!

DDH V-307 (2 / 8)

Cyprus Anvil Mining Corp.
Structural Log

Logged By: JWM

Code	From	To	Feature	Sym	S_1 Dip Direct.	S_2 Dip Direct.	Description
1	10 14	16 20	22 24	26	28 32	34 38	
S		1565	PS2R			58 220	
S		1705	PS2	M		75 220	
S		1890	PS2	M		79 220	Probable S symm - difficult
S							to determine - post D2 refolding,
							PS2
S		1923	PS2	3		80 220	
S		1050	PS2	S		73 220	
S		1180	PSR			78 220	
S		1360	PS2	P		88 220	ZONE of pervasive S2 ~~fabric~~
							near horizontal S_2 (90°) to CA.
S		1430	PS2	Z			possible Z region - only
							1 symm. determination.
S		1480	S2			60 220	
S		1605	S2			75 220	
S		1780	S2			70 220	
S		1880	S2			73 220	
S		2180	S2			68 220	
S		2290	S2			65 220	
S		2380	S2			64 220	
S		2480	S2			75 220	
S		2580	S2	P		80 220	sulfides + 4L
S		2720	CS2			75 220	
S		2880	CS2			78 220	
S		2980	CS2			75 220	
S		3230	CS2	S		77 220	dominantly S, one Z observed @ 299
S		3310	CS2	Z		70 220	
S		3450	CS2	Z		80 220	
S		3580	PS2			65 220	
S		3780	PS2			65 220	
S		3980	PS2			55 220	
S		4180	PS2			60 220	
S		4380	PS2			75 220	
S		4580	PS2			75 220	
S		4780	PS2			65 220	
S		4980	PS2			80 220	
S		5180	PS2			80 220	

DDH V-307 (2 / 8)

Cyprus Anvil Mining Corp.
Structural Log

Logged By: _____

Code	From	To	Feature	Sym	S_1 Dip Direct.	S_2 Dip Direct.	Description
1	10 14	16 20	22 24	26	28 32	34 38	
S		5380	PSZ			73 220	
S		5500	PSZR			76 220	Two S determinations observed @ 472' + 491'

DDH V-307

Cyprus Anvil Mining Corp.

Geochemical Log (Sampler's Copy)

Logged By:

Sampled By: JWM

Code	From	To	Sample No.	Description		
1	10 14	16 20	22 27	LENTH	UNIT	REC.
P	1139 0	1144 0	V1 019610	5.0	4A/4L	5.0
P	1144 0	1149 0	V1 019611	5.0	4E/4G	5.0
P	1149 0	1154 0	V1 019612	5.0	4E8	5.0
P	1154 0	1159 0	V1 019613	5.0	4E8	5.0
P	1159 0	1164 0	V1 019614	5.0	4E8	5.0
P	1164 0	1169 0	V1 019615	5.0	4E8	5.0
P	1169 0	1174 0	V1 019616	5.0	4EC8	4.9
P	1174 0	1179 0	V1 019617	5.0	4EC8	4.9
P	1179 0	1184 0	V1 019618	5.0	4EC8	4.9
P	1184 0	1189 0	V1 019619	5.0	4EC8	4.9
P	1189 0	1194 0	V1 019710	5.0	4C8	5.0
P	1194 0	1199 0	V1 019711	5.0	4C8	5.0
P	1199 0	1204 0	V1 019712	5.0	4C8	5.0
P	1204 0	1210 0	V1 019713	6.0	4C8	5.0
P	1210 0	1216 0	V1 019714	6.0	4C8	5.0
P	1216 0	1222 0	V1 019715	6.0	4C8	5.0
P	1222 0	1228 0	V1 019716	6.0	4C8	5.0
P	1228 0	1234 0	V1 019717	6.0	4C8	5.0
P	1234 0	1240 0	V1 019718	6.0	4C8	5.0
P	1246 0	1246 0	V1 019719	6.0	4C8	5.0
P	1246 0	1252 0	V1 019800	6.0	4C7	6.0
P	1252 0	1258 0	V1 019801	6.0	4C7	6.0
P	1258 0	1264 0	V1 019802	6.0	4C7	5.9
P	1264 0	1270 0	V1 019813	6.0	4C7	6.0
P	1270 0	1276 0	V1 019814	6.0	4C7	6.0
P	3274	3334	V1 019815	6.0	4A7	6.0

CYPRUS ANVIL MINING CORPORATION

DIAMOND DRILL CORE LOG

Hole Number: V-308

Project: VANGORDA

Location: VANGORDA PLATEAU

Claim: _____

Terr. Plane Co-ords.: _____ N

_____ E

Grid Co-ords.: _____

_____

Elevation: _____

Fabric Orientation Diagram:

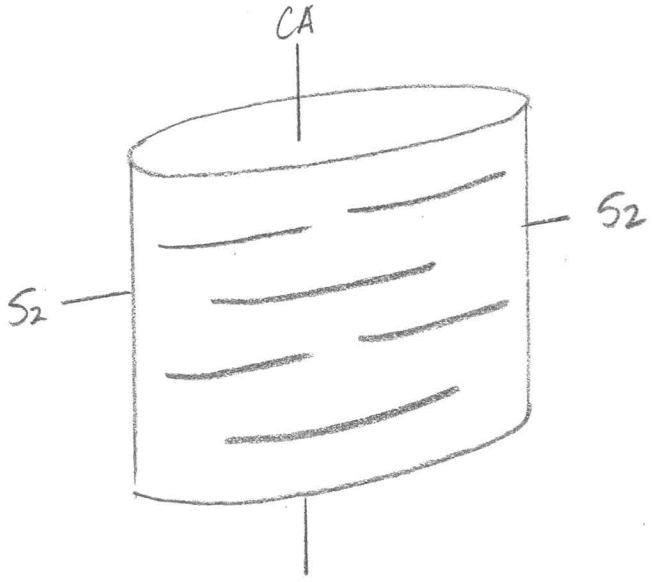

All symmetry determinations looking N.W. with S2 dipping S.W. with dip azimuth 220.

Total Depth: 455.0'

Purpose: _____

Logged by: J.W.M. Date(s) Logged: _____

Drilling Contractor: A.D.D.

Core:

Size	From	To
N.Q.	111.0	455.0

Collar Cased and Capped: _____

Started: _____ Completed: _____

Cyprus Anvil Mining Corp.
Diamond Drill Core Log

DDH V-308

Code	Drillhole	Elevation	Northing	Easting	Comments
	2 8	10 16	17 24	25 32	34 48
T	V-308	1143.62	903292.4	593939.2	FEET

Code	Drillhole	Depth	Zenith Angle	True Azimuth	Comments
	2 8	10 14	22 26	28 32	34 56
R	V-308	00	180.0	.	AT COLLAR
R	V-308	1210	178.4	213.0	AC/D ZEN=178° @237'
R	V-308	2910	178.3	198.0	AC/D ZEN=176° @387'
R	V-308	4410	179.0	063.0	AC/D ZEN=177° @455'
R		.	.	.	
R		.	.	.	
R		.	.	.	
R		.	.	.	
R		.	.	.	
R		.	.	.	
R		.	.	.	
R		.	.	.	
R		.	.	.	
R		.	.	.	
R		.	.	.	
R		.	.	.	

Code	Drillhole	Comments, Errant Remarks, Snivellings and/or Lewd Suggestions
	2 8	10 47

DDH V-308 (2 — 8)

Cyprus Anvil Mining Corp.
Lithologic Log

Logged By: IWM

Code	From	To	Unit	Code	Description
1	10 14	16 20	22 23	25 27	
L	1100	1111 0	01	#	TRICONED - NO CORE
L	1111 0	1240	02	4B10	- Last 0.7' of interval = 5D/4B
L	1240	1270	03	5A6	→ 5A1
L	1270	1282	04	4B10	As in unit 02
L	1282	1300	05	5D6	Zebra striped
L	1300	1810	06	5A6	→ 5A1 as in unit 03, local (very)
					5A9
L	1810	1932	07	4L10	altered 5A
L	1932	1970	08	5A6	As in unit 6
L	1970	2002	09	5D10	Zebra, minor inclusion of 5A6
L	2002	2059	10	4A10	Pb+Zn ≠ 2%?
L	2059	2151	11	4AL	altered 4A
L	2151	2194	12	4K13	local 5D0 towards end of interval.
L	2194	2205	13	4G4	
L	2205	2256	14	5D10	
L	2256	2270	15	5D10	Zebra ANIMULE
L	2270	2313	16	4G10	Variably calcareous, honey coloured
					ZnS, Pb+Zn ≠ 6%
L	2313	2325	17	4E10	
L	2325	2345	18	4J10	7
L	2345	2450	19	4E8	minor baitic bands.
L	2450	2463	20	4L3	
L	2463	2465	21		Fault gouge
L	2465	2521	22	4K37	As in unit 20
L	2521	2529	23	4D10	
L	2529	2558	24	4L3	As in unit 22
L	2558	2568	25	4E8	K
L	2568	2610	26	4L37	
L	2610	2624	27	4EK	
L	2624	2629	28	5D10	Zebra Animule
L	2629	2665	29	4A10	
L	2665	2775	30	4L7	
L	2775	2830	31	5D06	Zebra Animule
L	2830	3087	32	4L7	
L	3087	3105	33	4A49	
L	3105	3130	34	4H0	

DDH V-308

Cyprus Anvil Mining Corp.
Lithologic Log

Logged By: JWM

Code	From	To	Unit	Code	Description
1	10 14	16 20	22 23	25 27	
L	3130	3216 8	35	5A9	+ cpy
L	31688	32888	36	4L0	calcareous
L	32888	34500	37	4B10	→ increasing chlorite towards end of interval → 4L01
L	34500	35100	38	4L6	
L	35100	35700	39	4B0	
L	35700	36100	40	4L0	locally 5A
L	36100	36300	41	4E8	
L	36300	36774	42	5A10	
L	36774	37000	43	4D0	· minor 46
L	37000	37554	44	4L6	
L	37554	37588	45	4K0	
L	37588	38500	46	4L6	
L	38500	38555	47	4L0	calc·
L	38555	41400	48	4L6	
L	41400	43100	49	4L10	
L	43100	44300	50	5A10	
L	44300	45500	51	4L0	
					EOH

DDH V-308 (2 / 8)

Cyprus Anvil Mining Corp.
Structural Log

Logged By: JWM

Code	From	To	Feature	Sym	S_1 Dip Direct.	S_2 Dip Direct.	Description
	10 14	16 20	22 24	26	28 32	34 38	
S		1117.5	PS12			75 220	
S		1216.0	CSZ	S		75 220	
S		1480	PSZ	M		810 220	mixed S, Z - E observed but
							bracketed by Z on either side.
S		1617.0	PS2			71 220	
S		1810.0	PSZ			716 220	
S		1860	PS2	Z		618 220	
S		Z030	PS2			810 220	
S		Z120	PS2	S		812 220	
S		Z180	PS2	M		712 220	3 observed at 218.6 - but
							bracketed by S on both sides -
							taken as a M zone.
S		2370	S2			814 220	
S		2470	S2			714 220	
S		Z670	S2			713 220	
S		Z800	S2	R		712 220	Sulfides + 4L No Symm.
S		Z830		E			point observation - not to indicate
							symmetry - since non seen
S		3090	S2			69 220	on either above or below
S		3270	S2			610 220	
S		3470	S2			712 220	
S		3570	S2			612 220	
S		3740	S2			615 220	
S		3960	S2			515 220	
S		A0A0	S2			511 220	
S		A330	S2			615 220	
S		A460	S2			69 220	
S		A550	S2	R		810 220	dominantly 4L, minor 5A,
							to S symm determinations
							observed.

DDH V-308 (2 8)

Cyprus Anvil Mining Corp.

Geochemical Log (Sampler's Copy)

Logged By: JWM

Sampled By:

Code	From	To	Sample No.	Description		
1	10 14	16 20	22 27	UNIT	LENGTH	REC
F	1110	1116 0	V 109816	4BO	5.0	4.9
P	1160	1210	V 109817	4BO	5.0	2.5
P	1210	1214	V 109818	4BO	3.0	1.5
P	20102	21052	V 109819	4AO	5.0	5.0
P	21052	21102	V 109910	4AL	5.0	5.0
P	21102	21151	V 109911	(4AL)	4.9	4.8
P	21270	21320	V 109912	4GO	5.0	5.0
P	21320	21370	V 109913	4EJ	5.0	5.0
P	21370	21420	V 109914	4E8	5.0	5.0
P	21420	21450	V 109915	4E8	3.0	3.0
P	21521	21571	V 109916	4DL	5.0	4.5
P	21571	21624	V 109917	4EL	5.3	5.3
P	21629	21665	V 109918	4AO	3.6	3.3
P	31087	31130	V 109919	4AH	4.3	4.2
P	32800	33400	V 110100	4BO	5.2	5.1
P	33400	33390	V 110101	4BO	5.0	5.0
P	33390	34500	V 110102	4BO	6.0	3.5

CYPRUS ANVIL MINING CORPORATION

DIAMOND DRILL CORE LOG

Hole Number: V-310

Project: VANGORDA

Location: VANGORDA PLATEAU

Claim: _____

Terr. Plane Co-ords.: _____ N

_____ E

Grid Co-ords.: _____

_____

Elevation: _____

Total Depth: 488.0'

Fabric Orientation Diagram:

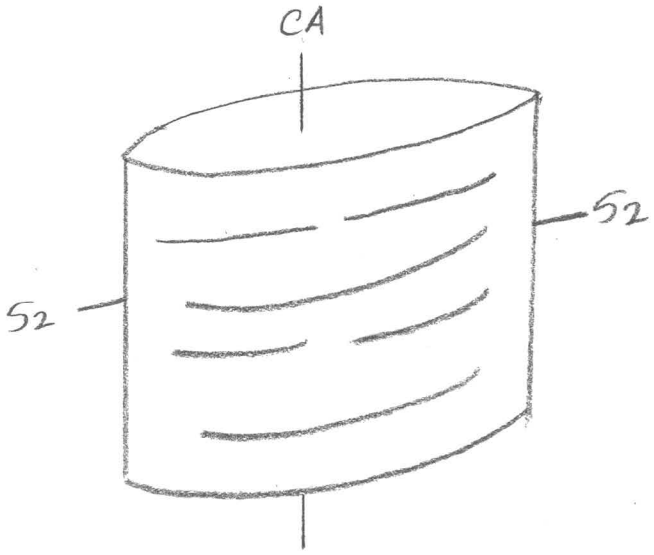

All symmetry determinations looking N.W. with S2 dipping S.W. with dip azimuth 220.

Purpose: _____

Logged by: J.W.M. Date(s) Logged: _____

Drilling Contractor: A.D.D.

Core:

Size	From	To
N.Q.	53.5'	488.0'

Collar Cased and Capped: _____

Started: _____ Completed: _____

Cyprus Anvil Mining Corp.

Diamond Drill Core Log

DDH V-310

Code	Drillhole	Elevation	Northing	Easting	Comments
	2 8	10 16	17 24	25 32	34 48
T	V-310	1137.02	9034061.7	594085.7	FEET

Code	Drillhole	Depth		Zenith Angle		True Azimuth		Comments
	2 8	10	14	22	26	28	32	34 56
R	V-310	0	0	180.0				ATCOLLAR
R	V-310	80	0	174.3		085.0		ACID ZEN=177° @87'
R	V-310	270	0	170.4		083.0		ACID ZEN=175° @407'
R	V-310	470	0	164.1		088.0		ACID ZEN=168° @478'
R								ACID ZEN=169° @494'
R								
R								
R								
R								
R								
R								
R								
R								
R								
R								
R								

Code	Drillhole	Comments, Errant Remarks, Snivellings and/or Lewd Suggestions
	2 8	10 47

DDH V-310 (2 — 8)

Cyprus Anvil Mining Corp.
Lithologic Log

Logged By: JWM

Code	From	To	Unit	Code	Description
1	10 14	16 20	22 23	25 27	
L	0000	1535	01	#1	TRICONED. NO CORE
L	1535	1690	02	5B16	Fe staining on S_2 planes near surface, locally (minor) calcareous
L	1690	1960	03	5B16	→ 5B2 locally calcareous → 5B0, minor PO
L	1960	2065	04	5B16	→ 4L → 5B0 Variably calcareous minor sulfides (po, cpy)
L	2065	2135	05	4L16	
L	2135	2145	06		gouge 4L6 Fault zone?
L	2145	2208	07	4L17	
L	2208	2290	08	4A10	red sphal, minor pyrite, Pb+Zn ≈ 6%
L	2290	2380	09	4A10	Pb+Zn ≈ 4% 0.5% po, trace magnetite.
L	2380	2480	10	4C10	trace PO, cpy, Pb+Zn ≈ 4%
					Very skunky, variably carbonaceous
L	2480	2496	11	4C17	as in unit 10 7% PO
L	2496	2555	12	4C10	as in unit 10
L	2555	2567	13	5D10	Zebra striped.
L	2567	2623	14	4C10	As in unit 12, 20% 4E1
L	2623	2644	15	5D16	? unusual variety of 5D - sample for thin section
L	2644	2814	16	4C17	? As in unit 14 - increasing base metals, increasing cpy+PO, minor magnetite.
L	2814	3016	17	4A10	First 8' - best grade ≈ 45%
					locally PO-rich, locally 4A9
L	3016	3033	18	4L17	
L	3033	3046	19	4A10	
L	3046	3064	20	4L17	
L	3064	3162	21	4A10	
L	3162	3200	22	5A11	locally → 5A9 → 4A0
L	3200	3221	23		Fault gouge + ripped core. Fault plane at a high angle to S_2
L	3221	3287	24	5A11	as in unit 23
L	3287	3300	25	4L17	?
L	3300	3384	26	4A10	Pb+Zn ≈ 1.0%, minor cpy.
L	3384	3430	27	5A11	as in units 22, 25
L	3430	3460	28	4L16	
L	3460	3597	29	4A10	minor Pb+Zn, calcareous mud-seam at 3580 1" thick, minor PO last 15'

DDH V-310

Cyprus Anvil Mining Corp.
Lithologic Log

Logged By: JWM

Code	From	To	Unit	Code	Description
1	10 14	16 20	22 23	25 27	
L	12597	12730	30	4L37	- chloritic seams // to S_2 (or S_2) foliation.
L	12730	13098	31	4L73	last 10' of interval 4L appears
					to be biotitic, greyish-green chlorite
					seams // S_2
L	13098	13130	32	4L0	/5A9 "carbonaceous 4L"
L	13130	13414	33	4L73	
L	13414	13500	34	4L37	
L	13500	13975	35	4L6	first 20' - 70% 4L6, 370 - 375
					50/50 4L6/5B6
L	13975	14230	36	5B6	
L	14230	14290	37	5D16	
L	14290	14320	38	5B6	
L	14320	14480	39	5B16	/4L6 - 432-448 4L6/5B6
L	14480	14810	40	5B16	7
L	14810	14810	41	5B0	(calcareous)
L	14810	14880	42	5B176	
		EOH			

DDH V-310 (2 8)

Cyprus Anvil Mining Corp.
Structural Log

Logged By: JWM

Code	From	To	Feature	Sym	S_1 Dip Direct.	S_2 Dip Direct.	Description
1	10 14	16 20	22 24	26	28 32	34 38	
S		513 0	PS12			47 2210	
S		690	PS12			45 220	
S		818 0	PS12			65 220	F4 fold at 92 A.P: 32° to C.A.
							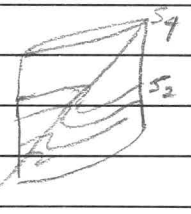
S		917 0	PS12	R		52 2210	prevasive S_2
S		1080	PS2			62 220	
S		1140	PS12	S		48 220	
S		1220	PS2	R			No symm observed 114-122
S		1310 0	CS12	Z		62 2210	
S		1480	S2			83 220	
S		1580	S2			80 220	
S		1780	S2			80 220	
S		1840	S2	R		80 220	4A + sulfides.
S		1818 0	PS2	S		80 220	
S		1980	PS2			80 220	
S		2150	PS2	Z		85 220	
S		2210	PS12	R			4A + 5A - No symmetry.
S		2245	PS2	S		85 2210	
S		2420	PS2	R		79 220	4A + 5A · no sym. observed.
S		2480	PS2			80 220	
S		2611 0	PS12	S		73 220	
S		2780	PS2			82 220	
S		2880	PS2			75 220	
S		3030	PS12	R		80 220	garbage zone, horizontal, indeterminant, two S's + two Z's observed 283 + 275 S+Z both at each point.
S		3110	PS2	S		79 2210	
S		3210 0	PS12	Z		70 220	inflection zones not observed in core.
S		3240	PS2	R		80 220	
S		3280	PS2	S		80 220	
S		3345	PS2	R		75 220	

DDH V-310

Cyprus Anvil Mining Corp.
Structural Log

Logged By: JWM

Code	From	To	Feature	Sym	S_1 Dip	S_1 Direct.	S_2 Dip	S_2 Direct.	Description
	10 14	16 20	22 24	26	28 32		34 38		
P		3480	PSZ	Z			78	210	
P		3660	PSZ				90	220	
P		3760	PSZ				75	220	
P		4080	PSZ				55	220	
P		4280	PSZ				67	220	
P		4480	PSZ				70	220	
P		4680	PSZ				70	220	
P		4880	PSZR				75	220	Two S determinations @ 403' & 446'

DDH V-310 (2 / 8)

Cyprus Anvil Mining Corp.
Geochemical Log (Sampler's Copy)

Logged By: JWM

Sampled By:

Code	From	To	Sample No.	Description		
1	10 14	16 20	22 27	UNIT	LENGTH	REC.
P	1208	1250	V1 10153	4A0	4.2	4.1
P	1250	1300	V1 10154	4A0	5.0	5.0
P	1300	1350	V1 10155	4A0	50	5.0
P	1350	1400	V1 10156	4A0	50	4.4
P	1400	1450	V1 10157	4C0	50	4.4
P	1450	1500	V1 10158	4C7	50	4.2
P	1500	1550	V1 10159	4C0	50	5.0
P	1550	1623	V1 10160	4C0	7.3	7.1
P	1644	1690	V1 10161	4C7	4.6	4.2
P	1690	1740	V1 10162	4C7	50	4.3
P	1740	1790	V1 10163	4C7	50	4.4
P	1790	1840	V1 10164	4A0	50	4.2
P	1840	1890	V1 10165	4A0	50	4.4
P	1890	1940	V1 10166	4A0	50	4.3
P	1940	1990	V1 10167	4A0	50	4.2
P	1990	2040	V1 10168	4A/4L	50	4.1
P	2040	2090	V1 10169	4A/4L	50	4.2
P	2090	2140	V1 10170	4A0	50	4.4
P	2140	2162	V1 10171	4A0	2.2	2.0

CYPRUS ANVIL MINING CORPORATION

DIAMOND DRILL CORE LOG

Hole Number: V-33-R

Project: VANGORDA

Location: VANGORDA PLATEAU

Claim: _____

Terr. Plane Co-ords.: _____ N

_____ E

Grid Co-ords.: _____

_____

Elevation: _____

Total Depth: 509.0'

Fabric Orientation Diagram:

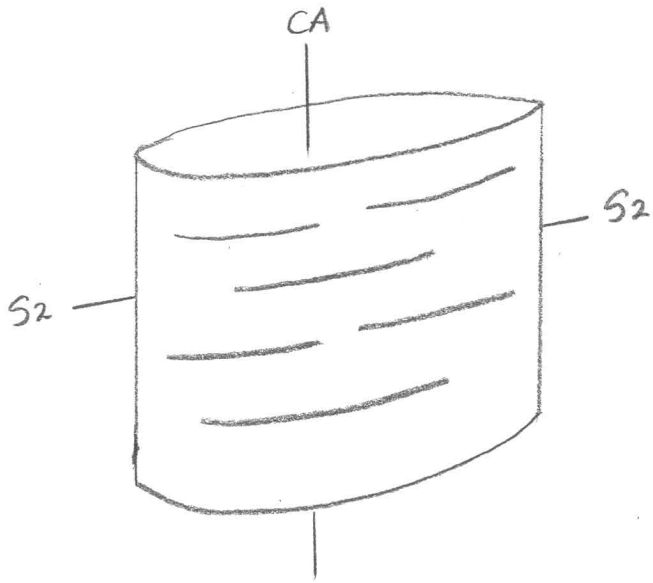

All symmetry determinations looking

N.W. with S2 dipping

S.W. with dip azimuth 220.

Purpose: _____

Logged by: J.W.M. Date(s) Logged: _____

Drilling Contractor: A.D.D.

Core:

Size	From	To
N.Q.	73.0'	509.0'

Collar Cased and Capped: _____

Started: _____ Completed: _____

Cyprus Anvil Mining Corp.
Diamond Drill Core Log

DDH V-33-R
2 4E 8

Code	Drillhole	Elevation	Northing	Easting	Comments
1	2 8	10 16	17 24	25 32	34 48
T	V-33-R	1134.56	9033491.0	594007.6	FEET

Code	Drillhole	Depth	Zenith Angle	True Azimuth	Comments
1	2 8	10 14	22 26	28 32	34 56
R	V-33-R	0 0	180.0	.	AT COLLAR
R	V-33-R	820	178.3	263.0	ACID ZEN=179° @168'
R	V-33-R	1020	178.1	258.0	ACID ZEN=179° @318'
R	V-33-R	1120	177.2	080.0	ACID ZEN=178° @468'
R	V-33-R	1420	177.5	188.0	
R		.	.	.	
R		.	.	.	
R		.	.	.	
R		.	.	.	
R		.	.	.	
R		.	.	.	
R		.	.	.	
R		.	.	.	
R		.	.	.	
R		.	.	.	
R		.	.	.	

Code	Drillhole	Comments, Errant Remarks, Snivellings and/or Lewd Suggestions
1	2 8	10 47

DDH V-33-R (2 / 8)

Cyprus Anvil Mining Corp.
Lithologic Log

Logged By: JWM

Code	From	To	Unit	Code	Description
1	10 14	16 20	22 23	25 27	
L	1100	1730	01	#1	TRICONED - NO CORE
L	1730	1935	02	4A10	→ 4A4
L	1935	1953	03	4E10	"Sandy pyrite"
L	1953	1986	04	4G4	
L	1986	1101	05	4E6	50% sandy pyrite, 50% 4G
L	1101	1109	06	4E16	→ 4E0 as in unit 03
L	1109	1110	07	4G10	minor honey coloured sphalerite.
L	1110	1136	08	5D11	Zebra Striped
L	1136	1165	09	4E1	Vuggy, Sandy pyrite.
L	1165	1210	10	4EF	badly ripped core, Pb+Zn ≈ 10%
					∞ should be 4F0?
L	1216	1233	11	4E8	
L	1233	1263	12	4G4K8	50/50 4G/4K minor magnetite
					in 4G
L	1263	1387	13	4E8	1-2% magnetite as blebs & massive
					seams
L	1387	1465	1A	4G4	locally magnetitic, first two
					feet calcareous,
L	1465	1475	15	4G10	/5D 40% 4G/60% 5D
L	1475	1558	16	4G10	4? honey coloured ZnS
L	1558	1565	17	4J8	
L	1565	1576	18	5D10	Zebra striped critter.
L	1576	1630	19	4G8	>4K8 20% 4K, numerous 4G, clasts &
					carbonate "bundles"
L	1630	1706	20	4KJ8	abundant 20% Fragments 4G?
					(possibly Limestone remnants) - increasing
					towards end of interval - tectonic
					a slump Feature - probably slump
					feature.
L	1706	1763	21	4G0	4E6?
L	1763	1789	22	5D1	- minor 4G foliaform bands.
L	1789	1873	23	4G8	Variably calcareous
L	1873	1908	24	4E8	Variably calcareous
L	1908	1970	25	4G8	
L	1970	1984	26	4K10	10% interbanded 4G8
L	1984	2010	27	4G8	As in unit 25

DDH V-33-R (2 8)

Cyprus Anvil Mining Corp.
Lithologic Log

Logged By: JWM

Code	From	To	Unit	Code	Description
1	10 14	16 20	22 23	25 27	
L	12010	12038	28	4GL	40% 4L as lenses fragments (4L3) variably calcareous with minor 4K
L	12038	12073	29	4G8	increasing in magnetite grain size over previous 468 sections contact between 468 + 4E very sharp + bounded by dolomitic fragments & increased magnetite both in 4E+4G
					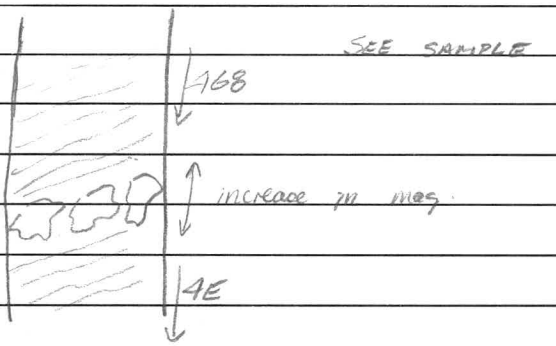
L	12073	12080	3D	4EK	
L	12080	12082	31	5D3	Zebra critter
L	12082	12151	32	4E1	minor magnetite
L	12151	12196	33	4C10	→4E1
L	12196	12244	34	4C7	
L	12244	12470	35	4C8	magnetite as diss + isolated blebs, minor po throughout (1%) cpy variable - overall quite low increasing chlorite towards end of interval.
L	12470	12530	36	4C7	As in unit 34
L	12530	12645	37	4C8	As in unit 35
L	12645	12845	38	4C8	increased magnetite as interbands. increasing chlorite. minor cpy.
L	12845	12900	39	4L34	
L	12900	12940	40	4L64	chlor = musc
L	12940	13090	41	4LC4	50% 4L/50% 4C increasing cpy. chloritic
L	13090	13151	42	4KP	
L	13151	13380	43	4C10	minor magnetite, minor chalcopyrite + chlorite approaching 4G6 but not quite, variably calcareous.
L	13380	13442	44	4LC	74
L	13442	13630	45	4L6	7

DDH V-33-R (2 ... 8)

Cyprus Anvil Mining Corp.
Lithologic Log

Logged By: JWM

Code	From	To	Unit	Code	Description
1	10 14	16 20	22 23	25 27	
L	3630	4095	46	4L6	chlorite ≫ musc. but 4L6 not 5B6
L	4095	4280	47	4L65	
L	4280	4450	48	5B6	sporadic development of 4L
L	4450	5090	49	5B7	weakly calcareous, very minor development of 4L at beginning of interval
		EOH			
					UNIT 46 - some minor 4A + 4L trying to make it to 4A but not quite - might this represent the lower Luzon

DDH V-33-R (2 / 8)

Cyprus Anvil Mining Corp.
Structural Log

Logged By: JWM

Code	From	To	Feature	Sym	S1 Dip Direct.	S2 Dip Direct.	Description
	10 14	16 20	22 24	26	28 32	34 38	
S		1780	PS2			70 210	
S		1940	PS2	Z		71 220	
S		11060	S2			71 220	
S		11150	S2			25 220	
S		11230	S2			73 220	
S		11330	S2			60 220	
S		11430	S2			62 220	
S		11580	S2			65 220	
S		11680	S2			62 220	
S		11780	S2			63 220	
S		11980	S2			75 220	
S		12080	S2			74 220	
S		12280	S2			76 220	
S		12380	S2			80 220	
S		12820	S2			66 220	
S		12980	S2			65 220	
S		13080	S2			80 220	
S		13180	S2			74 220	
S		13280	S2			60 220	
S		13420	S2	R		77 220	one S at 303'
							massive sulfides, quartzites
							+ 4L
S		13550	PS2	M		80 210	mixed zone Z+S
S		13730	PS2	R		80 210	PS2
S		13880	PS2	S		64 220	
S		14080	PS2			57 220	
S		14280	PS2			72 220	
S		14480	PS2			77 220	
S		14680	PS2			70 220	
S		14880	PS2			70 220	
S		15090	PS2	R		70 220	one S at 413'

DDH V-33-R (2 of 8)

Cyprus Anvil Mining Corp.

Geochemical Log (Sampler's Copy)

Page 7 of 8

Logged By: JWM

Sampled By:

Code	From	To	Sample No.	Description		
1	10 14	16 20	22 27	UNIT	LENGTH	REC
P	1730	1780	V1 110103	4AO	50	4.9
P	1780	1830	V1 110104	4AO	50	4.8
P	1830	1880	V1 110105	4AO	50	2.5
P	1880	1935	V1 110106	4AO	55	3.0
P	1935	1953	V1 110107	4EO	1.8	1.8
P	1953	1986	V1 110108	4G4	3.3	1.3
P	1986	2040	V1 110109	4EG	54	4.9
P	2040	2090	V1 110110	4E6	50	4.8
P	2090	2130	V1 110111	4G/5D	40	4.0
P	2130	2165	V1 110112	4 E1	3.5	3.4
P	2165	2216	V1 110113	4EF	5.1	3.5
P	2216	2263	V1 110114	4EG	4.7	4.7
P	2263	2320	V1 110115	4E8	57	5.7
P	2320	2387	V1 110116	4E8	67	6.7
P	2387	2427	V1 110117	4G4	40	4.0
P	2427	2477	V1 110118	4G/5D	50	5.0
P	2477	2530	V1 110119	4G0	53	5.3
P	2530	2580	V1 110120	4J/5D	5.0	5.0
P	2580	2630	V1 110121	4G8/K	50	5.0
P	2630	2680	V1 110122	4KJ	50	5.0
P	2680	2730	V1 110123	4KG	50	5.0
P	2730	2780	V1 110124	4GK/5D	50	5.0
P	2780	2830	V1 110125	4G8	50	5.0
P	2830	2880	V1 110126	4G8	50	5.0
P	2880	2930	V1 110127	4EG	50	5.0
P	2930	2970	V1 110128	4G8	40	4.0
P	2970	3010	V1 110129	4KG	40	4.0
P	3010	3073	V1 110130	4G8/L	63	6.3
P	3073	3130	V1 110131	4E1/K	47	4.7
P	3130	3196	V1 110132	4C0	6.6	6.6
P	3196	3244	V1 110133	4C7	4.8	4.8
P	3244	3300	V1 110134	4C8	5.6	5.6
P	3300	3350	V1 110135	4C8	5.0	5.0
P	3350	3410	V1 110136	4C8	6.0	6.0
P	3410	3470	V1 110137	4C8	6.0	6.0

DDH 1 33-R

Cyprus Anvil Mining Corp.
Geochemical Log (Sampler's Copy)

Logged By: JWM

Sampled By:

Code	From	To	Sample No.	Description		
1	10 14	16 20	22 27	UNIT	LENGTH	REC
P	2470	2530	V 1038	4C7	6.0	6.0
P	2530	2590	1039	4C8	6.0	6.0
P	2590	2640	1040	4C8	5.0	5.0
P	2640	2700	V 1041	4C8	6.0	6.0
P	2700	2760	1042	4C8	6.0	6.0
P	2760	2820	1043	4C8	6.0	6.0
P	2820	2870	V 1044	4C8/4L	6.0	6.0
P	2870	2900	V 1045	4L3	3.0	3.0
P	2940	3000	V 1046	4LC/4	6.0	6.0
P	3000	3060	1047	4LC/4	6.0	6.0
P	3060	3120	V 1048	4L/4K	6.0	6.0
P	3120	3180	1049	4K/4C	6.0	6.0
P	3180	3240	V 1050	4C0	6.0	6.0
P	3240	3300	V 1051	4C0	6.0	6.0
P	3300	3380	1052	4C0	8.0	8.0

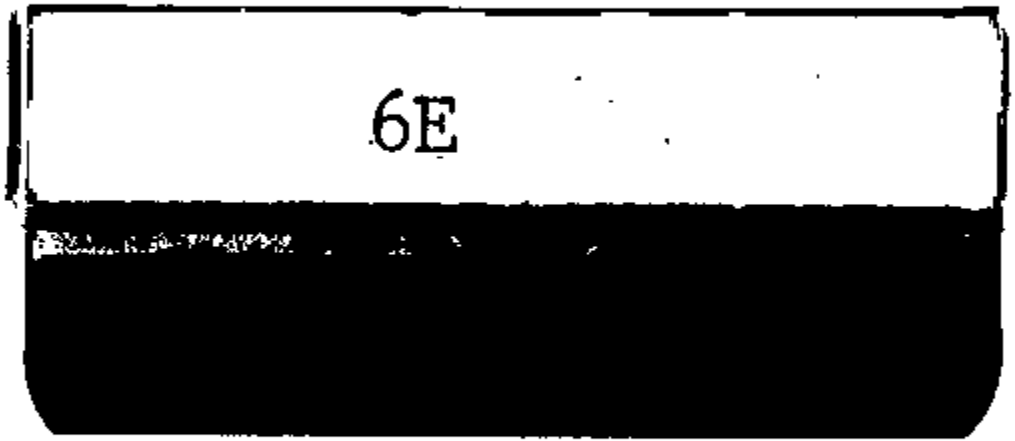
6E

DDH V-L26-R (2 / 8)

Cyprus Anvil Mining Corp.

Lithologic Log

Logged By: DJH.

Code	From	To ft.	Unit	Code	Description
1	10 14	16 20	22 23	25 27	
L	10 0	1517 5	11	#	O/B
L	1517 5	1815 0	12	5B16	weakly altered? or surface weathering effects; minor py/po
L	1815 0	1918 0	13	4A10	w/ minor 5D3 & 5A0 interbanded; becoming more pyritic towards end of int.
L	1918 0	10150	14	4E1	minor 4A frags & 4C interbands
L	10150	16167	15	4A10	4F4 interbands to 3" thick; two small 5D6 bands.
L	16167	17150	16	5B16	→ 5B62 @ end of int.
L	17150	18189	17	5A1	→ 5A0 locally.
L	18189	21070	18	4A10	→ 4AE; 30% 4E interbanded
L	21070	21142	19	5A10	1 ft. gouge & breccia @ upper ct.
L	21142	21240	110	4L13	white mica alt.; minor 5A interbanded
L	21240	21320	111	4A10	→ 4C0 @ end of int.
L	21320	31180	112	4L13	white mica alt.; → 4L79 locally.; split for Cu; chpy seems to be decreasing along int.; → 4L37
L	31180	51010 0	113	4L10	→ 4L07 ; weak white mica & chl.? alt.; minor patchy & S2 foliaform po throughout; 4L7 (495-496); a few massive po bands toward end of int.;
L	51010 0	51011 5	114	5D13	40% $CO_3^=$
L	51011 5	51416 0	115	5B16	minor 4L7 @ start of int; 2' QQO 504-506; gouge & breccia zone 518.5-539; 4L7 (501.5-503.0)
		EOH			
					NOTE: 4L0 = mod. altered {5B, 5D, 5F}
					4L6 = weakly altered {5B, 5D, 5F}
					4L3 = WME (= strongly altered)
					altered = sericite and/or silica usually accompanied w/ sdes.

DDH V-12.6-R (2 / 8)

Cyprus Anvil Mining Corp.
Structural Log

Logged By: DJH.

Code	From	To ft	Feature	Sym	S_1 Dip Direct.	S_2 Dip Direct.	Description
1	10 14	16 20	22 24	26	28 32	34 38	
S		165	CS2			67 220	Z sym 57.5 - 140
S		1815	CS2			75 220	PS2 from 98-105 (in sdes)
S		1015	CS2			64 220	
S		1215	CS2			68 220	
S		1410	F2	Z			Ind. sym. 140 - 149
S		1415	CS2			57 220	
S		1419	F2	Z			Z sym 149 - 187
S		1613	CS2			76 220	
S		1815	CS2			70 220	
S		1817	PS2				PS2 187 - 202
S		1918	PS2			70 220	
S		2102	F2	Z			Z sym 202 - 240.5
S		2120	CS2			68 220	
S		24105	F2	S		72 220	S sym 240.5 - 263
S		2518	CS2			46 220	
S		2613	F2	Z			Z sym 263 - 280
S		2718	CS2			67 220	
S		2810	F2	Z			Ind. sym 290 - 290
S		2910	F2	S			S sym 290 - 396
S		2918	CS2			72 220	
S		3118	CS2			73 220	
S		3318	CS2			58 220	
S		3518	CS2			77 220	
S		3718	CS2			70 220	
S		3916	F2	Z			Z sym 396 - 425
S		3918	CS2			75 220	
S		4118	CS2			77 220	
S		4215	F2	S			S sym 425 - EOH
S		4318	CS2			64 220	
S		4518	CS2			76 220	
S		4718	CS2			75 220	
S		4918	CS2			78 220	
S		5118	CS2			81 220	
S		5414	CS2			75 220	

DDH V-126-R (2 / 8)

Cyprus Anvil Mining Corp.
Geochemical Log (Sampler's Copy)

Logged By: DJH
Sampled By: AL

Code	From	To	Sample No.	Description		
				UNIT	LENGTH	REC.
1	10 14	16 20	22 27			
P	1 1850	1 1900	1V1012019	4AO	5.0	5.0
P	1 1900	1 1950	1V1012110	4AO	5.0	5.0
P	1 1950	1 1980	1V1012111	4AO	3.0	3.0
P	1 1980	1 2015	1V1012112	4E1	3.5	3.5
P	1 2015	1 2050	1V1012113	4E1	3.5	3.5
P	1 2050	1 2100	1V1012114	4AO	5.0	5.0
P	1 2100	1 2150	1V1012115	4AO	5.0	4.1
P	1 2150	1 2200	1V1012116	4AO	5.0	5.0
P	1 2200	1 2250	1V1012117	4AO	5.0	5.0
P	1 2250	1 2300	1V1012118	4AO	5.0	5.0
P	1 2300	1 2350	1V1012119	4AO	5.0	5.0
P	1 2350	1 2400	1V1012120	4AO	5.0	5.0
P	1 2400	1 2450	1V1012121	4AO	5.0	5.0
P	1 2450	1 2500	1V1012212	4AO	5.0	5.0
P	1 2500	1 2550	1V1012213	4AO	5.0	5.0
P	1 2550	1 2600	1V1012214	4AO	5.0	5.0
P	1 2600	1 2667	1V1012215	4AO	6.7	6.7
					81.7	
P	1 1889	1 1940	1V1012126	4AO	5.1	4.9
P	1 1940	1 1990	1V1012127	4AO	5.0	5.0
P	1 1990	2 0030	1V1012128	4AO	4.0	4.0
P	2 0030	2 0070	1V1012129	4AO	4.0	4.0
					18.1	
P	2 2140	2 2190	1V1012130	4AO	5.0	5.0
P	2 2190	2 3120	1V1012131	4AO/4CO	3.0	3.0
P	2 3120	2 3170	1V1012132	4L7	5.0	5.0
P	2 3170	2 4220	1V1012133	4L7	5.0	5.0
P	2 4220	2 4670	1V1012134	4L7	5.0	5.0
P	2 4670	2 5220	1V1012135	4L7	5.0	5.0
P	2 5220	2 5570	1V1012136	4L7	5.0	5.0
P	2 5570	2 6220	1V1012137	4L7	5.0	5.0
P	2 6220	2 6670	1V1012138	4L7	5.0	5.0
P	2 6670	2 7220	1V1012139	4L7	5.0	5.0
P	2 7220	2 7670	1V1012140	4L7	5.0	5.0
P	2 7670	2 8220	1V1012141	4L7	5.0	5.0
P	2 8220	2 8670	1V1012142	4L7	5.0	5.0

DDH V-12.6-R (2 / 8)

Cyprus Anvil Mining Corp.
Geochemical Log (Sampler's Copy)

Logged By: DJH.

Sampled By:

Code	From	To	Sample No.	UNIT	LENGTH	REC.
1	10 14	16 20	22 27			Description
P	12817 0	12920	V012413	4L7	5.0	5.0
P	12920	12970	V012414	4L7	5.0	5.0
P	12970	13020	V012415	4L7	5.0	5.0
P	13020	13070	V012416	4L7	5.0	5.0
P	13070	13120	V012417	4L7	5.0	5.0
					88.0	
				tot.=	187.8	186.7 = 99%

CYPRUS ANVIL MINING CORPORATION

DIAMOND DRILL CORE LOG

Hole Number: V-20-R

Project: VANGORDA

Location: VANGORDA PLATEAU

Claim: _____

Terr. Plane Co-ords.: _____ N

_____ E

Grid Co-ords.: _____

_____

Elevation: _____

Total Depth: 4730

Fabric Orientation Diagram:

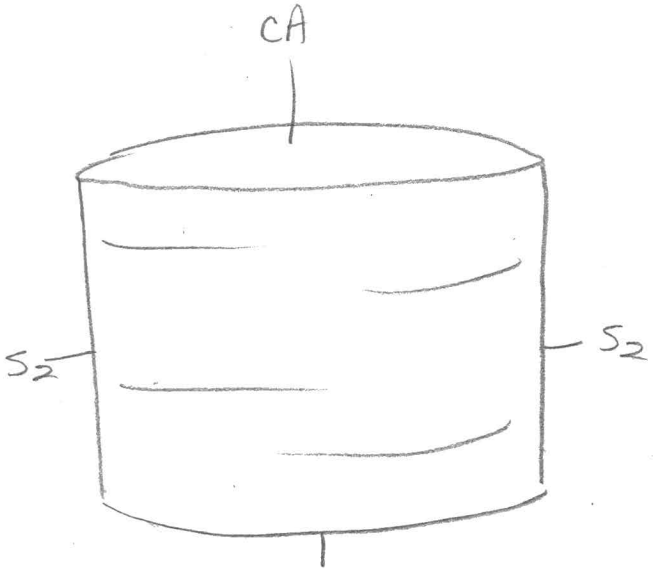

All symmetry determinations looking

NW with S2 dipping

SW with dip azimuth 220.

Purpose: _____

Logged by: JWM Date(s) Logged: _____

Drilling Contractor: A.D.D. Core: Size From To Collar Cased and Capped: ____

_____ _____ _____

_____ _____ _____

_____ _____ _____

Started: _____ Completed: _____

Cyprus Anvil Mining Corp.
Diamond Drill Core Log

DDH V1-20-R
2 8

Code	Drillhole	Elevation	Northing	Easting	Comments
1	2 8	10 16	17 24	25 32	34 48
T	V1-20-R	1148.31	9032611.2	5941003.0	FEET

Code	Drillhole	Depth	Zenith Angle	True Azimuth	Comments
1	2 8	10 14	22 26	28 32	34 56
R	V1-20-R	0 0	180.0	.	AT COLLAR
R	V1-20-R	1320	179.0	153.0	ACID GEN = 179° @ 1571'
R	V1-20-R	2320	177.5	223.0	ACID GEN = 179° @ 2801'
R	V1-20-R	3320	176.2	068.0	ACID GEN = 179° @ 3251'
R		.	.	.	ACID GEN = 175° @ 4701'
R		.	.	.	
R		.	.	.	
R		.	.	.	
R		.	.	.	
R		.	.	.	
R		.	.	.	
R		.	.	.	
R		.	.	.	
R		.	.	.	
R		.	.	.	
R		.	.	.	

Code	Drillhole	Comments, Errant Remarks, Snivellings and/or Lewd Suggestions
1	2 8	10 47

DDH V-20-R (2 8)

Cyprus Anvil Mining Corp.

Lithologic Log

Logged By: WM

Code	From	To	Unit	Code	Description
1	10 14	16 20	22 23	25 27	
L	1100	1250	01	#	TRICONED - NO CORE
L	1250	1365	02	4L37	
L	1365	1428	03	5D10	fizzes in 10% HCl when scratched. Z Rk.
L	1428	1478	04	5B62	locally to 4LO
L	1478	1570	05	4LO	locally to 5B62, carbonaceous
L	1570	1698	06	5B62	as in unit 4
L	1698	1704	07	5D10	Z.Rk.
L	1704	1712	08	5B62	
L	1712	1726	09	5D10	Z.Rk.
L	1726	1800	10	4L47	locally contains manganese.
L	1800	1870	11	4L37	" " "
L	1870	1890	12	4F46	464?
L	1890	1964	13	4LO	marble / 4L 50/50. Reaction with 10% when powdered.
L	1964	1977	14	4L43	
L	1977	2013	15	5BR	Variably calc.
L	2013	2028	16	4F46	
L	2028	2042	17	4L43	
L	2042	2058	18	4GA	
L	2058	2175	19	4L43	
L	2175	2210	20	4GA	K calcareous
L	2210	2252	21	4L43	
L	2252	2271	22	4F46	
L	2271	2403	23	4L43	
L	2403	2455	24	5B62	
L	2455	2560	25	4L43	carbonaceous at beginning of interval.
L	2560	2620	26	4GO	
L	2620	2705	27	5B62	locally 4L
L	2705	2750	28	4LO	
L	2750	2886	29	5BR	Variably calc.
L	2886	3018	30	5D10	Calcareous throughout, Z.RK.
L	3018	3220	31	5BR	Variably calc., po
L	3220	3270	32	4LO	
L	3270	3354	33	4L4	
L	3354	3433	34	4L43	
L	3433	3451	35	4KO	

DDH V-20-R (2 8)

Cyprus Anvil Mining Corp.
Lithologic Log

Logged By: _____

Code	From	To	Unit	Code	Description
1	10 14	16 20	22 23	25 27	
L	13415	13700	316	4L10	locally regions of carbonaceous 4LO, variably calcareous throughout.
L	13700	13965	317	4L16	
L	13965	13979	318	4H0	
L	13979	14009	319	4L9	
L	14009	42100	410	4L16	→ 4LO, minor variably calc. intervals.
L	42100	42180	411	5B16	→ 4L6
L	42180	43002	412	0Q0	
L	43100	44800	413	4L10	17
L	44800	45377	414	5B6	→ 4L6
L	45377	45160	415	5B16	Breccia + Gouge zone.
L	45160	47300	416	5B16	→ locally to 4L6.

DDH V-20-R (2 8)

Cyprus Anvil Mining Corp.
Structural Log

Logged By: JWM

Code	From	To	Feature	Sym	S_1 Dip Direct.	S_2 Dip Direct.	Description
1	10 14	16 20	22 24	26	28 32	34 38	
S		1260	CSR			78 220	
S		1370	CSR			75 220	
S		1490	CS2	S		78 220	
S		1575	CS2	Z		80 220	
S		1670	CSR	M		55 210	
S		1770	CSR			80 220	one Z observation at 172'
S		1840	CS2	S		75 220	
S		12010	PSR	Z		78 220	
S		2170	SR			67 220	
S		2270	SR			70 220	
S		2370	SR			70 220	
S		2420	SR	R		65 220	
S		2510	SR	Z		65 220	
S		2670	SR			70 220	
S		2770	SR			66 220	S observed 302'
S		2870	SR			65 220	Z observed @ 2895'
S		2970	SR			73 220	Z " " 307'
S		3160	SR	R		70 220	4L + sulfides
S		3270	CS2			52 220	
S		3330	CS2	S		80 220	
S		3470	SR			62 220	
S		3810	SR			80 220	
S		4000	SR			78 220	
S		4170	SR			60 220	
S		4550	SR			65 220	
S		4630	SR			50 220	
S		4730	SR	R		45 220	4L + sulfides.

DDH 1-20-R (2 / 8)

Cyprus Anvil Mining Corp.
Geochemical Log (Sampler's Copy)

Logged By: JWM

Sampled By:

Code	From	To	Sample No.	Description		
1	10 14	16 20	22 27	UNIT	LENGTH	REC
P	18700	18900	312011	4F6	2.0	
P	20130	20328	312012	4F6	1.5	
P	20328	20542	312013	4L3	1.4	Cu. Au. only.
P	20542	20758	312014	4G4	1.6	
P	21750	22000	312015	4G4K	2.5	
P	22000	22252	312016	4L3	5.2	Cu, Au only
P	22252	22471	312017	4F6	1.9	
P	25600	26200	312018	4G0	6.0	
P	32700	33000	312019	4L4	3.0	
P	33000	33354	312110	4L4	5.4	
P	34333	34511	312111	4K0	1.8	
P	39665	39779	312112	4H4	1.4	
P	39779	41003	312113	4L9	3.0	Cu, Au only

CYPRUS ANVIL MINING CORPORATION

DIAMOND DRILL CORE LOG

Hole Number: V-35-R

Project: VANGORDA

Location: VANGORDA PLATEAU

Claim: _____

Terr. Plane Co-ords.: _____ N

_____ E

Grid Co-ords.: _____

_____

Elevation: _____

Total Depth: 567.0

Fabric Orientation Diagram:

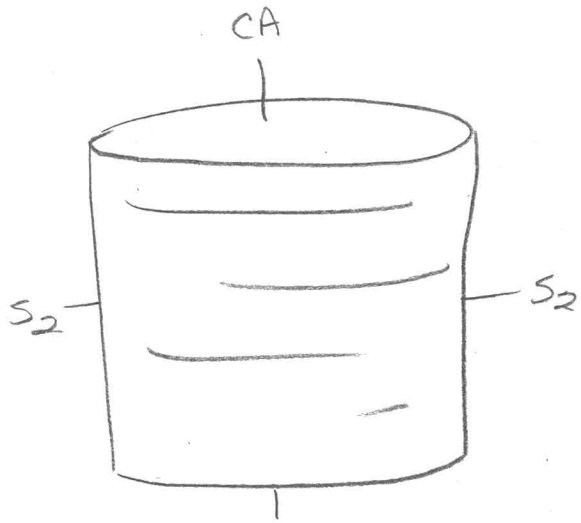

All symmetry determinations looking

NW with S_2 dipping

SW with dip azimuth 220°.

Purpose: _____

Logged by: JWM Date(s) Logged: _____

Drilling Contractor: A.D.D.

Core: Size From To Collar Cased and Capped: ____

_____ _____ _____

_____ _____ _____

_____ _____ _____

Started: _____ Completed: _____

Cyprus Anvil Mining Corp.
Diamond Drill Core Log

DDH V1-35-R1

Code	Drillhole	Elevation	Northing	Easting	Comments
1	2 8	10 16	17 24	25 32	34 48
T	V1-35-R1	1,147.33	9,033,43.6	594,097.5	FEET

Code	Drillhole	Depth	Zenith Angle	True Azimuth	Comments
1	2 8	10 14	22 26	28 32	34 56
R	V1-35-R1	0 0	180.0	.	ATCOLLAR
R	V1-35-R1	149 0	175.0	181.0	ACID ZEN = 177° @ 137'
R	V1-35-R1	249 0	175.7	033.0	ACID ZEN = 178° @ 207'
R	V1-35-R1	349 0	174.8	043.0	ACID ZEN = 177° @ 367'
R	V1-35-R1	449 0	172.0	071.0	
R	V1-35-R1	549 0	170.0	081.0	ACID ZEN = 172° @ 567°
R		.	.	.	
R		.	.	.	
R		.	.	.	
R		.	.	.	
R		.	.	.	
R		.	.	.	
R		.	.	.	
R		.	.	.	
R		.	.	.	
R		.	.	.	

Code	Drillhole	Comments, Errant Remarks, Snivellings and/or Lewd Suggestions
1	2 8	10 47

DDH V-35-R (2 8)

Cyprus Anvil Mining Corp.

Lithologic Log

Logged By: IWM

Code	From	To	Unit	Code	Description
1	10 14	16 20	22 23	25 27	
L	1100	15160	01		TRICONED
L	15160	16660	02	5B162	→ 4L6 badly broken + weathered.
L	16660	16760	03	4L13	punky
L	16760	17430	04	4A10	Pb+Zn ≥ 2%
L	17430	18440	05	5B16	trace graphite, minor 4L6
L	18440	10170	06	4L16	variably altered 5B6
					similar to unit 5, greater po,
					greater amount & alteration, variably
					carbonaceous + calcareous
L	10170	11100	07	4L13	
L	11100	11770	08	4L16	as in unit 06
L	11770	11800	09		gouge.
L	11800	13200	10	4L16	as in unit 08, 06, towards
					end of interval → 4L37
L	13200	13370	11	4A10	→ 4A4
L	13370	13420	12	5D10	calcareous
L	13420	13740	13	4A10	
L	13740	13800	14	4G10	coarse grained
L	13800	14280	15	4A10	
L	14280	15190	16	4E86	→ 4F86 minor calcareous intervals
L	15190	18150	17	4C18	60-80% sulfides - py, mil cpy
L	18150	25200	18	4C18	60% total sulfides, localized
					cpy to 0.15%?, very low overall
					division between 17+18 is very
					arbitrary.
L	25200	25700	19	4C10	40% FeS, → 4L67 increasing cpy?
L	25700	26150	20	4A10	
L	26500	26600	21	5B10	4A without the graphite.
L	26160	27200	22	4A10	as in unit 20
L	27200	28270	23	4L17	locally to 0.15% cpy Variably calc.
L	28270	29100	24	4L107	Variably calcareous
L	29100	29460	25	4L10/5D	50/50 calcareous.
L	29460	30380	26	4L07	→ 4L37 variably calcareous.
L	30380	31200	27	5D10	→ 2Rk.
L	31200	31400	28	4L0	calc.
L	31400	32270	29	5D10	as in unit 28 27

DDH V-35-R (2 8)

Cyprus Anvil Mining Corp.
Lithologic Log

Logged By: IWM

Code	From	To	Unit	Code	Description
1	10 14	16 20	22 23	25 27	
L	13227	13243	30	4L10	
L	13243	13270	31	5D10	As in unit 27, 29
L	13270	13650	32	4L17	locally to 4L37, minor carbonates locally, -split for Au, Cu.
L	13650	13670	33	4L10	Calcareous
L	13670	13834	34	5B10	locally to 4L6
L	13834	13842	35		Fault gouge
L	13842	13970	36	5B13	similar to unit 34
L	13970	14140	37	4L167	tuffaceous throughout
L	14140	14580	38	4L167	"normal" 4L6 - 1 a 2 intervals for Au, Cu.?
L	14580	14593	39	4L16	Variably calcareous
L	14593	14733	40	4L167	as in unit 38, biotitic
L	14733	14764	41	5D10	→ 4L/5D altered 5D/
L	14764	15120	42	5B16	14 → locally to 4L6 overall greenish colour.
L	15120	15164	43	5D16	Z.RK, talcose.
L	15164	15297	44	5B17	→ 5D6
L	15297	15305	45	5D16	as in unit 43
L	15305	15492	46	4L467	
L	15492	15535	47	4L43	
L	15535	15607	48	5B16	→5B7
L	15607	15627	47		Fault gouge.
L	15627	15660	48	5B17	= as in unit 48
L	15660	15670			Fault gouge.
		EOH			

DDH V-35-R (2 / 8)

Cyprus Anvil Mining Corp.
Structural Log

Logged By: LWM

Code	From	To	Feature	Sym	S_1 Dip Direct.	S_2 Dip Direct.	Description
1	10 14	16 20	22 24	26	28 32	34 38	
S		1630	CIS2	Z		63 2210	
S		1770	PS2			70 2210	
S		9100	PS2	R		810 2210	PS2 in 4L+5B
S		11018.0	PS2	M		83 2210	Flip+Flog region.
S		11170	CIS2			710 2210	
S		12170	CIS2	Z		715 2210	Z region 108-127
S		13100	PS2	H			H region 127-130
S		13880	CIS2	Z		80 2210	Z region 130-1388.0
S		15170	IS2			710 2210	
S		17110	IS2			715 2210	
S		19180	IS2			610 2210	
S		22170	IS2			815 2210	
S		24160	IS2			810 2210	
S		26154	IS2	R		718 2210	one Z symm. @ 260', sulfide
S		26190	PIS2	D		810 2210	
S		27220	PIS2	S		83 2210	S region 269-272
S		28830	PS2	Z		715 2210	Z region 272-283
S		29197	PS2	R		815 2210	
S		30330	PIS2	H		810 2210	H 291.7-303
S		31770	PS2			85 2210	
S		32188	PIS2	R		710 2210	R region 317-328.8
S		34170	PS2			710 2210	
S		36170	CIS2	S		710 2210	S region 328.8-367.0
S		38170	PS2			615 2210	
S		39160	PS2			615 2210	
S		41170	PS2			710 2210	
S		42170	PS2			712 2210	
S		45140	PS2			710 2210	S symm @ 455'
S		47170	PS2			82 2210	
S		48170	PS2			84 2210	
S		49170	PS2			815 2210	S symm @ 502'
S		52170	PS2			80 2210	
S		54770	PS2			75 2210	
S		56240	PS2	P		710 2210	

DDH V-35-R (2 8)

Cyprus Anvil Mining Corp.

Geochemical Log (Sampler's Copy)

Logged By: _____

Sampled By: _____

Code	From	To	Sample No.	Description			
1	10 14	16 20	22 27	UNIT	LENGTH	REC.	
P	1 1676	1 1743	V 13425	4AO	6·7	6·4	
P	1 1720	1 1320	1 34216	4L3	5·0	5·0	
P	1 1320	1 1342	1 34217	4A/5D	2·2	2·2	
P	1 1342	1 1380	1 34218	4A/4G	3·8	3·8	
P	1 1380	1 1428	1 34219	4AO	4·8	4·8	
P	1 1428	1 1480	1 34230	4E8	5·2	5·2	
P	1 1480	1 1540	1 34231	4EC8	6·0	6·0	
P	1 1540	1 1600	1 34232	4C8	6·0	6·0	
P	1 1600	1 1680	1 34233	4C8	8·0	6·0	
P	1 1680	1 1740	1 34234	4C8	6·0	6·0	
P	1 1740	1 1810	1 34235	4C8	6·0	6·0	
P	1 1810	1 1860	1 34236	4C8	6·0	6·0	
P	1 1860	1 1920	1 34237	4C8	6·0	6·0	
P	1 1920	1 1980	1 34238	4C8	6·0	6·0	
P	1 1980	2 0400	1 34239	4C8	6·0	6·0	
P	2 0940	2 1100	1 34240	4C8	6·0	6·0	
P	2 1100	2 1160	1 34241	4C8	6·0	6·0	
P	2 1160	2 2220	1 34242	4C8	6·0	6·0	
P	2 2220	2 2280	1 34243	4C8	6·0	6·0	
P	2 2280	2 3400	1 34244	4C8	6·0	6·0	
P	2 3400	2 4000	1 34245	4C8	6·0	6·0	
P	2 4000	2 4600	1 34246	4C8	6·0	6·0	
P	2 4600	2 5120	1 34247	4C8	6·0	6·0	
P	2 5120	2 5760	1 34248	4CO	5·0	5·0	
P	2 5760	2 6300	1 34249	4AO	6·0	6·0	
P	2 6300	2 6900	1 34250	4A/5B	6·0	6·0	
P	2 6900	2 7200	1 34251	4AO	3·0	3·0	
P	2 7200	2 7800	1 34252	4L7	6·0	6·0	Au, Cu only.
P	2 7800	2 8400	1 34253	4L07	6·0	5·6	" " "
P	3 2700	3 3300	1 34254	4L7	6·0	6·0	Au, Cu, only
P	3 3300	3 3900	1 34255	4L7	6·0	6·0	" " "
P	3 3900	3 4500	1 34256	4L7	6·0	6·0	" " "
P	3 4500	3 5100	1 34257	4L7	6·0	6·0	" " "
P	3 5100	3 5700	1 34258	4L7	6·0	6·0	" " "

DDH V-35-R (2 / 8)

Cyprus Anvil Mining Corp.
Geochemical Log (Sampler's Copy)

Logged By: _____

Sampled By: _____

Code	From	To	Sample No.	Description			
1	10 14	16 20	22 27	UNIT	LENGTH	REC.	
P	A1210	A1216	134159	4L67	6.0	6.0	Au, Cu, Ore
P	A1216	A1320	134160	4L67	6.0	6.0	" " "
P	A1320	A1380	134161	4L67	6.0	6.0	" " "
P	A1380	A1440	134162	4L67	6.0	6.0	" " "

CYPRUS ANVIL MINING CORPORATION

DIAMOND DRILL CORE LOG

Hole Number: V-47-R

Project: VANGORDA

Location: VANGORDA PLATEAU

Claim: _____

Terr. Plane Co-ords.: _____ N

_____ E

Grid Co-ords.: _____

_____

Elevation: _____

Fabric Orientation Diagram:

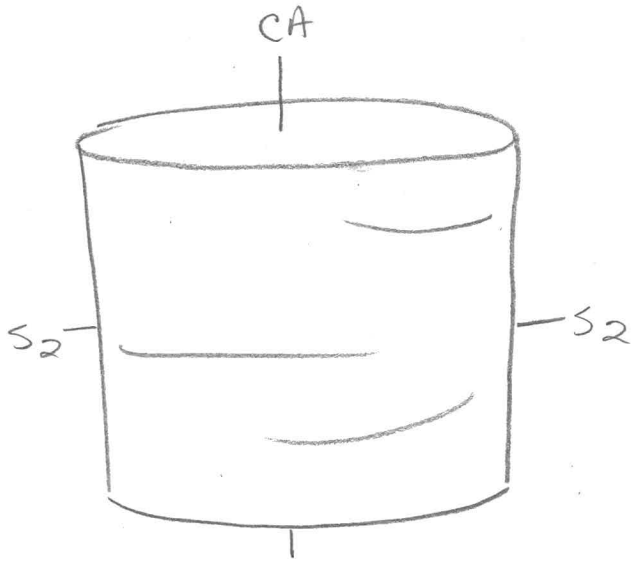

All symmetry determinations looking NW with S_2 dipping SW with dip azimuth 220.

Total Depth: 580.0

Purpose: _____

Logged by: JWM Date(s) Logged: _____

Drilling Contractor: A.D.D.

Core: Size From To Collar Cased and Capped: ____

_____ _____ _____

_____ _____ _____

_____ _____ _____

Started: _____ Completed: _____

Cyprus Anvil Mining Corp.
Diamond Drill Core Log

DDH V-47-R (2–8)

Code	Drillhole	Elevation	Northing	Easting	Comments
	2 8	10 16	17 24	25 32	34 48
T	V-47-R	1149.89	9033011.9	5940533.4	FEET

Code	Drillhole	Depth	Zenith Angle	True Azimuth	Comments
	2 8	10 14	22 26	28 32	34 56
R	V-47-R	0 0	180.0	.	ATCOLLAR
R	V-47-R	1620	178.0	938.0	
R	V-47-R	2620	178.2	043.0	
R	V-47-R	3350	178.0	093.0	GYRO SURVEY
R	V-47-R	3620	177.2	073.0	ACID ZEN = 178° @ 338'
R	V-47-R	4620	172.2	983.0	ACID ZEN = 176° @ 448'
R	V-47-R	5620	170.8	083.0	ACID ZEN = 172° @ 548'
R		.	.	.	
R		.	.	.	
R		.	.	.	
R		.	.	.	
R		.	.	.	
R		.	.	.	
R		.	.	.	
R		.	.	.	

Code	Drillhole	Comments, Errant Remarks, Snivellings and/or Lewd Suggestions
	2 8	10 47

DDH V-47-R (2 8)

Cyprus Anvil Mining Corp.

Lithologic Log

Logged By: JWM

Code	From	To	Unit	Code	Description
1	10 14	16 20	22 23	25 27	
L	0	1106	01		TRICONED NO CORE
L	1100	1330	02	4A0	Pb+Zn ≈ 4% overall, very graphitic
L	1330	1380	02	4GP	Fine grained, locally 4FL
L	1380	1415	03	4EEK	50/40/10, minor baritic facies
L	1415	1440	04	4EK	50/50
L	1440	1500	05	4G8	mish mash of ~~4G~~ 0 + 4G8 where 4G8 occurs 4G is coarse grained.
L	1500	1580	06	4K37	Variably calc.
L	1580	1608	07	4G8	med. grained.
L	1608	1641	08	4L0	0.5' 50 2 Rk. at beginning of interval.
L	1641	1705	09	4E0	→ 4E8
L	1705	1785	10	4G8	Coarse grained variant
L	1785	1814	11	5D6	
L	1814	1885	12	4E0	→ 4E8
L	1885	2038	13	4G8	Variably calcareous throughout e.g. Variant of 4G with Fe_2O_3
L	2038	2067	14	4L1	20% carbonates - fizzes in 10% 20% silica.
L	2067	2125	15	4E8	
L	2125	2260	16	4C0	→ 4CE, ≈ 70-80% FeS, minor magnetite. + minor Po
L	2260	2553	17	4C0	≈ 20-50% Py, 0-5% po, minor mag. Variable cpy - overall quite low Variable base metal overall " " in areas approaches "4L texture"
L	2553	2612	18	4C0	as above but Variably calcareous
L	2612	2820	19	4C8	Variable base metals → 4D8
L	2820	2825	20	5D0	Calcareous
L	2825	2880	21	4D07	
L	2880	3056	22	4C0	→ 4C8 Variable Fe_2O_3 locally to 4D, Variable Cu content, locally to 4C9
L	3056	3146	23	4L0	
L	3146	3380	24	4L0	→ 4L9, Variably calc. throughout carbonates as distinct laminations + nodules within 4L Split for Cu, Au

DDH V-47-R (2 8)

Cyprus Anvil Mining Corp.

Lithologic Log

Logged By: JWM

Code	From	To	Unit	Code	Description
1	10 14	16 20	22 23	25 27	
L	13380	13500	25	4LO	→ 4L6 minor carbonates
L	13500	13700	26	5B2	musc >> chlorite (musc+chl = 5%?)
L	13700	13840	27	4L3	calcareous.
L	13840	14190	28	4L67	Variably calcareous throughout.
L	14190	14485	29	4L76	91 Split for Cu, Au
L	14485	14580	30	4LV	796 " " " "
L	14580	14880	31	5B6	19 locally → 4L6
L	14880	15080	32	4L67	Variably calcareous
L	15080	15137	33	4L3	
L	15137	15148	34		Fault gouge.
L	15148	15280	35	4LO	
L	15280	15320	36	4A1O	
L	15320	15360	37	4K1O	
L	15360	15800	38		In + out of Fault zone 60-70% Fault gouge 40-30% SD6 Z.Rk. difficult if not useless to determine with breaks within this zone.

DDH V-47-R (2 / 8)

Cyprus Anvil Mining Corp.
Structural Log

Logged By: IWM

Code	From	To	Feature	Sym	S_1 Dip Direct.	S_2 Dip Direct.	Description
	10 14	16 20	22 24	26	28 32	34 38	
S		1112.0	FS2			210 2210	
S		1119.0	FS2			35 2210	
S		1133.0	FS2	Z		60 2210	
S		1148.0	S2			710 2210	
S		1168.0	S2			73 2210	
S		1178.0	S2			710 2210	
S		1198.0	S2			715 2210	
S		1210.80	S2			813 2210	
S		1236.0	S2			710 2210	
S		1258.0	S2			715 2210	
S		1278.0	S2			810 2210	
S		1298.0	S2			810 2210	
S		1306.0	S2			810 2210	R region 133-306
							S11 Fiskod 4L
S		1316.4	GS2	S		810 2210	
S		1318.0	GS2	Z			Z region 316.4 - 318.0
S		1331.3	GS2	M		715 2210	
S		1348.0	GS2			810 2210	
S		1358.0	GS2			710 2210	
S		1368.0	GS2			710 2210	
S		1380.0	GS2			810 2210	
S		1397.0	GS2	S			S region 348.0-397.0
S		1408.0	GS2	M		810 2210	
S		1428.0	GS2	S		513 2210	408-428 S region
S		1448.0	PS2			810 2210	
S		1458.0	PS2			615 2210	
S		1468.0	PS2			610 2210	
S		1487.0	PS2			710 2210	
S		1498.0	PS2	A		815 2210	No symm observed.
S		1507.0	PS2	S		710 2210	
S		1528.0	PS2			510 2210	
S		1580.0	S2			610 2210	536-580 broken tripped
							core, where S2 is observable
							at 45 to core axis very wiggly

DDH V-47-R (2 – 8)

Cyprus Anvil Mining Corp.
Geochemical Log (Sampler's Copy)

Logged By: IWM

Sampled By:

Code	From	To	Sample No.	Description		
1	10 – 14	16 – 20	22 – 27	UNIT	LENGTH	REC.
P	1106	1150	V 3199	4A0	4.4	4.1
P	1150	1200	V 3200	4A0	5.0	5.0
P	1200	1250	V 3301	4A0	5.0	5.0
P	1250	1300	V 3302	4A0	5.0	5.0
P	1300	1330	V 3303	4A0	3.0	3.0
P	1330	1380	V 3304	4G0	5.0	5.0
P	1380	1430	V 3305	4EFK	5.0	5.0
P	1430	1480	V 3306	4G8/E	5.0	5.0
P	1480	1500	V 3307	4G8	2.0	2.0
P	1500	1580	V 3308	4L37	8.0	8.0
P	1580	1608	V 3309	4G8	2.8	2.8
P	1608	1641	V 3310	4L0	3.3	3.3
P	1641	1705	V 3311	4E0	6.4	6.4
P	1705	1745	V 3312	4G8	4.0	4.0
P	1745	1785	V 3313	4G8	4.0	4.0
P	1785	1835	V 3314	4E/5D	5.0	5.0
P	1835	1885	V 3315	4E0	5.0	5.0
P	1885	1930	V 3316	4G8	4.5	4.5
P	1930	1980	V 3317	4G8	5.0	5.0
P	1980	2038	V 3318	4G8	5.8	5.8
P	2038	2067	V 3319	4L1	2.9	2.9
P	2067	2125	V 3320	4E8	5.8	5.8
P	2125	2180	V 3321	4C0	5.5	5.5
P	2180	2230	V 3322	4C0	5.0	5.0
P	2230	2290	V 3323	4C0	6.0	6.0
P	2290	2350	V 3324	4C0	6.0	6.0
P	2350	2410	V 3325	4C0	6.0	6.0
P	2410	2470	V 3326	4C0	6.0	6.0
P	2470	2530	V 3327	4C0	6.0	6.0
P	2530	2560	V 3328	4C0	3.0	3.0
P	2560	2620	V 3329	4C0	6.0	6.0
P	2620	2680	V 3330	4C8	6.0	6.0
P	2680	2720	V 3331	4C8	4.0	4.0
P	2720	2780	V 3332	4C8	6.0	6.0
P	2780	2825	V 3333	4C8	4.5	4.5

DDH V-47-R (2 / 8)

Cyprus Anvil Mining Corp.
Geochemical Log (Sampler's Copy)

Logged By: _____

Sampled By: _____

Code	From	To	Sample No.	Description			
1	10 14	16 20	22 27	UNIT	LENGTH	REC.	
P	12812 5	12818 0	V1 132913	4D07	5.5	5.5	
P	12818 0	12940	V1 132914	4C0	6.0	6.0	
P	12940	13000	V1 132915	4C0	6.0	6.0	
P	13000	13060	V1 132916	4C0	6.0	6.0	
P	13060	13120	V1 132917	4L0	6.0	6.0	Cu, Au Only
P	13120	13180	V1 132918	4L0	6.0	6.0	" " "
P	13180	13240	V1 132919	4L0	6.0	6.0	" " "
P	13240	13290	V1 133001	4L0	5.0	5.0	" " "
P	13290	13340	V1 133511	4L0	5.0	5.0	" " "
P	13340	13380	V1 133512	4L0	4.0	4.0	" " "
P	13840	13900	V1 133513	4L0	6.0	6.0	Cu, Au only
P	13900	13960	V1 133514	4L0	6.0	6.0	" " "
P	13960	A020	V1 133515	4L0	6.0	6.0	" " "
P	A020	A080	V1 133516	4L0	6.0	6.0	" " "
P	A080	A140	V1 133517	4L0	6.0	6.0	" " "
P	A140	A200	V1 133518	4L0	6.0	5.8	" " "
P	A200	A260	V1 133519	4L0	6.0	5.6	" " "
P	A260	A320	V1 133610	4L0	6.0	6.0	" " "
P	A320	A380	V1 133611	4L0	6.0	6.0	" " "
P	A380	A440	V1 133612	4L0	6.0	6.0	" " "
P	A440	A500	V1 133613	4L0	6.0	6.0	" " "
P	A500	A580	V1 133614	4L0	8.0	8.0	" " "

CYPRUS ANVIL MINING CORPORATION

DIAMOND DRILL CORE LOG

Hole Number: V-94-R

Project: VANGORDA

Location: VANGORDA PLATEAU

Claim: _____

Terr. Plane Co-ords.: _____ N

_____ E

Grid Co-ords.: _____

_____

Elevation: _____

Fabric Orientation Diagram:

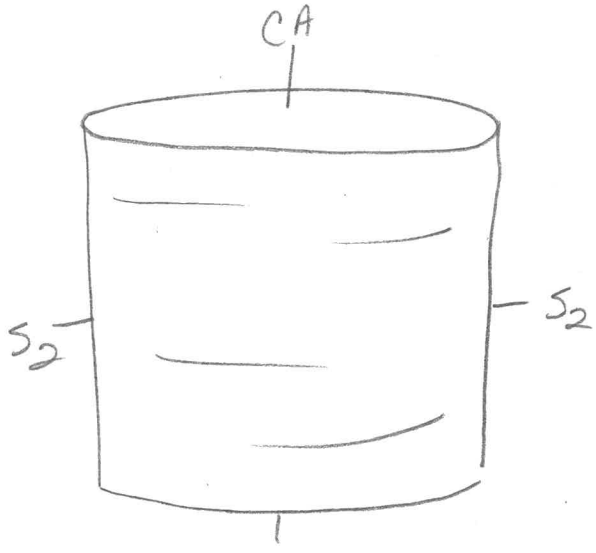

All symmetry determinations looking NW with S_2 dipping SW with dip azimuth 220.

Total Depth: 546.5

Purpose: _____

Logged by: D.J.H Date(s) Logged: _____

Drilling Contractor: A.D.D.

Core: Size From To Collar Cased and Capped: ____

_____ _____ _____

_____ _____ _____

_____ _____ _____

Started: _____ Completed: _____

Cyprus Anvil Mining Corp.
Diamond Drill Core Log

DDH V-094-R
2 8

Code	Drillhole	Elevation	Northing	Easting	Comments
1	2 8	10 16	17 24	25 32	34 48
T	V-094-R	1150.04	903319.8	594076.8	FEET

Code	Drillhole	Depth	Zenith Angle	True Azimuth	Comments
1	2 8	10 14	22 26	28 32	34 56
R	V-094-R	0 0	189.0	020.0	AT COLLAR
R	V-094-R	136 0	178.0	023.0	NO ACID ZEW
R	V-094-R	236 0	177.0	028.0	NO ACID ZEW
R	V-094-R	336 0	175.5	056.0	NO ACID ZEW
R	V-094-R	436 0	172.5	070.0	NO ACID ZEW
R	V-094-R	536 0	170.0	081.0	ACID ZEW=172
R			.	.	
R			.	.	
R			.	.	
R			.	.	
R			.	.	
R			.	.	
R			.	.	
R			.	.	
R			.	.	
R			.	.	

Code	Drillhole	Comments, Errant Remarks, Snivellings and /or Lewd Suggestions
1	2 8	10 47

DDH V-09A-R (2 / 8)

Cyprus Anvil Mining Corp.
Lithologic Log

Logged By: DJH

Code	From ft	To ft	Unit	Code	Description
1	10 14	16 20	22 23	25 27	
L	11000	11825	1	1 #	%B - granitic boulders
L	11825	11850	12	4G14	
L	11850	11862	13	4H11	~50% po
L	11862	11870	14	5D13	
L	11870	11885	15	4H11	
L	11885	11952	16	4G14	w/ 20% interbanded 4E
L	11952	11998	17	4E10	
L	11998	12015	18	4G14	
L	12015	12040	19	4L17	→ 4L74
L	12040	12055	110	4H11	→ 4H14
L	12055	12081	111	5D16	bright green chlorite
L	12081	12123	112	4H11	~20% qtzite & 5D3 breccia frags. & bands; → 4H14
L	12123	12186	113	4A10	
L	12186	12475	114	5B10	
L	12475	12497	115	4A10	20% 5B; breccia
L	12497	12505	116	4G14	
L	12505	12640	117	4A10	
L	12640	12650	118	4E10	→ 4E4
L	12650	12665	119	4G14	
L	12665	12680	210	5D16	bright green chlorite
L	12680	13000	211	4G14	
L	13000	13130	212	4J18	
L	13130	13837	213	4G10	→ 4G48 locally.
L	13837	13930	214	4D10	w/ minor 4G interbanded
L	13930	13955	215	4A10	
L	13955	13985	216	4C17	→ 4C79
L	13985	14110	217	4C18	→ 4C89
L	14110	14512	218	4C19	
L	14512	14820	219	4C17	→ 4L17 locally; → 4L79
L	14820	15080	310	4L13	→ 4L37; white mica alt.
L	15080	15366	311	4L10	→ 4L07; minor white mica alt.; chl. alt?;
L	15366	15390	312	4L13	white mica alt.; → 4L37
L	15390	15527	313	4L10	→ 4L07; as unit 31 but w/ decreasing patchy & S12 foliaform PO

DDH V-094-R (2 / 8)

Cyprus Anvil Mining Corp.
Lithologic Log

Logged By: DJH.

Code	From ft.	To ft.	Unit	Code	Description
1	10 14	16 20	22 23	25 27	
L	13512 7	13714 0	314	5B17	→ 5B73; minor white mica & chl? alt.
L	13714 0	13815 6	315	5B10	
L	13815 6	14113 0	316	5B17	→ 5B73; as unit 34
L	14113 0	15117 0	317	5B17	→ 5B76; → 5B769 locally w/ patchy & SIR foliaform po; minor white mica & chl? alt.; minor 4L672 interbanded and increasing toward end of int.
L	15117 0	15319 0	318	4L13	white mica alt. related to fault gouge 527-537?; no sdes.
L	15319 0	15916 5	319	5B16	
		EOH.			

DDH V-09-4-R (2 / 8)

Cyprus Anvil Mining Corp.
Structural Log

Logged By: DJH

Code	From	To ft	Feature	Sym	S_1 Dip Direct.	S_2 Dip Direct.	Description
	10 14	16 20	22 24	26	28 32	34 38	
S		1835	PIS12			715 220	PS2 from 82.5-102.
S		11011 0	PIS12			712 220	(comp. layering in sdes.)
S		11012 0	IF12	S			S sym. from 102-130
S		11210 0	CIS12			715 220	
S		11310 0	IF12	Z			Z sym from 130-167
S		11410 0	CIS12			715 220	
S		11517 0	CIS12			313 220	
S		11617 0	IF12	Z			PS2 from 167-214
S		11717	PIS12			710 220	(comp. layering in sdes.)
S		11917	PIS12			713 220	(comp. layering in sdes.)
S		12114	IF12	S			S sym from 214-228
S		12119	CIS12			810 220	
S		12218	IF12	S			PS2 from 228-268
S		12318	PIS12			615 220	(comp. layering in sdes.)
S		12518	PIS12			615 220	" " "
S		12618	IF12	Z			Z sym from 268-301
S		12718	CIS12			615 220	
S		12918	CIS12			812 220	
S		13011	IF12	3			S sym. from 301-363
S		13118	CIS12			810 220	
S		13318	CIS12			710 220	
S		13518	CIS12			810 220	
S		13613	IF12	S			Ind. sym. 363-6381 (Possible S sym)
S		13718	CIS12			712 220	
S		13811	IF12	S			S sym from 381-406)
S		13918	CIS12			518 220	
S		14016	IF12	S			Ind. sym. from 406-423
S		14118	CIS12			710 220	
S		14213	IF12	S			S sym from 423-470
S		14316	CIS12			617 220	
S		14516	CIS12			718 220	
S		14710	IF12	Z			Z sym. from 470-484
S		14717 5	CIS12			715 220	
S		14814	IF12	3			S sym from 484-4546.5
S		14915	CIS12			715 220	
S		15118	CIS12			712 220	

DDH V-094-R (2 / 8)

Cyprus Anvil Mining Corp.
Geochemical Log (Sampler's Copy)

Logged By: DJH

Sampled By:

Code	From ft.	To ft.	Sample No.	Unit	Rec	Length	% Rec	Description
1	10 14	16 20	22 27					
P	1 1825	1 1862	1V101619	4GH	3.7	3.7	100	
						0.8		
P	1 1870	1 1920	1V101710	4GH	5.0	5.0	100	
P	1 1920	1 1952	1V101711	4G4	3.2	3.2	100	
P	1 1952	1 1998	1V101712	4EO	4.6	4.6	100	
P	1 1998	1 2015	1V101713	4G4	1.6	1.7	94	
P	1 2015	1 2040	1V101714	4L7	2.5	2.5	100	
P	1 2040	1 2055	1V101715	4HI	1.5	1.5	100	
P	1 2055	1 2081	1V101716	5D6	2.3	2.6	88	
P	1 2081	1 2123	1V101717	4HI	4.2	4.2	100	
P	1 2123	1 2186	1V101718	4AO	6.2	6.3	98	
P	1 4175	1 5055	1V101719	4AG	3.0	3.0	100	
P	1 5055	1 5550	1V101810	4AO	4.5	4.5	100	
P	1 5550	1 6100	1V101811	4AO	5.0	5.0	100	
P	1 6100	1 6400	1V101812	4AO	4.0	4.0	100	
P	1 6400	1 6655	1V101813	4GE	2.5	2.5	100	
						1.5		
P	1 6180	1 7330	1V101814	4GJ	4.9	5.0	98	
P	1 7330	1 7780	1V101815	4G4	5.0	5.0	100	
P	1 7780	1 8337	1V101816	4G4	5.0	5.7	88	
P	1 8337	1 8780	1V101817	4DO	4.3	4.3	100	
P	1 8780	1 9330	1V101818	4DO	5.0	5.0	100	
P	1 9330	1 9555	1V101819	4AO	2.0	2.5	80	
P	1 9555	1 9885	1V101910	4C7	3.0	3.0	100	
P	1 9885	2 0355	1V101911	4C8	4.9	5.0	98	
P	2 0355	2 0775	1V101912	4C8	4.0	4.0	100	
P	2 0775	2 1 0	1V101913	4C8	3.5	3.5	100	
P	2 1 0	2 1 60	1V101914	4C9	5.0	5.0	100	
P	2 1 60	2 2 1 0	1V101915	4C9	5.0	5.0	100	
P	2 2 1 0	2 2 60	1V101916	4C9	5.0	5.0	100	
P	2 2 60	2 3 1 0	1V101917	4C9	5.0	5.0	100	
P	2 3 1 0	2 3 60	1V101918	4C9	5.0	5.0	100	
P	2 3 60	2 4 1 0	1V101919	4C9	5.0	5.0	100	
P	2 4 1 0	2 4 60	1V102010	4C9	5.0	5.0	100	
P	2 4 60	2 5 27	1V102011	4C9	5.8	6.7	87	

DDH V-094-R (2 / 8)

Cyprus Anvil Mining Corp.
Geochemical Log (Sampler's Copy)

Logged By: DJH.

Sampled By:

Code	From ft.	To ft.	Sample No.	UNIT	Rec	Description Length	% REC
1	10 14	16 20	22 27				
P	12512 7	12517 0	IV012012	4C7	4.3	4.3	100
P	12517 0	12620	IV012013	4C7	5.0	5.0	100
P	12620	12670	IV012014	4C7	5.0	5.0	100
P	12670	12720	IV012015	4C7	5.0	5.0	100
P	12720	12770	IV012016	4C7	5.0	5.0	100
P	12770	12820	IV012017	4C7	5.0	5.0	100
P	12820	12870	IV012018	4L1	5.0	5.0	100
				TOT.	170.5	173.3	98%

CYPRUS ANVIL MINING CORPORATION

DIAMOND DRILL CORE LOG

Hole Number: V-95-R

Project: VANGORDA

Location: VANGORDA PLATEAU

Claim: _____

Terr. Plane Co-ords.: _____ N

_____ E

Grid Co-ords.: _____

_____

Elevation: _____

Total Depth: 541.0

Fabric Orientation Diagram:

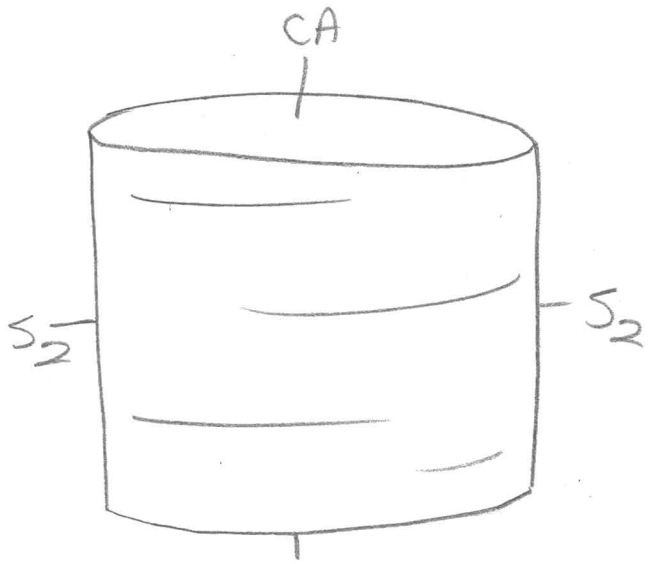

All symmetry determinations looking

NW with S_2 dipping

SW with dip azimuth 220°.

Purpose: _____

Logged by: D.J.H. Date(s) Logged: _____

Drilling Contractor: A.D.D. Core: Size From To Collar Cased and Capped: _____

_____ _____ _____

_____ _____ _____

_____ _____ _____

Started: _____ Completed: _____

Cyprus Anvil Mining Corp.
Diamond Drill Core Log

DDH V-095-R

Code	Drillhole	Elevation	Northing	Easting	Comments
T	V-095-R	1149.43	903279.1	594039.4	FEET

Code	Drillhole	Depth		Zenith Angle		True Azimuth	Comments
R	V-095-R	0	0	180.0	0	032.0	AT COLLAR
R	V-095-R	1138	0	177.7	7	036.0	NO ACID TESTS
R	V-095-R	1238	0	177.0	0	040.0	
R	V-095-R	1338	0	177.5	0	042.0	
R	V-095-R	1438	0	173.5	0	061.0	
R	V-095-R	1538	0	170.0	0	070.0	
R							
R							
R							
R							
R							
R							
R							
R							
R							
R							

Code	Drillhole	Comments, Errant Remarks, Snivellings and/or Lewd Suggestions

DDH V-095-R (2–8)

Cyprus Anvil Mining Corp.
Lithologic Log

Logged By: DJH.

Code	From ft	To ft	Unit	Code	Description
1	10–14	16–20	22 23	25 27	
L	100	1005	1	#	O/B
L	1005	1245	2	4L7	~5% po – patchy & S2 foliaform
L	1245	1485	3	5B7	→ 5B76 ; → 4L67 locally
L	1485	1577	4	4L7	as unit 2
L	1577	1635	5	4G4	~12% Pb+Zn ; minor 5D3 interbanded.
L	1635	1675	6	5D3	w/ minor 4G4 interbanded
L	1675	1695	7	4G4	
L	1695	1715	8	4L3	white mica alt.
L	1715	1740	9	4G4	
L	1740	1778	10	4F4	→ 4F43 ; fine grained equiv. of FARO
					"buckshot" facies ; +15% Pb+Zn
L	1778	1820	11	4G4	
L	1820	1847	12	4F4	→ 4F43 as unit 10 ; → 4J4 locally
L	1847	1948	13	4G4	w/ minor 4F43 and 4L interbanded
L	1948	1990	14	4F4	→ 4F43 as unit 10 & 12 ; 4F436?
					w/ pinkish sph./barite mixture? ;
					10% siliceous frags w/ random S2
					orientations floating in massive
					sulfide matrix.
L	1990	2055	15	4G4	→ 4G48 w/ ~1% magnetite porphs ;
					~20% 4E interbanded
L	2055	2240	16	4E0	gritty, vuggy massive py w/ ~10%
					4G interbanded ; lost core
L	2240	2409	17	4E1	w/ ~10% interbanded 4C ; minor
					Fe_3O_4 lams.
L	2409	2660	18	4EG	50:50 interbanded 4E4 : 4G4 → 4G FROM ASSAYS
L	2660	3005	19	4CE	60:40 " 4C0 : 4E0
L	3005	3335	20	4CE	→ 4CE8 ; as unit 19 but w/ Fe_3O_4
					lams. ; 60% tot. sdes in units 19 & 20
L	3335	3365	21	4L3	white mica alt ; <2% Pb+Zn (4L34)
L	3365	3488	22	4L3	" " " ; → 4L37
L	3488	4175	23	4L2	→ 4L27 ; decreasing white mica dev ;
					~5% py/po
L	4175	4520	24	4L0	→ 4L027 ; minor white mica & chl? alt ;
					fault gouge 513-521 @ 25° to C.A.
					w/ dip direction 180° to S2 @ upper ct.
					minor py/po

DDH V-09S-R (2 / 8)

Cyprus Anvil Mining Corp.
Lithologic Log

Logged By: DJH.

Code	From ft.	To ft.	Unit	Code	Description
1	10 14	16 20	22 23	25 27	
					white mica & talc? alt around fault gouge;
2	14520	15191 0	215	51817	→ 5B76; → 5B769 locally.
		EOH.			

DDH V-095R (2 / 8)

Cyprus Anvil Mining Corp.
Structural Log

Logged By: DJH

Code	From	To	Feature	Sym	S_1 Dip Direct.	S_2 Dip Direct.	Description
1	10 14	16 20	22 24	26	28 32	34 38	
S		1/1014 0	CIS12			717 220	S sym. 100-113
S		1/1130	IF12	E		715 220	Z sym. 113-120
S		1/1200	IF12	3		514 220	S sym 120-150
S		1/1410 0	CIS12			710 220	
S		1/1510	IF12	E			Z sym 150-160
S		1/1610	IF12	3		512 220	No sym determinations
							possible in sulfides
							160-333
S		1/1810 0				715 2210	comp. layering in sulfides
S		1/2010 0				616 220	" "
S		1/2117 0				715 220	" "
S		1/2139 0				610 220	" "
S		1/2151 0				712 220	" "
S		1/2169 0				714 220	" "
S		1/2189 0				612 220	" "
S		1/3112 0				719 220	" "
S		1/3131 0				710 220	" "
S		1/3333 0	IF12	Z			Z sym 333-~~358~~ 351
S		1/3151 0	IF12	3		718 220	S sym 351-360
S		1/3610 0	IF12	E			Z sym 360-412
S		1/3711 0	CIS12			715 220	
S		1/3911 0	CIS12			612 220	
S		1/4112 0	IF12	3		615 220	S sym 412-541
S		1/4313 0	CIS12			710 220	
S		1/4513 0	CIS12			715 220	
S		1/4713 0	CIS12			619 220	
S		1/4915 0	CIS12			718 220	
S		1/5113 0	CIS12			715 220	
S		1/5313 0	CIS12			618 220	
		EOH					

DDH V-095-R (2 / 8)

Cyprus Anvil Mining Corp.
Geochemical Log (Sampler's Copy)

Logged By: DJH.

Sampled By: ALeF.

Code	From	To	Sample No.	Rec.	Description		
					Unit	Length	Rec %
1	10 14	16 20	22 27				
P	1/1517	1/1613	1V01/1313	5.5	4G4	5.8	95
P	1/1613	1/1675	1V01/1314	4.0	5D3	4.0	100
P	1/1675	1/1715	1V01/1315	4.0	4GL	4.0	100
P	1/1715	1/1740	1V01/1316	2.5	4G4	2.5	100
P	1/1740	1/1778	1V01/1317	3.0	4F4	3.8	79
P	1/1778	1/1820	1V01/1318	4.2	4G4	4.2	100
P	1/1820	1/1847	1V01/1319	2.7	4F4	2.7	100
P	1/1847	1/1897	1V01/1410	5.0	4G4	5.0	100
P	1/1897	1/1948	1V01/1411	5.1	4G4	5.1	100
P	1/1948	1/1990	1V01/1412	4.2	4F4	4.2	100
P	1/1990	2/0155	1V01/1413	5.5	4G4/4E	6.5	85
P	2/0155	2/1134	1V01/1414	2.2	4EO	7.9	28
P	2/1134	2/1776	1V01/1415	4.2	4EG4	4.2	100
P	2/1776	2/2140	1V01/1416	4.7	4EO	6.4	73
P	2/2140	2/2290	1V01/1417	5.0	4EI	5.0	100
P	2/2290	2/3140	1V01/1418	5.0	4EI	5.0	100
P	2/3140	2/4109	1V01/1419	6.9	4EI	6.9	100
P	2/4109	2/4160	1V01/1510	5.1	4EG	5.1	100
P	2/4160	2/5110	1V01/1511	5.0	4EG	5.0	100
P	2/5110	2/5610	1V01/1512	5.0	4EG	5.0	100
P	2/5610	2/6110	1V01/1513	5.0	4EG	5.0	100
P	2/6110	2/6660	1V01/1514	5.0	4EG	5.0	100
P	2/6660	2/7110	1V01/1515	5.0	4CE	5.0	100
P	2/7110	2/7610	1V01/1516	5.0	4CE	5.0	100
P	2/7610	2/8110	1V01/1517	5.0	4CE	5.0	100
P	2/8110	2/8660	1V01/1518	5.0	4CE	5.0	100
P	2/8660	2/9110	1V01/1519	5.0	4CE	5.0	100
P	2/9110	2/9660	1V01/1610	5.0	4CE	5.0	100
P	2/9660	3/0910	1V01/1611	5.0	4CE	5.0	100
P	3/0910	3/0660	1V01/1612	5.0	4CE	5.0	100
P	3/0660	3/1110	1V01/1613	5.0	4CE	5.0	100
P	3/1110	3/1660	1V01/1614	5.0	4CE	5.0	100
P	3/1660	3/2110	1V01/1615	5.0	4CE	5.0	100
P	3/2110	3/2660	1V01/1616	5.0	4CE	5.0	100
P	3/2660	3/3335	1V01/1617	7.4	4CE	7.5	99
P	3/3335	3/4105	1V01/1618	7.0	4L4	7.0	100
				173.20		182.80	95

CYPRUS ANVIL MINING CORPORATION

DIAMOND DRILL CORE LOG

Hole Number: V-96-R

Project: VANGORDA

Location: VANGORDA PLATEAU

Claim: _____

Terr. Plane Co-ords.: _____ N

_____ E

Grid Co-ords.: _____

_____

Elevation: _____

Total Depth: 528.5

Fabric Orientation Diagram:

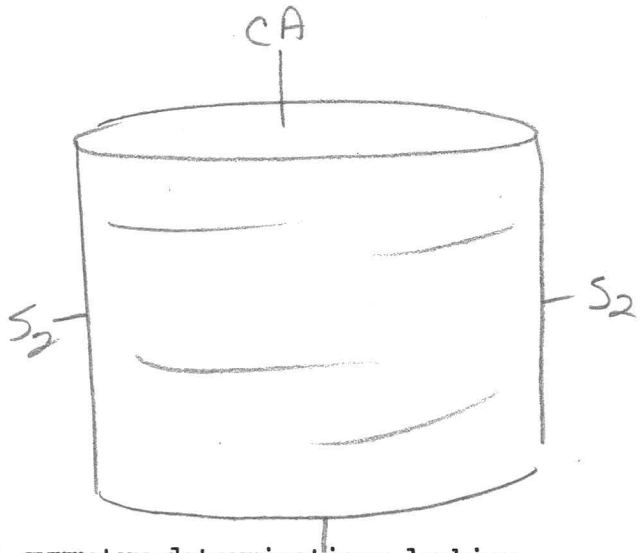

All symmetry determinations looking NW with S_2 dipping SW with dip azimuth 220.

Purpose: _____

Logged by: DJH Date(s) Logged: _____

Drilling Contractor: A.DD. Core: Size From To Collar Cased and Capped: _____

_____ _____ _____

_____ _____ _____

_____ _____ _____

Started: _____ Completed: _____

Cyprus Anvil Mining Corp.

Diamond Drill Core Log

DDH V-096-R

Code	Drillhole	Elevation	Northing	Easting	Comments
1	2 8	10 16	17 24	25 32	34 48
T	V-096-R	1148.08	9032421.8	5939851.1	FEET

Code	Drillhole	Depth	Zenith Angle	True Azimuth	Comments
1	2 8	10 14	22 26	28 32	34 56
R	V-096-R	100	1801.0	0101.0	ATCOLLAR
R	V-096-R	1080	1791.0	0201.0	NO ACID TEST
R	V-096-R	2080	1781.0	0421.0	ACID ZEM = 179°
R	V-096-R	3180	1771.7	0618.0	ACID ZEN = 177°
R	V-096-R	4380	1751.8	0618.0	ACID ZEM = 177°
R	V-096-R	5100	1751.2	0980.0	ACID ZEM = 176°
R			.	.	
R			.	.	
R			.	.	
R			.	.	
R			.	.	
R			.	.	
R			.	.	
R			.	.	
R			.	.	
R			.	.	

Code	Drillhole	Comments, Errant Remarks, Snivellings and/or Lewd Suggestions
1	2 8	10 47

DDH V-096-R (2 / 8)

Cyprus Anvil Mining Corp.

Lithologic Log

Logged By: DJH

Code	From	To	Unit	Code	Description
1	10 14	16 20	22 23	25 27	
L	1 1 100	1/1/100	1/	1 #	%B - triconed - no core
L	1/1/100	1/1417 0	12	5B17	→ 5B76; v. minor white mica (alt.?);
			1		surface weathering to 117'
L	1/1417 0	1/1515	13	4L13	→ 4L37 locally; white mica alt.
L	1/1515	1/1545	14	5D16	
L	1/1545	1/1570	15	4L13	as unit 3
L	1/1570	1/1625	16	5D16	
L	1/1625	1/1685	17	4L13	as units 3 & 5
L	1/1685	1/1955	18	5D16	→ 5D3 locally
L	1/1955	12/1385	19	5B16	
L	12/1385	12/1492	110	4L10	→ 4L7 locally; 4L3? locally.
L	12/1492	12/1520	111	4D18	→ 4D86 locally.
L	12/1520	12/1575	112	4E18	→ 4E86 locally; minor interbanded 4CD.
L	12/1575	12/1640	113	4E10	→ 4E8 locally.
L	12/1640	12/1652	114	5D16	bright green chl.;
L	12/1652	12/1666	115	4F14	fine grained "buckshot"
L	12/1666	12/1710	116	4L13	white mica alt; → 4L4 locally.
			1		30% QQ0
L	12/1710	12/1745	117	4E1G	70:30 interbanded 4E8 : 4G4; minor
			1		4A @ top of interval.
L	12/1745	12/1767	118	5B17	→ 5B769 (minor po) - no white mica alt;
			1		chl. alt.?
L	12/1767	12/1780	119	4C10	w/ dark grey qtzite bands.
L	12/1780	12/1805	210	4L13	white mica alt.; minor brecciation.
L	12/1805	12/1826	211	4E1G	as unit 17; minor qtzite breccia frags
L	12/1826	12/1841	212	5A1	
L	12/1841	12/1851	213	4L13	white mica alt; minor sdes.
L	12/1851	12/1940	214	4E1G	as units 17 & 21; minor qtzite frags;
			1		minor 4L0 interbanded
L	12/1940	13/1035	215	4L13	→ 4L7 locally; white mica alt.
L	13/1035	13/2140	216	5D13	weakly altered?; minor 4L interbanded;
			1		breccia & gouge throughout; minor sph
			1		rich stringers
L	13/2140	13/2555	217	4E14	20% qtzite frags.
L	13/2555	13/3161	218	4L13	→ 4L32 locally; 5D4?
L	13/3161	13/3380	219	4G10	

DDH V-096-R (2 / 8)

Cyprus Anvil Mining Corp.
Lithologic Log

Logged By: _____

Code	From	To	Unit	Code	Description
1	10 14	16 20	22 23	25 27	
L	131318 0	131419 5	310	5B16	→ 5B62 ; minor 4L interbanded
L	131419 5	141020 0	311	4L16	→ 4L6 ; w/ 20% interbanded 4LO (white mica alt.) ; minor py, po, sph. rich bands & thin lams ; quite possibly 5D69
L	141020 0	141760 0	312	4L16	→ 4L67 ; ; chl alt ? ; gouge 448–453
L	141760 0	141810 0	313	4L13	white mica alt.
L	141810 0	141830 0	314	4E18	w/ 4L? frags ; 4" 4A @ end of int
L	141830 0	141910 0	315	4L16	→ 4L67 as unit 32 ; gouge & bxia 488–491
L	141910 0	141918 5	316	4A1E	60:40 interbanded 4AO:4EO
L	141918 5	151013 5	317	4E18	→ 4E86 ; 20% qtzite frags & bands.
L	151013 5	151019 5	318	5A1/	
L	151019 5	151218 5	319	5D16	→ 5D3 locally ; possible minor white mica & talc alt.
		1E10H			

DDH V-096-R (2 / 8)

Cyprus Anvil Mining Corp.
Structural Log

Logged By: _____

Code	From	To	Feature	Sym	S_1 Dip Direct.	S_2 Dip Direct.	Description
1	10 14	16 20	22 24	26	28 32	34 38	
S		1/1/100	CIS12			815 220	S sym 109 - 126.5
S		1/1265	IF12	E			Z sym 126.5 - 142.0
S		1/1290	CIS12			815 220	
S		1/1420	IF12	3			S sym 142.0 - 179.0
S		1/1510 0	CIS12			816 220	
S		1/1700	CIS12			82 220	
S		1/1790	IF12	E			Z sym 179.0 - 249.0
S		1/1900	CIS12			814 220	
S		121/100	CIS12			816 220	
S		12300	CIS12			814 220	
S		12490	IF12	3		810 220	S sym 249.0 - 340.0
S		12710 0	CIS12			612 220	
S		12900	CIS12			618 220	
S		131/00	CIS12			413 220	
S		133/0	CIS12			617 220	
S		13400	IF12	E			Z sym 340.0 - 378
S		13510 0	CS12			718 220	
S		13710 0	CIS12			718 220	
S		13780	IF12	3			S sym 378 - 491
S		1391/0	CIS12			712 220	
S		141/00	CIS12			614 220	
S		14310 0	CIS12			714 220	
S		1451/0	CIS12			713 220	
S		1471/0	CIS12			614 220	
S		1491/0	IF12	S			PS2 491 - 528.5
S		14912 0	PIS12			810 220	
S		151/120	PIS12			415 220	
S		15280	PIS12			719 220	
		EOH					

DDH V-096-R (2 / 8)

Cyprus Anvil Mining Corp.
Geochemical Log (Sampler's Copy)

Logged By: DJH

Sampled By:

Code	From	To	Sample No.	UNIT	LENGTH	Description REC.
1	10 14	16 20	22 27			
P	12419 2	12512 0	1V012619	4D8	2.8	2.6
P	12512 0	12575	1V012710	4E8	5.5	5.3
P	12575	12605	1V012711	4EO	3.0	3.0
P	12605	12640	1V012712	4EO	3.5	3.5
P	12640	12652	1V012713	5D6	1.2	1.2
P	12652	12666	1V012714	4F4	1.4	1.4
P	12666	12710	1V012715	4LO	4.4	4.1
P	12710	12745	1V012716	4EG	3.5	3.5
P	12745	12767	1V012717	5B7	2.2	2.2
P	12767	12780	1V012718	4CO	1.3	1.2
P	12780	12805	1V012719	4LO	2.5	2.5
P	12805	12826	1V012800	4EG	2.1	2.1
P	12826	12851	1V012801	5A/4L	2.5	2.5
P	12851	12900	1V012802	4EG	4.9	4.9
P	12900	12940	1V012803	4EG	4.0	4.0
					43.70	
P	14910	14940	1V012814	4AE	3.0	3.0
P	14940	14985	1V012815	4AE	4.5	4.5
P	14985	15035	1V012816	4E8	5.0	5.0
					125	

CYPRUS ANVIL MINING CORPORATION

DIAMOND DRILL CORE LOG

Hole Number: V-126-R

Project: VANGORDA

Location: VANGORDA PLATEAU

Claim: _____

Terr. Plane Co-ords.: _____ N

_____ E

Grid Co-ords.: _____

_____

Elevation: _____

Fabric Orientation Diagram:

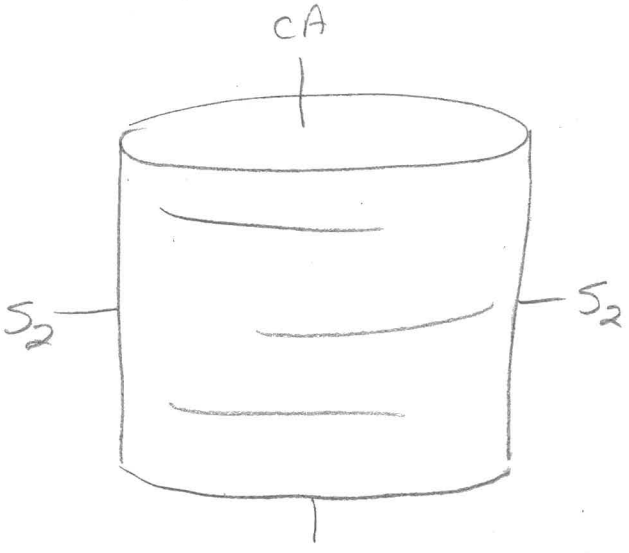

All symmetry determinations looking

NW with S_2 dipping

SW with dip azimuth 220.

Total Depth: 546.0

Purpose: _____

Logged by: DJH Date(s) Logged: _____

Drilling Contractor: A.D.D. Core: Size From To Collar Cased and Capped: ____

_____ _____ _____

_____ _____ _____

_____ _____ _____

Started: _____ Completed: _____

Cyprus Anvil Mining Corp.
Diamond Drill Core Log

DDH V1-1216-R

Code	Drillhole	Elevation	Northing	Easting	Comments
1	2 8	10 16	17 24	25 32	34 48
T	V1-1216-R	1142.35	9033661.1	594125.7	FIELD

Code	Drillhole	Depth	Zenith Angle	True Azimuth	Comments
1	2 8	10 14	22 26	28 32	34 56
R	V1-1216-R	0 0	1810.0	10.0	AT COLLAR
R	V1-1216-R	1310 0	1771.0	11.0	AZIMUTH=11
R	V1-1216-R	1710 0	1761.0	19.0	AZIMUTH=11
R	V1-1216-R	2100 0	1691.5	2741.0	*HIGH PO; AZIMUTH=11
R	V1-1216-R	5200 0	1651.5	3581.0	NO AZIMUTH
R		.	.	.	
R		.	.	.	*AZIMUTH CHANGED FROM
R		.	.	.	030° TO 274°
R		.	.	.	
R		.	.	.	
R		.	.	.	
R		.	.	.	
R		.	.	.	
R		.	.	.	
R		.	.	.	
R		.	.	.	

Code	Drillhole	Comments, Errant Remarks, Snivellings and/or Lewd Suggestions
1	2 8	10 47

8E

CYPRUS ANVIL MINING CORPORATION

DIAMOND DRILL CORE LOG

Hole Number: V-302

Project: VANGORDA

Location: VANGORDA PLATEAU

Claim: _____

Terr. Plane Co-ords.: _____ N

_____ E

Grid Co-ords.: _____

_____

Elevation: _____

Total Depth: 620.0

Fabric Orientation Diagram:

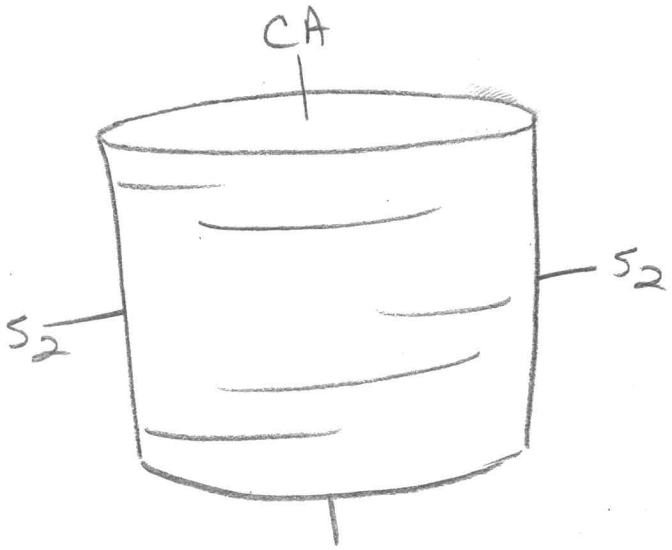

All symmetry determinations looking

NW with S2 dipping

SW with dip azimuth 220.

Purpose: _____

Logged by: JWM Date(s) Logged: _____

Drilling Contractor: A.D.D. Core: Size From To Collar Cased and Capped: ____

_____ _____ _____

_____ _____ _____

_____ _____ _____

Started: _____ Completed: _____

Cyprus Anvil Mining Corp.
Diamond Drill Core Log

DDH V-302
2 8

Code	Drillhole	Elevation	Northing	Easting	Comments
	2 8	10 16	17 24	25 32	34 48
T	V-302	11151.93	9032366.3	5940671.6	FEET

Code	Drillhole	Depth	Zenith Angle	True Azimuth	Comments
	2 8	10 14	22 26	28 32	34 56
R	V-302	0 0	180.0	0510.0	ATCOLLAR
R	V-302	1700	1761.2	0555.0	AZIMUTH=1718° @1718'
R	V-302	2900	1751.9	0610.0	AZIMUTH=1717° @2618'
R	V-302	4100	1741.4	0955.0	AZIMUTH=1746° @3646'
R	V-302	6000	1721.1	1117.0	AZIMUTH=NGL @4218'
R		.	.	.	AZIMUTH=1713° @5112'
R		.	.	.	AZIMUTH=1713° @6120'
R		.	.	.	
R		.	.	.	
R		.	.	.	
R		.	.	.	
R		.	.	.	
R		.	.	.	
R		.	.	.	
R		.	.	.	
R		.	.	.	

Code	Drillhole	Comments, Errant Remarks, Snivellings and/or Lewd Suggestions
	2 8	10 47

DDH 1-302 (2–8)

Cyprus Anvil Mining Corp.
Lithologic Log

Logged By: JWM

Code	From	To	Unit	Code	Description
1	10–14	16–20	22 23	25–27	
L	0 0	1375	01	#	triconed - NO CORE
L	1375	1405	02	4HE9	secondary pyrite growth resembles
					4J, unusual rock type - possibly
					supergene enriched zone?
L	1405	1430	03	4G0	30%? $BaSO_4$? Pb+Zn ≈ 12%
L	1430	1455	04	4E7	
L	1455	1465	05	4D7	
L	1465	1490	06	4G0	as in unit 3, interbanded 4E (20%)
L	1490	1535	07	4E0	"Sandy pyrite"
L	1535	1545	08	4L0	/5D
L	1545	1580	09	4E0	As in unit 7, interbanded 4F
					towards end of interval.
L	1580	1594	10	4G0	
L	1594	1619	11	4E1	
L	1619	1664	12	4E8	
L	1664	1727	13	4E64	locally 464
L	1727	1760	14	4E46	minor baritic interbands
L	1760	1790	15	4E1	
L	1790	1810	16	4G8	
L	1810	2006	17	4K0	very calcareous 10-15% calcite
					overall as isolated regions -
					as opposed to "interbanded".
L	2006	2021	18	4L0	Grotty sulfides /4L minor Fuchsite
					present possible tectonic zone.
L	2021	2060	19	4K0	As in unit 17
L	2060	2113	20	4EK8	carbonates finer grained - admixed with
					sulfides.
L	2113	2130	21	4G8	
L	2130	2198	22	4EK8	as in unit 20, increasing magnetite
					towards end of interval.
L	2198	2272	23	4F0	/4D 20% silica fragments throughout
					interval.
L	2272	2290	24	4G0	
L	2290	2380	25	4F0	60% 4C, 40% 4E, ± cpy.
L	2380	2390	26	4E0	
L	2390	2415	27	4A0	

DDH V-302 (2 — 8)

Cyprus Anvil Mining Corp.

Lithologic Log

Logged By: _____

Code	From	To	Unit	Code	Description
1	10 14	16 20	22 23	25 27	
L	2415	2465	28	4C9	8 60% 4C, 40% 4E, locally calcareous.
L	2465	2515	29	4D8	
L	2515	2585	30	4E1	minor magnetite.
L	2585	2690	31	4C0	98 locally grades to 4E8 where pyrite decreases, cpy increases.
L	2690	2730	32	4E1	locally 4C0 as above.
L	2730	2980	33	4C8	9 as in unit 31, minor po in more massive intervals.
L	2980	3034	34	4C0	8
L	3034	3085	35	4E0	massive shitty pyrite.
L	3085	3180	36		fault gouge - 308.5-318. 2.7' REC.
L	3180	3248	37	4L3	
L	3248	3637	38	4L0	4L7, 4L6 overall chlor ± musc.
					last 10' interval chlor increasing.
L					minor calcareous interval 324.8-363.7
L	3637	3730	39	5B6	could easily be 4L6
L	3730	4003	40	4L6	7 locally grades to 4L3 no abundant cpy observed.
L	4003	4018	41	5D3	zebra stripped
L	4018	4058	42	4L6	7
L	4058	4068	43	5P0	zebra
L	4068	4089	44	0Q0	
L	4089	4136	45	5D0	+ 0Q0
L	4136	4392	46	4L6	7 as in unit 42, locally grades to 4L3
L	4392	4410	47		fault gouge.
L	4410	4434	48	5D3	1Q0
L	4434	4810	49	4L7	1 no MAJOR ABUNDANCE OF CPY OBSERVED
					minor amounts observed throughout
					typical 4L7 chlor ± musc.
L	4810	5230	50	4L3	7 very locally grades to 4L67
					minor carbonate veins 486.5-488.0
					minor chalco observed throughout.
					cross-cutting fracture veinlets observed dominantly po-bhic - cpy occurs usually in these "veinlets" - suggestion of further removed from the source of Cu.

DDH V-302 (2 — 8)

Cyprus Anvil Mining Corp.
Lithologic Log

Logged By: JWM

Code	From	To	Unit	Code	Description
1	10 — 14	16 — 20	22 23	25 — 27	
L	5230	52965	51	4L6	
L	52965	53300	52	4L3	As in unit 50
L	53300	54100	53	4EH	19/ minor 4A / tectonic fragments of 4L? throughout - % of sulfides increasing in 4L - becoming more massive. 0.1% cpy?
L	54100	55103	54	4A0	Pb+Zn = LON
L	55103	55244	55	4L37	
L	55244	56133	56	9A10	slightly calcareous throughout, slight improvement in grade
L	56133	60100	57	5A0	/5A9 very minor sulfides po, py
L	60100	61654	58	5A0	/5A9 increase in carbonates.
L	61654	62000	59	5B0	604-612
		EOH			EOH calcareous - calc-L.
	EOH				

DDH V-302 (2 — 8)

Cyprus Anvil Mining Corp.

Structural Log

Logged By: JWM

Code	From	To	Feature	Sym	S_1 Dip Direct.	S_2 Dip Direct.	Description
1	10 — 14	16 — 20	22 — 24	26	28 — 32	34 — 38	
S		1435	PSZ			48 220	
S		1550				62 220	
S		1760				61 220	
S		1940				65 220	1375-308.5 - No Symmetry
S		2040				63 220	determinations - massive sulfides.
S		2180				64 220	
S		2460				60 220	
S		2830				55 220	
S		3000				70 220	
S		3280	PSZ			75 220	320 — S region.
S		3380	PSZ	S		67 220	
S		3480	PSZ	M		80 220	
S		3590		R		70 220	abundant QBQ, ea No symm.
							contorted S_2
S		3780	PSZ			85 220	
S		3880	PSZ			80 220	
S		3980	PSZ	S		90 220	Very few symm determinations
							because of ① PSZ dominant ②
							S_2 ≠ 90° C.A. ③ abundant QBQ
S		4030	PSZ	Z		80 220	this region based on only two
							symm. determinations.
S		4140	PSZ			70° 220	
S		4280	PSZ			72 220	
S		4310	PSZ	S			
S		4420	PSZ	Z		75 220	Gouge Fault zone 439.2-441.0
S		4510	PSZ			80 220	
S		4650	PSZ	S		80 220	
S		4840	PSZ	R			S2 90° to C.A. No symm.
S		4970	PSZ			85 220	
S		5120	PSZ			75 220	
S		5220	PSZ			60 220	
S		53A0	PSZ	S		75 220	
S		5490	PSZ	Z		80 220	
S		5620	PSZ			67 220	
S		5750	PSZ	M		80 220	
S		5813	PSZ	S		85 220	

DDH V-302 (2 — 8)

Cyprus Anvil Mining Corp.
Structural Log

Logged By: _____

Code	From	To	Feature	Sym	S_1 Dip Direct.	S_2 Dip Direct.	Description
1	10 — 14	16 — 20	22 — 24	26	28 — 32	34 — 38	
S		15850	PSZ			85 220	
S		59?0	PSZ	Z		65 220	
S		16070	PSZ			58 220	
S		16200	PSZ	S		65 220	
							EOH

DDH V-302 (2 8)

Cyprus Anvil Mining Corp.

Geochemical Log (Sampler's Copy)

Logged By: WM

Sampled By:

Code	From	To	Sample No.	Description		
1	10 14	16 20	22 27	REC	UNIT	LENGTH
P	1375	1425	V 107165	5.0	4HE/4GO	5.0
P	1425	1465	V 17166	4.0	4G/4E/4D	4.0
P	1465	1520	V 17167	4.8	4G/4E	5.5
P	1520	1570	V 17168	5.0	4E/L	5.0
P	1570	1619	V 107169	4.9	4E/4G	4.9
P	1619	1664	V 17170	4.5	4E8	4.5
P	1664	1727	V 17171	6.3	14E6	6.3
P	1727	1760	V 17172	3.3	4E4	3.3
P	1760	1810	V 107173	4.8	4G8	5.0
P	1810	1860	V 17174	5.6	4KO	5.0
P	1860	1910	V 17175	5.0	4KO	5.0
P	1910	1960	V 17176	5.0	4KO	5.0
P	1960	2006	V 107177	4.6	4KO	4.6
P	2006	2021	V 17178	1.5	4JO	1.5
P	2021	2060	V 17179	3.9	4KO	3.9
P	2060	2113	V 17180	5.3	4EK	5.3
P	2113	2153	V 17181	4.0	4G8/4EK	4.0
P	2153	2198	V 17182	4.5	4EK8	4.5
P	2198	2248	V 17183	5.0	4CO	5.0
P	2248	2290	V 17184	4.2	4CO/4GO	4.2
P	2290	2340	V 17185	5.0	4CO	5.0
P	2340	2390	V 17186	5.0	4C/E	5.0
P	2390	2440	V 107187	5.0	4H/4C9	5.0
P	2440	2490	V 17188	5.0	4C/4D	5.0
P	2490	2540	V 17189	5.0	4E1	5.0
P	2540	2585	V 17190	4.5	4E1	4.5
P	2585	2635	V 17191	5.0	4CO	5.0
P	2635	2690	V 107192	5.5	4CO	5.5
P	2690	2730	V 17193	4.0	4E1	4.0
P	2730	2780	V 17194	5.0	4C8	5.0
P	2780	2830	V 17195	5.0	4C8	5.0
P	2830	2880	V 17196	5.0	4C8	5.0
P	2880	2930	V 107197	5.0	4C8	5.0
P	2930	2980	V 17198	5.0	4C89	5.0
P	2980	3034	V 17199	5.4	4CO8	5.4

DDH V-302 (2 8)

Cyprus Anvil Mining Corp.

Geochemical Log (Sampler's Copy)

Logged By: _____

Sampled By: _____

Code	From	To	Sample No.	Description		
1	10 14	16 20	22 27	REC	UNIT	LENGTH
P	31034	31085	V 10801	5.1	4EO	51
P	15330	15410	V 18011	7.0	4EH	7.0
P	15410	15450	V 18012	5.0	4AO	50
P	15450	15503	V 18013	5.0	4AO	53
P	15524	15574	V 18014	3.0	4AO	50
P	15574	56V3	V 18015	3.4	4AO	3.9
P						
						5535-5620
						6.0' Rec.

CYPRUS ANVIL MINING CORPORATION

DIAMOND DRILL CORE LOG

Hole Number: V-303

Project: VANGORDA

Location: VANGORDA PLATEAU

Claim: _____

Terr. Plane Co-ords.: _____ N

_____ E

Grid Co-ords.: _____

_____

Elevation: _____

Fabric Orientation Diagram:

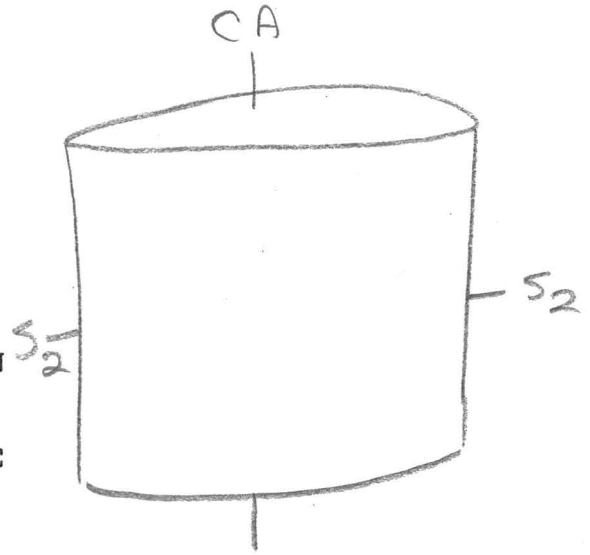

All symmetry determinations looking NW with S_2 dipping SW with dip azimuth 220.

Total Depth: 425.0

Purpose: _____

Logged by: D.J.H. Date(s) Logged: _____

Drilling Contractor: A.D.D.

Core:	Size	From	To	Collar Cased and Capped:

Started: _____ Completed: _____

Cyprus Anvil Mining Corp.
Diamond Drill Core Log

DDH V-303
2 8

Code	Drillhole	Elevation	Northing	Easting	Comments
1	2 8	10 16	17 24	25 32	34 48
T	V-303	11536.86	9032751.8	5941161.7	FEET

Code	Drillhole	Depth	Zenith Angle	True Azimuth	Comments
1	2 8	10 14	22 26	28 32	34 56
R	V-303	0 0	180.0	.	AT COLLAR
R	V-303	1090	178.0	38.0	
R	V-303	2090	177.5	36.0	
R	V-303	3090	175.7	90.0	AVG DEVIATION = 176° @ 348'
R	V-303	4250	172.0	77.0	AVG DEVIATION = 174° @ 421'
R		.	.	.	
R		.	.	.	
R		.	.	.	
R		.	.	.	
R		.	.	.	
R		.	.	.	
R		.	.	.	
R		.	.	.	
R		.	.	.	
R		.	.	.	
R		.	.	.	

Code	Drillhole	Comments, Errant Remarks, Snivellings and/or Lewd Suggestions
1	2 8	10 47

DDH V-303 (2 — 8)

Cyprus Anvil Mining Corp.
Lithologic Log

Logged By: DJH.

Code	From	To	Unit	Code	Description
1	10 14	16 20	22 23	25 27	
L	1 1 10 0	1 1930	1/	#1	tricored - n/c
L	1 1930	1 1944	12	5B16	
L	1 1944	1 1980	13	4A17	w/ 10% patchy & SI2 foliaform PO ;
	1 1 1	1 1 1	1	1 1	minor 4HO & 4DO interbanded
L	1 1980	1 1990	14	4G10	w/ ~15% BaSO4
L	1 1990	1/101/6	15	4A10	minor base metal values
L	1/101/6	1/1030	16	4D10	
L	1/1030	1/1053	17	4F14	→ 4F46 ; fine grained "buckshot"
L	1/1053	1/1077	18	4C10	
L	1/1077	1/1092	19	4G14	
L	1/1092	1/1162	10	4A14	
L	1/1162	1/1172	11	4D10	
L	1/1172	1/1187	12	4G10	
L	1/1187	1/1208	13	4D10	w/ 20% interbanded grey metatuff? ;
	1 1 1	1 1 1	1	1 1	20% brecciated QQO w/ massive
	1 1 1	1 1 1	1	1 1	sph. infillings.
L	1/1208	1/1230	14	4A10	4A4?
L	1/1230	1/1240	15	4L13	no sdes ; gouge
L	1/1240	1/1320	16	4A10	>5% Pb+Zn.
L	1/1320	1/1339	17	4D10	
L	1/1339	1/1357	18	4E11	- minor Pb+Zn rich bands
L	1/1357	1/1368	19	4D10	
L	1/1368	1/1455	20	4A4	
L	1/1455	1/1467	21	4E10	
L	1/1467	1/1487	22	4G4	w/ minor 4H
L	1/1487	1/1493	23	5D13	
L	1/1493	1/15188	24	4GJ	60:40 4J4/4J487 : 4G4 ; minor
	1 1 1	1 1 1	1	1 1	4E4
L	1/15188	1/1622	25	4C10	→ 4C7 locally.
L	1/1622	1/1653	26	5A1	v. minor sdes
L	1/1653	1/1697	27	4B1D	50:50 interbanded 4B0/4 : 4DO
L	1/1697	1/1743	28	4C12	→ 4C279
L	1/1743	1/181 3	29	4EH	50:50 interbanded 4E2 : 4HO
L	1/181 3	1/1847	30	4C12	→ 4C279
L	1/1847	1/1883	31	4E7	
L	1/1883	21/25	32	4C8	→ 4C879

DDH V-303

Cyprus Anvil Mining Corp.

Lithologic Log

Logged By: DJH

Code	From	To	Unit	Code	Description
1	10 14	16 20	22 23	25 27	
L	12125	12670	33	4C17	→ 4C79; chpy decreasing down int.
L	12670	12780	34	4L16	→ 4L67
L	12780	12810	35	5D13	
L	12810	12954	36	4L16	→ 4L67; minor po
L	12954	13104	37	5B17	→ 5B76; no sdes
L	13104	13180	38	5B10	
L	13180	13615	39	5B17	→ 5B76; no sdes; gouge 347-361.5
L	13615	13614	40	4E11	→ 4E18
L	13614	13712	41	4L12	
L	13712	13818	42	5B17	→ 5B76; minor S2 foliaform py
L	13818	14250	43	5B17	→ 5B76
		EOH			

DDH V-303 (2 / 8)

Cyprus Anvil Mining Corp.
Structural Log

Logged By: DJH

Code	From	To	Feature	Sym	S_1 Dip Direct.	S_2 Dip Direct.	Description
	10 14	16 20	22 24	26	28 32	34 38	
S		1940	CS12			715 220	Z sym 93.0 - 112.6
S		11126	F123			618 220	S sym 112.6 - 145.7
S		11320	CS12			618 220	
S		11457	F12S				R region 145.7 - 162.0
S		11520	PS12			615 220	- comp. layering
S		11620	F12R				S sym 162.0 - 170.0
S		11700	F12S			716 220	R region 170.0 - 201.0
S		11900	PS12			815 220	- comp layering
S		12101 0	F12R			715 220	S-sym 201.0 - 223.0
S		12230	F12S			710 220	M-sym 223.0 - 253.0
S		12410	CS12			613 220	(E region)
S		12530	F12M				Z sym 253.0 - 274.0
S		12740	F123			717 220	S sym 274.0 - 302.0
S		12940	CS12			718 220	
S		13020	F12S				D.D. region 302.0 - 316.0
S		13160	F12D			813 220	S sym 316.0 - 330.0
S		13300	F12S			619 220	Z sym 330.0 - 347.0
S		13470	F127			617 220	Breccia & Gouge 347.0 - 362.0
							- no sym - no SZ measured
S		13620	CS12			712 220	S sym 362.0 - 373.0
S		13730	F12S				D.D. region 373.0 - 384.0
S		13840	F12D			611 220	Z sym 384.0 - 400.5
S		14005	F123			713 220	S sym 400.5 - EOH.
S		14200	CS12			619 220	
		1E0114					

DDH V-303 (2 … 8)

Cyprus Anvil Mining Corp.

Geochemical Log (Sampler's Copy)

Logged By: DJH

Sampled By:

Code	From	To	Sample No.	Description		
1	10 14	16 20	22 27	LENGTH	UNIT	REC
P	944	980	676	3.6	4A7	3.6
P	980	1016	677	3.6	4AG	3.6
P	1016	1053	678	3.7	4FD	3.7
P	1053	1077	679	2.4	4CO	2.4
P	1077	1120	680	4.3	4GA	3.0
P	1120	1162	681	4.2	4A4	3.5
P	1162	1208	682	4.6	4DG	4.6
P	1208	1240	683	3.2	4AL	3.2
P	1240	1280	684	4.0	4AO	4.0
P	1280	1320	685	4.0	4AO	4.0
P	1320	1368	686	4.8	4DE	4.8
P	1368	1408	687	4.0	4A4	4.0
P	1408	1455	688	4.7	4A4	4.7
P	1455	1493	689	3.8	4GE/5D	3.8
P	1493	1533	690	4.0	4GJ	4.0
P	1533	1588	691	5.5	4GJ	5.5
P	1588	1622	692	3.4	4CO	3.4
P	1622	1653	693	3.1	5A1	3.1
P	1653	1697	694	4.4	4BD	4.4
P	1697	1743	695	4.6	4C2	4.6
P	1743	1813	696	7.0	4EH	7.0
P	1813	1847	697	3.4	4C2	3.4
P	1847	1883	698	3.6	4E7	3.6
P	1883	1933	699	5.0	4C8	5.0
P	1933	1983	700	5.0	4C8	5.0
P	1983	2033	751	5.0	4C8	5.0
P	2033	2083	752	5.0	4C8	5.0
P	2083	2125	753	4.2	4C8	4.2
P	2125	2175	754	5.0	4C7	5.0
P	2175	2225	755	5.0	4C7	5.0
P	2225	2275	756	5.0	4C7	5.0
P	2275	2325	757	5.0	4C7	5.0
P	2325	2375	758	5.0	4C7	5.0
P	2375	2425	759	5.0	4C7	5.0
P	2425	2475	760	5.0	4C7	5.0

DDH V-303 (2 / 8)

Cyprus Anvil Mining Corp.

Geochemical Log (Sampler's Copy)

Logged By: DJH.

Sampled By:

Code	From	To	Sample No.	Description		
1	10 14	16 20	22 27	LENGTH	UNIT	REC.
P	12475	12525	7611	5.0	4C7	5.0
P	12525	12575	7612	5.0	4C7	5.0
P	12575	12625	7613	5.0	4C7	5.0
P	12625	12670	7614	4.5	4C7	4.5

CYPRUS ANVIL MINING CORPORATION

DIAMOND DRILL CORE LOG

Hole Number: V-317

Project: VANGORDA

Location: VANGORDA PLATEAU

Claim: _____

Terr. Plane Co-ords.: _____ N

_____ E

Grid Co-ords.: _____

_____

Elevation: _____

Fabric Orientation Diagram:

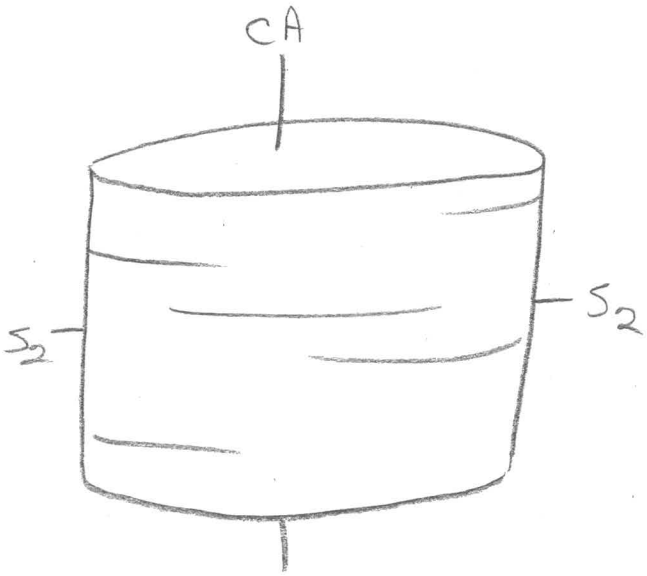

All symmetry determinations looking NW with S_2 dipping SW with dip azimuth 220.

Total Depth: 368.0

Purpose: _____

Logged by: DJH Date(s) Logged: _____

Drilling Contractor: A.DD. Core: Size From To Collar Cased and Capped: ____

_____ _____ _____

_____ _____ _____

_____ _____ _____

Started: _____ Completed: _____

Cyprus Anvil Mining Corp.

Diamond Drill Core Log

DDH V-317 (2–8)

Code	Drillhole	Elevation	Northing	Easting	Comments
	2 – 8	10 – 16	17 – 24	25 – 32	34 – 48
T	V-317	11154.46	9033161.5	5941710.4	FEET

Code	Drillhole	Depth	Zenith Angle	True Azimuth	Comments
	2 – 8	10 – 14	22 – 26	28 – 32	34 – 56
R	V-317	0 0	180.0	0163.0	AT COLLAR
R	V-317	1570	179.0	0163.0	ACID ZEMITH
R			.	.	
R			.	.	NO SINGLE SHOT SURVEY
R			.	.	HOLE LOST DUE TO CAVE
R			.	.	
R			.	.	
R			.	.	
R			.	.	
R			.	.	
R			.	.	
R			.	.	
R			.	.	
R			.	.	
R			.	.	
R			.	.	

Code	Drillhole	Comments, Errant Remarks, Snivellings and /or Lewd Suggestions
	2 – 8	10 – 47

DDH V-317

Cyprus Anvil Mining Corp.

Lithologic Log

Logged By: DJH.

Code	From	To	Unit	Code	Description
1	10 14	16 20	22 23	25 27	
L	1100	1690	11	#1	tricored - no core
L	1690	1710	12	4K11	oxidized
L	1710	1726	13	4K11	- grad. lower ct.
L	1726	1870	14	4A10	→ 5A19 locally; ± reddish sph (1-2% Zn)
					v. minor 5D3 bands; ~5% tot. sdes
L	1870	1915	15	4A14	
L	1915	1981	16	4A10	→ 4AC locally; ~50% tot. sdes mainly py
					; minor 4A4 bands.
L	1981	12100	17	4A14	w/ base metal content decreasing toward
					end of int.
L	12100	12106	18	5D13	
L	12106	12116	19	4A14	
L	12116	12127	110	5D13	
L	12127	14165	11	4A10	→ 4AC locally w/ minor Pb+Zn except
					over first few feet of int.
L	14165	14174	12	5D13	
L	14174	16106	13	4C13	w/ ~60% py; → 4E1 locally; ~10% 4A0
L	16106	16143	14	5D13	
L	16143	16160	15	4E11	
L	16160	18334	16	4A10	→ 4AC locally; 15-25% py
L	18334	19170	17	4C13	as unit 13 w/ minor 5D3
L	19170	19192	18	4E11	
L	19192	21018	19	4A10	as units 11 & 16
L	21018	21120	210	5A10	w/ 30% interbanded 4L1
L	21120	21842	211	4L17	w/ 5-10% po; occas. weakly calc w/
					minor chpy values; minor 5D3
					throughout.
L	21842	21875	212	5D13	
L	21875	21900	213	5B16	unaltered.
L	21900	31017	214	5D13	w/ 30% 5B6
L	31017	31135	215	5B16	occas. calc.
L	31135	31178	216	5D10	
L	31178	33160	217	4L13	gouge & broken core
L	33160	33540	218	4L16	w/ minor po; gouge & broken core
L	33540	36180	219	4L16	w/ v. minor po
		EOH			* hole lost due to cave *

DDH V-317 (2 / 8)

Cyprus Anvil Mining Corp.
Structural Log

Logged By: DJH

Code	From	To	Feature	Sym	S_1 Dip Direct.	S_2 Dip Direct.	Description
1	10 14	16 20	22 24	26	28 32	34 38	
S		1690	IF12	S			O/B 0-69'
S		1760	IF12	E		8102210	S region 69'-76'
S		1860	CIS12			6172210	Z region 76'-147.3'
S		1980	CIS12			6152210	
S		11070	CIS12			6172210	
S		11170	CIS12			7162210	
S		11270	CIS12			7142210	
S		11360	CIS12			7152210	
S		11473	IF12	Z		6152210	R region 147.3-166
S		11570	PIS12			7192210	
S		11660	IF12	R		6192210	Z region 166-179.8
S		11798	IF12	Z		6172210	R region 179.8-202.0
S		11860	PIS12			7112210	
S		11970	PIS12			6152210	
S		12020	IF12	R			Z region 202.0-254.0
S		12070	CIS12			6192210	
S		12170	CIS12			6172210	
S		12270	CIS12			6132210	
S		12380	CIS12			7142210	
S		12470	CIS12			6102210	
S		12540	IF12	Z			M region 254.0-272.0
S		12560	CIS12			7182210	(steep S1 ?)
S		12670	CIS12			6132210	
S		12720	IF12	M			Z region 272.0-282.0
S		12770	CIS12			7162210	
S		12820	IF12	Z			D.D. region 282.0-296.0
S		12870	CIS12			6152210	
S		12960	IF12	D		6132210	S region 296.0-303.7
S		13037	IF12	E			Z region 303.7-311
S		13070	CIS12			6132210	
S		13110	IF12	3			S region 311-317.5
S		13175	IF12	S		7002210	
S		13290	CIS12			2102210	Gouge & heavily broken core
S		13380	CIS12			2142210	w/ some vertical S2
S		13500	CIS12			2172210	317.5-354 (no sym
S		13540	IF12	Z			determinations)

DDH V-317 (2 / 8)

Cyprus Anvil Mining Corp.
Structural Log

Logged By: D.J.H.

Code	From	To	Feature	Sym	S_1 Dip Direct.	S_2 Dip Direct.	Description
1	10 14	16 20	22 24	26	28 32	34 38	
S		13610	F2	3		810 220	Z region 354-360
S		13680	F2	S			S region 360-368
		EOH					

DDH V-317

Cyprus Anvil Mining Corp.

Geochemical Log (Sampler's Copy)

Logged By: DJH

Sampled By:

Code	From	To	Sample No.	Description			
1	10 14	16 20	22 27	UNIT	LENGTH	REC.	
P	1 1726	1 1770	1 1/14918	4AO	4.4	4.4	
P	1 1770	1 1820	1 1/14919	4AO	5.0	5.0	
P	1 1820	1 1870	1 1/15010	4AO	5.0	5.0	
P	1 1870	1 1915	1 31901	4A4	4.5	4.5	
P	1 1915	1 1981	1 31010 12	4AO	6.6	6.6	
P	1 1981	1/1030	1 31010 13	4A4	4.9	4.9	
P	1/1030	1/1080	1 31010 14	4A4	5.0	5.0	
P	1/1080	1/1130	1 31010 15	4A4	5.0	5.0	
P	1/1130	1/1180	1 31010 16	4A4	5.0	5.0	
P	1/1180	1/1227	1 31010 17	4A4/5D3	4.7	4.7	
P	1/1227	1/1280	1 31010 18	4AO	5.3	5.3	
P	1/1280	1/1330	1 31010 19	4AO	5.0	5.0	
P	1/1330	1/1380	1 31011 10	4AO	5.0	5.0	
P	1/1380	1/1430	1 31011 11	4AO	5.0	5.0	
P	1/1430	1/1474	1 31011 12	4AO/5D3	4.4	4.4	
P	1/1474	1/1530	1 31011 13	4C3	5.6	5.6	
P	1/1530	1/1580	1 31011 14	4C3	5.0	5.0	
P	1/1580	1/1606	1 31011 15	4C3	2.6	2.6	
P	1/1606	1/1643	1 31011 16	5D3	3.7	3.7	
P	1/1643	1/1690	1 31011 17	4EI/4AO	4.7	4.7	
P	1/1690	1/1740	1 31011 18	4AO	5.0	5.0	
P	1/1740	1/1790	1 31011 19	4AO	5.0	5.0	
P	1/1790	1/1834	1 31012 10	4AO	4.4	4.4	
P	1/1834	1/1880	1 31012 11	4C3	4.6	4.6	
P	1/1880	1/1930	1 31012 12	4C3	5.0	5.0	
P	1/1930	1/1970	1 31012 13	4C3	4.0	4.0	
P	1/1970	12018	1 31012 14	4EI/4AO	4.8	4.8	
P	12112 0	12117 0	1 31012 15	4L7	5.0	5.0	assay for Cu, Au only
P	12117 0	12212 0	1 31012 16	4L7	5.0	5.0	
P	12212 0	12217 0	1 31012 17	4L7	5.0	5.0	
P	12217 0	12312 0	1 31012 18	4L7	5.0	5.0	
P	12312 0	12317 0	1 31012 19	4L7	5.0	5.0	
P	12317 0	12412 0	1 39930	4L7	5.0	5.0	
P	12412 0	12417 0	1 39931	4L7	5.0	50	
P	12417 0	12520	1 30032	4L7	5.0	5.0	

DDH V-317

Cyprus Anvil Mining Corp.
Geochemical Log (Sampler's Copy)

Logged By: _____

Sampled By: _____

Code	From	To	Sample No.	Description
1	10 14	16 20	22 27	UNIT LENGTH REC
P	12512 0	12517 0	130313	4L7 5.0
P	12517 0	12162 0	130314	4L7 5.0
P	12162 0	12617 0	130315	4L7 5.0
P	12617 0	12720 0	130316	4L7 5.0
P	12720 0	12718 0	130317	4L7 6.0
P	12718 0	12840 0	130318	4L7 6.0

assay for Cu, Au only.

289

CYPRUS ANVIL MINING CORPORATION

DIAMOND DRILL CORE LOG

Hole Number: V-320

Project: VANGORDA

Location: VANGORDA PLATEAU

Claim: _____

Terr. Plane Co-ords.: _____ N

_____ E

Grid Co-ords.: _____

_____

Elevation: _____

Fabric Orientation Diagram:

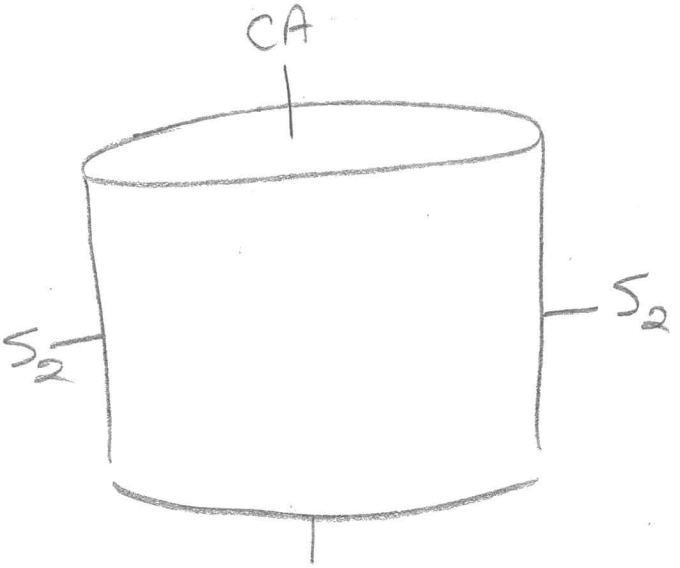

All symmetry determinations looking

NW with S_2 dipping

SW with dip azimuth 220.

Total Depth: 487.0

Purpose: _____

Logged by: JWM Date(s) Logged: _____

Drilling Contractor: A.D.D.

Core:

Size	From	To

Collar Cased and Capped: _____

Started: _____ Completed: _____

Cyprus Anvil Mining Corp.

Diamond Drill Core Log

DDH V-320

Code	Drillhole	Elevation	Northing	Easting	Comments
1	2 8	10 16	17 24	25 32	34 48
T	V-320	11511.54	9032011.10	5940211.6	FEET

Code	Drillhole	Depth	Zenith Angle	True Azimuth	Comments
1	2 8	10 14	22 26	28 32	34 56
R	V-320	00	180.0	.	AT COLLAR
R	V-320	1670	177.2	048.0	ACID ZEN = 179° @ 185'
R	V-320	2670	178.0	048.0	
R	V-320	3670	178.3	123.0	ACID ZEN = 179° @ 377'
R	V-320	4670	176.5	278.0	
R		.	.	.	
R		.	.	.	
R		.	.	.	
R		.	.	.	
R		.	.	.	
R		.	.	.	
R		.	.	.	
R		.	.	.	
R		.	.	.	
R		.	.	.	
R		.	.	.	

Code	Drillhole	Comments, Errant Remarks, Snivellings and/or Lewd Suggestions
1	2 8	10 47

DDH V-320

Cyprus Anvil Mining Corp.

Lithologic Log

Logged By: JWM

Code	From	To	Unit	Code	Description
1	10 14	16 20	22 23	25 27	
L	100	1410 0	01	#	O/B ? according to drill reports started coring @ 134'
					NOTE: there is 15' of OD ~~in~~ above 140' with no record of where it starts i.e. log would read 0.0 - 120 O/B
					120 - 135 OD
					135 - 140 No Core
					140 — CORE
L	1410 0	1652	02	5B26	locally grading to 4L6
					transition to 4L over 5' at end of interval
L	1652	1700	03	4L10	locally grading to 5B
L	1700	17V5	04	4A10	→ 5A9
L	17V5	1756	05	4L3	
L	1756	1771	06	0900	
L	1771	1862	07	4L3	→ 4L0
L	1862	1992	08	5B26	increase of graphite over unit 02
L	1992	2002	09		graphitic gouge, // to Sz
L	2002	2032	10	5B26	As in unit 8
L	2032	2038	11		graphitic gouge as in unit 9
L	2038	2080	12	5B26	
L	2080	2186	13		graphitic gouge as in 9, 11
L	2186	2155	14	4L10	NOTE: The above 5B26 (08, 11, 12) contains numerous graphitic mush zones, only the larger ones have been broken out.
L	2155	2173	15	4D8	
L	2173	2250	16	4EC8	50/50
L	2250	2271	17	4K8	
L	2271	2288	18	4L0	
L	2288	2298	19	4C0	
L	2298	2308	20	4E0	
L	2308	2390	21	4688	minor variably calcareous zones at beginning of interval. Pb+Zn ≥ 10%?
L	2390	2407	22	4L4	
L	2407	2419	23	4E68	

DDH V-320 (2–8)

Cyprus Anvil Mining Corp.
Lithologic Log

Logged By: IWM

Code (1)	From (10–14)	To (16–20)	Unit (22–23)	Code (25–27)	Description
L	2419	2444	24	5B7	6
L	2444	2462	25	5C0	20% 5D within interval
L	2462	2507	26	5D6	20% interbonded 5B
L	2507	2593	27	4L6	7 "greenish grey"
L	2593	2644	28	5D0	Zebra Rk.
L	2644	2810	29	4L6	→ 5B Variably bxiated, generally
					tuffaceous appearing throughout
L	2810	2840	30	5B2	/4L 281.2 → 281.5 464
L	2840	2954	31	5B2	locally 4L, As above.
L	2954	3010	32	4L6	7
L	3010	3120	33	5D0	Variably calc, Z.Rk., locally contains fuchsite.
L	3120	3189	34	4L0	→ 4L3
L	3189	3200	35		gouge. NOTE 317'-321' 1.3' REC.
L	3200	3770	36	4L6	locally to 4L0
L	3770	3848	37	5B2	→ 5A0
L	3848	3913	38	4L6	locally tuffaceous
L	3913	3925	39	5B2	
L	3925	3945	40	4L0	
L	3945	3950	41	4D7	
L	3950	3989	42	4L0	
L	3989	4000	43	4H8	
L	4000	4025	44	4L0	
L	4025	4091	44	4A0	→ 4A4 0.3% cpy first 2-3'
L	4091	4106	45	4D7	
L	4106	4136	46	4L0	
L	4136	4150	47		gouge.
L	4150	4219	48	4L6	TUFFACEOUS APPEARING
L	4219	4246	49	4L0	Carbonaceous
L	4246	4300	50	4A0	SKUNNY GRADES
L	4300	4332	51	4E1	
L	4332	4350	52	4L0	
L	4350	4368	53	4C7	
L	4368	4400	54	4E1	→ 4C
L	4400	4407	55	4L0	
L	4407	4560	56	5A0	busted core.
L	4560	4576	57		5A gouge.

DDH V-320 (2–8)

Cyprus Anvil Mining Corp.
Lithologic Log

Logged By:

Code (1)	From (10–14)	To (16–20)	Unit (22–23)	Code (25–27)	Description
L	4576	4589	58	5A0	Breccia
L	4589	4630	59		5A gouge
L	4630	4870	60	5A0	typical 5A with thin seams
					(threads + beads of silica, very minor
					hint of sulfides)

DDH V-320 (2 . 8)

Cyprus Anvil Mining Corp.
Structural Log

Logged By: JWM

Code	From	To	Feature	Sym	S_1 Dip Direct.	S_2 Dip Direct.	Description
1	10 14	16 20	22 24	26	28 32	34 38	
S		1410	CSZ			80 2210	
S		1570	CSZ			71 2210	
S		1700	CSZ	Z		65 2210	one S symm. at 165'
							closely bracketed by Z
							one either side.
S		1840	CSZ	S		80 2210	
S		1950	PSZ	Z		78 2210	
S		2050	PSZ			73 2210	
S		2150	PSZ	R		85 2210	one S determination @ 201.0
							one Z determination @ 212.0'
S		2240	PSZ			71 2210	sulfides
S		2340				75 2210	" , one S deter. @ 234.2'
S		2540	PSZ			70 2210	
							264-274 S2 modified
							by bull qtz
S		2790	PSZ			74 2210	one S deter. at 279.0'
S		2940	PSZ			72 2210	
S		3070	PSZ			75 2210	
S		3170	PSZ			78 2210	one S deter. at 317
S		3350	PSZ			68 2210	
S		3510	PSZ			70 2210	
S		3660	PSZ			78 2210	
S		3770	PSZ			74 2210	
S		3850	PSZ			82 2210	one S det. at 385'
S		3950	PSZ			85 2210	
S		4090	PSZ	R		85 2210	NO DETERMINATIONS EXCEPT AS
S		4130	PSZ	S		74 2210	NOTED (DOMINANTLY 4L)
S		4260	PSZ	R		77 2210	4L
S		4290	PSZ	S		70 2210	sulfides
S		4510	PSZ	R		70 2210	4L + sulfides
S		4680	PSZ			80 2210	
S		4770	PSZ			60 2210	
S		4870	PSZ	S		70 2210	

DDH V-320

Cyprus Anvil Mining Corp.

Geochemical Log (Sampler's Copy)

Logged By: WM

Sampled By:

Code	From	To	Sample No.	Description		
1	10 14	16 20	22 27	UNIT	LENGTH	REC.
P	12155	12200	131061	4DE	4.5	
P	12200	12250	131062	4EC	5.0	
P	12250	12300	131063	4EKL	5.0	
P	12300	12350	131064	4G8	5.0	
P	12350	12411	131065	4GL	6.9	
P	41025	41091	131123	4AO	6.6	
P	41091	41110	131124	4D7	1.9	
P	41246	41300	131125	4AO	5.4	
P	41300	41332	131126	4E1	3.2	
P	41350	41410	131127	4C7	5.0	

CYPRUS ANVIL MINING CORPORATION

DIAMOND DRILL CORE LOG

Hole Number: V-18-R

Project: VANGORDA

Location: VANGORDA PLATEAU

Claim: _____

Terr. Plane Co-ords.: _____ N

_____ E

Grid Co-ords.: _____

_____

Elevation: _____

Total Depth: 657.0

Fabric Orientation Diagram:

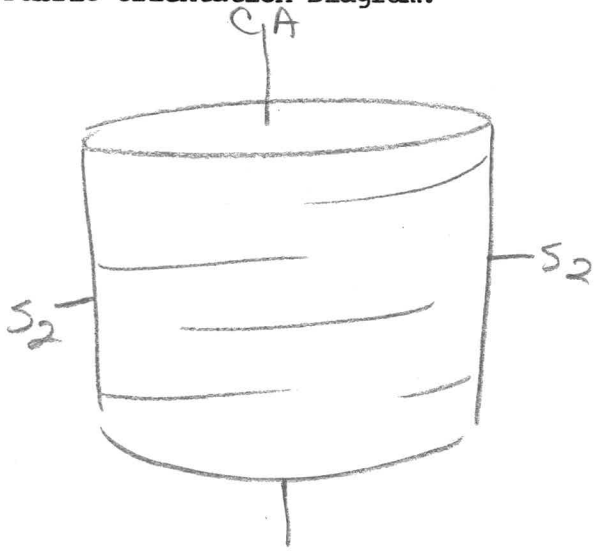

All symmetry determinations looking

NW with S2 dipping

SW with dip azimuth 220.

Purpose: _____

Logged by: JWM Date(s) Logged: _____

Drilling Contractor: A.DD

Core: Size From To Collar Cased and Capped: ____

_____ _____ _____

_____ _____ _____

_____ _____ _____

Started: _____ Completed: _____

Cyprus Anvil Mining Corp.
Diamond Drill Core Log

DDH V-18-R

Code	Drillhole	Elevation	Northing	Easting	Comments
1	2 8	10 16	17 24	25 32	34 48
T	V-18-R	11514.98	9932971.4	5941444.0	FEET

Code	Drillhole	Depth		Zenith Angle		True Azimuth	Comments
1	2 8	10	14	22	26	28 32	34 56
R	V-18-R	0	0	180.0		.	ATCOLLAR
R	V-18-R	1390	0	178.0		353.0	ACID ZEN = 179° @ 157'
R	V-18-R	4390	0	174.0		073.0	ACID ZEN = 178° @ 267'
R	V-18-R	5390	0	170.0		076.0	ACID ZEN = 178° @ 377'
R	V-18-R	6390	0	166.3		080.0	ACID ZEN = 168° @ 505'
R				.		.	
R				.		.	
R				.		.	
R				.		.	
R				.		.	
R				.		.	
R				.		.	
R				.		.	
R				.		.	
R				.		.	
R				.		.	

Code	Drillhole	Comments, Errant Remarks, Snivellings and /or Lewd Suggestions
1	2 8	10 47

DDH V-18-R (2 8)

Cyprus Anvil Mining Corp.
Lithologic Log

Logged By: JWM

Code	From	To	Unit	Code	Description
1	10 14	16 20	22 23	25 27	
L	1100	1768	01		TRICONED
L	1768	1796	02	9C10	prob. boulder in overburden.
L	1796	1967	03	5B16	
L	1967	2102	04	4L10	
L	2102	2105	95	4A10	
L	2105	2107	96	4EA	
L	2107	2109	07	4E10	
L	2109	2112	08	4E16	
L	2112	2135	09	4C10	→ 4C8, locally contains foliaform magnetite, locally copper mod ≥ 0.5%
					locally to 9E1
L	2135	2179	10	9C18	as in unit 09, increase in magnetite over unit 9
L	2179	2186	11	4C9D	slight increase in base metals.
L	2186	2190	12	4L14	possibly some 5D
L	2190	2192	13	4C18	
L	2192	2193	14	4L16	→ 5D3
L	2193	2212	15	4C18	As in unit ~~unit~~ 10, increase in cpy over previous units
					3 samples for cpy, outlisted slabs
					1. 212'
					2. 218'
					3. 220'
					locally to 4L14
L	2212	2310	16	5D10	34
L	2310	2332	17	4C18	locally to 4L
L	2332	2347	18	5D10	34 as in unit 16
L	2347	2370	19	9C18	locally to 4L
L	2370	2400	20	5D3	as in unit 16+18
L	2400	2510	21	4L14	→ 4C07
L	2510	2720	22	4L3	4/4L43
L	2720	2912	23	5D3	very calc., as in unit 16, 18+20
					locally to 4L
L	2912	2935	24	4L10	calc. altered 5D
L	2935	2970	25	5D3	as in unit 23
L	2970	3038	26	4L6	calcareous

DDH V-18-R (2 8)

Cyprus Anvil Mining Corp.
Lithologic Log

Logged By: JWM

Code	From	To	Unit	Code	Description
1	10 14	16 20	22 23	25 27	
L	13038	13050	27	5D10	3 ZRK possibly SC
L	13050	13063	28	9Q10	
L	13063	13300	29	5B17	→ locally to 5D, calcareous
L	13300	13403	30	4L10	Variably calcareous, throughout
L	13403	13590	31	4L10	
L	13590	13674	32	4L13	
L	13674	13770	33	4L10	Fault gouge 367-377' 1' rec.
					prob. not a fault zone (T.W.L.)
L	13770	14624	34	4L16	Variably calcareous- very minor
					1 sample at.
L	14624	14674	35	0DD	
L	14674	14885	36	4L17	9 increase in po. over unit 34
L	14885	14940	37	4L13	
L	14940	14950	38	4L13	Fault gouge
L	14950	15110	39	4L13	→4L0
L	15110	15125	40	4L17	9 as in unit 36
L	15125	15251	41	4L10	
L	15251	15278	42	4A10	(5A9)
L	15278	15443	43	4L10	73
L	15443	15813	44	4L17	7 Variably carbonaceous.
L	15813	15825	45	4L13	
L	15825	15940	46	4L10	1
L	15940	16085	47	4L13	
L	16080	16244	48	4L16	
L	16244	16290	49	4L13	
L	16290	16430	50	4L10	
L	16430	16570	51	4L13	- 2.2' Breccia at EOH
					Hole Stopped in 4L3
	EOH				

DDH V-18-R (2 / 8)

Cyprus Anvil Mining Corp.
Structural Log

Logged By: IWM

Code	From	To	Feature	Sym	S_1 Dip Direct.	S_2 Dip Direct.	Description
1	10 14	16 20	22 24	26	28 32	34 38	
S		1637 0	PS 2			615 2210	
S		1647 0	PS 2	P		617 2210	P 591-647

DDH V-18-R (2 8)

Cyprus Anvil Mining Corp.
Structural Log

Logged By: JWM

Code	From	To	Feature	Sym	S_1 Dip Direct.	S_2 Dip Direct.	Description
1	10 14	16 20	22 24	26	28 32	34 38	
S		8860	CS2			616 2210	
S		945	CS2	M		710 2120	mixed region 79.6 - 94.5
S		10160	CS2	S		710 2210	S region 94.5 - 106.0
S		11270	CS2			715 2210	
S		11390	S2			715 2210	
S		11570	S2			615 2210	
S		11870	S2			618 2210	
S		12380	S2			714 2210	
S		12520	S2	R		615 2210	Sulfides + 4L 106 - 252'
S		12620	CS2	M		712 2210	Mixed region 252.0 - 262.0
S		12720	CS2	Z		716 2210	Z region 262.0 - 272.0
S		12830	CS2	P		810 2120	Possibly M region 272.0 - 283
S		12920	CS2	Z		710 2210	Z region 283.0 - 292.0
S		13070	CS2			712 21210	
S		13160	CS2	S		615 2210	S region 292.0 - 316.0
S		13370	CS2	M		58 2210	M region 316.0 - 337.0
S		13570	PS2			716 2210	
S		13670	PS2			612 2120	
S		13880	PS2			618 2210	
S		14070	PS2			710 2210	
S		14120	PS2	P		614 2210	PS2 337.0 - 412.0
S		14220	PS2	D		710 2210	
S		14570	PS2	S		617 2210	422.0 - 457.0 S region.
S		14670	PS2			618 2210	
S		14770	PS2			610 2210	
S		14970	PS2			615 2210	
S		15050	PS2	P		710 2210	PS2 457.0 - 505.0
S		15150	PS2			618 2210	
S		15250	PS2	S		613 2210	S region 505 - 525.0
S		15410	PS2			612 2210	one Z symm. observed at 541
S		15610	PS2			710 2210	" " " " 560
S		15616	AS2			710 2210	" S " " 566'
S		15870	PS2			613 2210	
S		15970	PS2			710 2210	
S		16100	PS2			710 2210	
S		16170	PS2			618 2210	

DDH V-18-R (2 / 8)

Cyprus Anvil Mining Corp.
Geochemical Log (Sampler's Copy)

85

Logged By: JWM

Sampled By:

Code	From	To	Sample No.	Description		
1	10 14	16 20	22 27	UNIT	LENGTH	REC.
P	1102 0	1052	136517	4A0	3.2	
P	1052	1070	136518	4EA	1-8	
P	1070	1093	136519	4E0	2.3	
P	1093	1120	136610	4E6	2.7	
P	1120	1170	136611	4C0	5.0	
P	1170	1220	136612	4C0	5.0	
P	1220	1270	136613	4C0	5.0	
P	1270	1330	136614	4C0	6.0	
P	1330	1390	136615	4C0	6.0	
P	1390	1450	136616	4C8	6.0	
P	1450	1510	136617	4C8	6.0	
P	1510	1570	136618	4C8	6.0	
P	1570	1630	136619	4C8	6.0	
P	1630	1690	136710	4C8	6.0	
P	1690	1740	136711	4C8	5.0	
P	1740	1796	136712	4C8	5.6	
P	1796	1865	136713	4CD	6.9	
P	1865	1904	136714	4L4	3.9	
P	1904	1920	136715	4C8	1.6	
P	1920	1932	136716	4L6	1.2	
P	1932	1990	136717	4C8	5.8	
P	1990	2050	136718	4C8	6.0	
P	2050	2110	136719	4C8	6.0	
P	2110	2170	136810	4C8	6.0	
P	2170	2230	136811	4C8	6.0	
P	2230	2294	136812	4C8	6.4	
P	2294	2304	136813	5D04	1.0	
P	2304	2332	136814	4C8	2-8	
P	2332	2347	136815	5D04	1.5	
P	2347	2370	136816	4C8	2.3	
P	2370	2410	136817	5D3	3.0	
P	2400	2460	136818	4L4	6.0	Cu, Au Only
P	2460	2520	136819	4L4	6.0	Cu, Au Only
P	2520	2570	136910	4L3	5.0	Cu, Au Only

CYPRUS ANVIL MINING CORPORATION

DIAMOND DRILL CORE LOG

Hole Number: V-45-R

Project: VANGORDA

Location: VANGORDA PLATEAU

Claim: _____

Terr. Plane Co-ords.: _____ N

_____ E

Grid Co-ords.: _____

_____

Elevation: _____

Fabric Orientation Diagram:

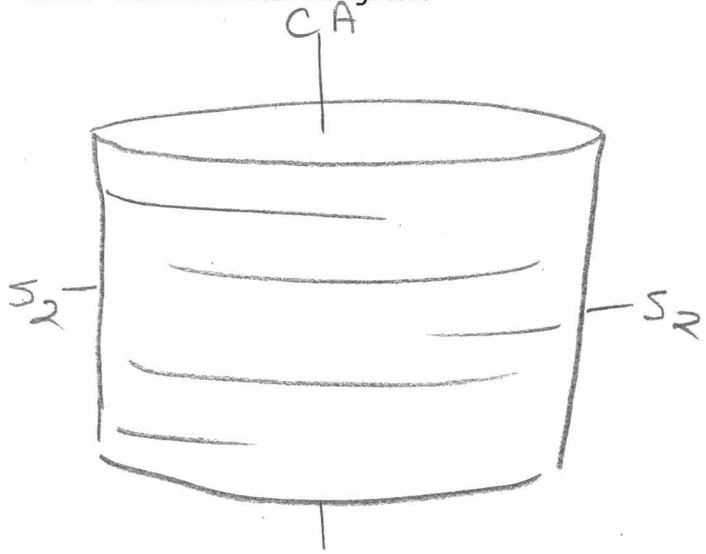

All symmetry determinations looking

NW with S2 dipping

SW with dip azimuth 220.

Total Depth: 707.0

Purpose: _____

Logged by: JWM Date(s) Logged: _____

Drilling Contractor: A.D.D.

Core: Size From To Collar Cased and Capped: ____

_____ _____ _____

_____ _____ _____

_____ _____ _____

Started: _____ Completed: _____

Cyprus Anvil Mining Corp.

Diamond Drill Core Log

DDH V1-145-R1

Code	Drillhole	Elevation	Northing	Easting	Comments
1	2 8	10 16	17 24	25 32	34 48
T	V1-145-R1	11153.36	9103256.8	594094.3	FEET

Code	Drillhole	Depth		Zenith Angle		True Azimuth		Comments
1	2 8	10	14	22	26	28	32	34 56
R	V1-145-R1	0	0	1810.0		.		ATCOLLAR
R	V1-145-R1	1819	0	1718.0		0118.0		ACID ZEN = 1179° @ 197'
R	V1-145-R1	2819	0	1717.0		0410.0		ACID ZEN = 1179° @ 357'
R	V1-145-R1	3819	0	1716.0		0618.0		
R	V1-145-R1	4819	0	1712.5		0751.0		ACID ZEN = 1177° @ 477'
R	V1-145-R1	5819	0	1711.0		0815.0		
R	V1-145-R1	6819	0	1618.0		0518.0		ACID ZEN = 1175° @ 617'
R				.		.		
R				.		.		
R				.		.		
R				.		.		
R				.		.		
R				.		.		
R				.		.		
R				.		.		
R				.		.		

Code	Drillhole	Comments, Errant Remarks, Snivellings and /or Lewd Suggestions
1	2 8	10 47

DDH V-45-R (2 8)

Cyprus Anvil Mining Corp.

Lithologic Log

Logged By: JWM

Code	From	To	Unit	Code	Description
1	10 14	16 20	22 23	25 27	
L	0000	1024	01	#1	TRICONED
L	1024	1039	02	0D10	- boulder in OB CORED
L	1039	1125	03	4G4	Fine grained, honey col. ZnS_2, minor magnetite.
L	1125	1140	04	4EL	50/50
L	1140	1334	05	4G4	8 Coarser grained than unit 3, increase of mag. as foliaform blebs localized reddish sphs.
L	1334	1351	06	5D16	
L	1351	1446	07	4G4	8 as in unit 05
L	1446	1556	08	4G8	20% interbanded 4D(4M) throughout magnetite in 4D as localized regions
L	1556	1564	09	5D10	
L	1564	1587	10	4E8	
L	1587	1602	11	4D4	good grade "breccia texture" with clasts of 4E, 4F, in a 4L matrix. cpy as seams between fragments. if sulfide content was not 50 dominant, would be logged as 4L4?
L	1602	1617	12	4E8	
L	1617	1714	13	4D4	not as base metal rich as unit 11
L	1714	1734	14	4E8	
L	1734	1749	15	4D4	As in unit 13
L	1749	1830	16	4E18	coarse, localized magnetite.
L	1830	2015	17	4C8	coarse localized magnetite, real transition from 4E - 4C
L	2015	2034	18	4A0	
L	2034	2370	19	4C8	7 as in unit 17, increasing DO massive in cpy? localized enriched zones of base metals.
L	2370	2408	20	4D10	→ 4M?
L	2408	2420	21	4J10	? Superglade facies of 4D
L	2420	2762	22	4D10	As in unit 20, 15, 13, +11 grade quite variable but overall 2-8-10% unusual texture appearing as the "4L texture" "flow facies".

DDH V-45-R (2 8)

Cyprus Anvil Mining Corp.
Lithologic Log

Logged By: JWM.

Code	From	To	Unit	Code	Description
1	10 14	16 20	22 23	25 27	
L	12716 2	12895	23	4C8	7 As in unit 21 → 4L
L	12895	12940	24	4CL	7
L	12940	13003	25	4LC	
L	13003	13020	26	4H7	
L	13020	13054	27	5B4	NOT WMLE
L	13054	13162	28	5B4	→ 4L67
L	13162	13178	29	4L1	5D
L	13178	13220	30	4L0	
L	13220	13230	31	1 1	4L gouge zone
L	13230	13434	32	4L3	7
L	13434	13550	33	4L7	
L	13550	13560	34	1 1	4L gouge
L	13560	13582	35	4L7	
L	13582	13592	36	1 1	4L gouge
L	13592	13747	37	4L3	7
L	13747	14182	38	4L0	7 increasing chlorite %
L	14182	14470	39	4L6	7
L	14470	14485	40	1 1	4L gouge
L	14485	14501	41	4L6	7
L	14501	14511	1	1 1	4L gouge
L	14511	14952	42	4L6	71
L	14952	14982	43	5D6	Z. RK
L	14982	15332	44	4L6	71
L	15332	15390	45	4L7	
L	15390	15403	46	5A9	
L	15403	15510	47	4C7	→ 4D7
L	15510	15520	48	4C0	BXA
L	15520	15580	49	4C0	BXA
L	15580	15651	50	4A4	?
L	15651	15707	51	4D5	carb
L	15707	15740	52	4E1	
L	15740	15811	53	4A0	Skunky Grade.
L	15811	15838	54	4H5	CRAP
L	15838	15950	55	4EC	
L	15950	15972	56	5A9	
L	15972	15988	57	1 1	Graphitic gouge.

DDH V-45-R (2 / 8)

Cyprus Anvil Mining Corp.
Lithologic Log

Logged By: JWM

Code	From	To	Unit	Code	Description
1	10 14	16 20	22 23	25 27	
L	159188	163110	58	5A6	→ 5A9
L	163110	164100	59	5A10	graphitic gouge possible fault zone.
L	164100	164180	60	5D6	2 Rk.
L	164180	167250	61	5D7	
L	167250	168220	62	5D6	massive 5D- f.g. sowrk
L	168220	168770	63	5D6	2 Rk.
L	168770	169330	64	5D7	
L	169330	169655	65		gouge
L	169655	170700	66	5D7	
		EOH			

DDH V-45-R (2 8)

Cyprus Anvil Mining Corp.
Structural Log

Logged By: WM

Code	From	To	Feature	Sym	S_1 Dip Direct.	S_2 Dip Direct.	Description
1	10 14	16 20	22 24	26	28 32	34 38	
S		1/10180	S2			72 210	sulfides.
S		1/1180	S2			65 210	
S		1/2160	S2			50 210	
S		1/3700	S2			58 210	
S		1/4700	S2			82 210	
S		1/5700	S2			70 210	
S		1/5900	S2	R			sulfides
S		1/7500		B			possibly not a true "breccia"
							clasts of 4L in 4E
							"rounded fragments"
S		1/8200	S2			82 210	
S		1/9700	S2			80 210	
S		2070	S2			70 210	
S		2170	S2			73 210	
S		2370	S2			75 210	
S		2500	S2			70 210	
S		2570	S2			73 210	
S		2770	S2			75 210	
S		2870	S2			80 210	
S		2970	S2	R		80 210	sulfides- 4EC, 4D, 4M + 4L
							S2 foliation not as distinct
							over this interval, foliation
							has been modified by the
							4L texture.
S		3070	S2			80 210	
S		3230	CS2	Z		68 210	more aptly showed be on
							M region
S		3370	CS2			73 210	
S		3470	CS2			80 210	
S		3570	CS2			76 210	
S		3770	CS2			75 210	
S		3870	CS2			60 220	
S		3970	CS2	S		60 210	probable S region 323-397
							323-349 more appropriately
							showed be R- ob symm.
							observed.

DDH V-45-R (2 8)

Cyprus Anvil Mining Corp.
Structural Log

Logged By: JWM

Code	From	To	Feature	Sym	S_1 Dip Direct.	S_2 Dip Direct.	Description
1	10 14	16 20	22 24	26	28 32	34 38	
S		A170	SZ			61 2210	
S		A270	SZ			60 2210	
S		A370	SZ			65 2210	
S		A470	SZ			61 2210	
S		A610	SZ	R		70 2210	usual crappy 4L - good SZ
S							but symmetry really skewed
							around.
S		A670	SZ			80 2210	
S		A750	SZ	M		70 2210	
S		A970	SZ			79 2210	
S		5070	SZ			75 2210	
S		5170	SZ			66 2210	
S		5270	SZ			66 2210	
S		5470	SZ			80 2210	
S		5670	SZ			82 2210	
S		5870	SZ			58 2210	
S		6010	SZ	R		78 2210	4L, + sulfides.
S		6070	CSZ	Z		75 2210	
S		6120	CSZ	S		75 2120	
S		6220	CSZ	Z		75 2220	
S		6470	SZ			82 2210	
S		6670	SZ			55 2120	
S		6870	SZ			60 2220	
S		7070	SZ			66 2210	

DDH 1-45-R (2 / 8)

Cyprus Anvil Mining Corp.
Geochemical Log (Sampler's Copy)

Logged By: JWM

Sampled By:

Code	From	To	Sample No.	Description		
1	10 14	16 20	22 27	LENGTH	UNIT	REC.
P	1103 9	1109 0	132114	5.1	4G4	5.1
P	1109 0	1114 0	132115	5.0	4GEL	4.9
P	1114 0	1119 0	132116	5.0	4G4	4.8
P	1119 0	1240	132117	5.0	4G4	4.9
P	1240	1129 0	132118	5.0	4G4	5.0
P	1129 0	1134 0	132119	5.0	4G4	5.0
P	1134 0	1139 0	132210	5.0	4G/5D	5.0
P	1139 0	1144 0	132211	5.0	4G4	4.9
P	1144 0	1149 0	132212	5.0	4G8	5.0
P	1149 0	1154 0	132213	5.0	4G8	5.0
P	1154 0	1159 0	132214	5.0	4GE/5D	5.0
P	1159 0	1164 0	132215	5.0	4ED	5.0
P	1164 0	1169 0	132216	5.0	4D4	5.0
P	1169 0	1174 0	132217	5.0	4ED	5.0
P	1174 0	1179 0	132218	5.0	4E1	5.0
P	1179 0	1184 0	132219	5.0	4E1	5.0
P	1184 0	1189 0	132220	5.0	4C8	5.0
P	1189 0	1194 0	132221	5.0	4C8	5.0
P	1194 0	1199 0	132222	5.0	4C8	5.0
P	1199 0	2004 0	132223	5.0	4CA	5.0
P	2004 0	2009 0	132224	5.0	4C8	5.0
P	2009 0	2114 0	132225	5.0	4C8	5.0
P	2114 0	2119 0	132226	5.0	4C8	4.8
P	2119 0	2224 0	132227	5.0	4C8	5.0
P	2224 0	2229 0	132228	5.0	4C8	5.0
P	2229 0	2334 0	132229	5.0	4C8	5.0
P	2334 0	2339 0	132230	5.0	4CD	5.0
P	2339 0	2444 0	132241	5.0	4D4	5.0
P	2444 0	2449 0	132242	5.0	4DO	5.0
P	2449 0	2554 0	132243	5.0	4DO	5.0
P	2554 0	2559 0	132244	5.0	4DO	5.0
P	2559 0	2664 0	132245	5.0	4DO	5.0
P	2664 0	2669 0	132246	5.0	4DO	5.0
P	2669 0	2774 0	132247	5.0	4DO	5.0
P	2774 0	2779 0	132248	5.0	4DO	5.0

DDH V-45-R (2 8)

Cyprus Anvil Mining Corp.

Geochemical Log (Sampler's Copy)

Logged By: _____

Sampled By: _____

Code	From	To	Sample No.	Description			
1	10 14	16 20	22 27	LENGTH	UNIT	REC	
P	2790	2840	31814	5.0	4C8	4.7	
P	2840	2890	31815	5.0	4C8	5.0	
P	2890	2940	31816	5.0	4CL	5.0	Cu, Au only
P	2940	3020	31817	8.0	4LC	8.0	Cu, Au, only
P	5403	5460	31818	5.7	4C7	5.7	
P	5460	5510	31819	5.0	4C0	5.0	
P	5510	5560	31910	5.0	4C0	5.0	
P	5560	5610	31911	5.0	4AC	5.0	
P	5610	5660	31912	5.0	4D5	5.0	
P	5660	5710	31913	5.0	4D5	5.0	
P	5710	5760	31914	5.0	4E1	5.0	
P	5760	5810	31915	5.0	4AE	5.0	
P	5810	5860	31916	5.0	4EH	5.0	
P	5860	5910	31917	5.0	4EC	5.0	
P	5910	5950	31918	4.0	4EC	4.0	

CYPRUS ANVIL MINING CORPORATION

DIAMOND DRILL CORE LOG

Hole Number: V-53-R

Project: VANGORDA

Location: VANGORDA PLATEAU

Claim: _____

Terr. Plane Co-ords.: _____ N

_____ E

Grid Co-ords.: _____

_____

Elevation: _____

Total Depth: 584.0

Fabric Orientation Diagram:

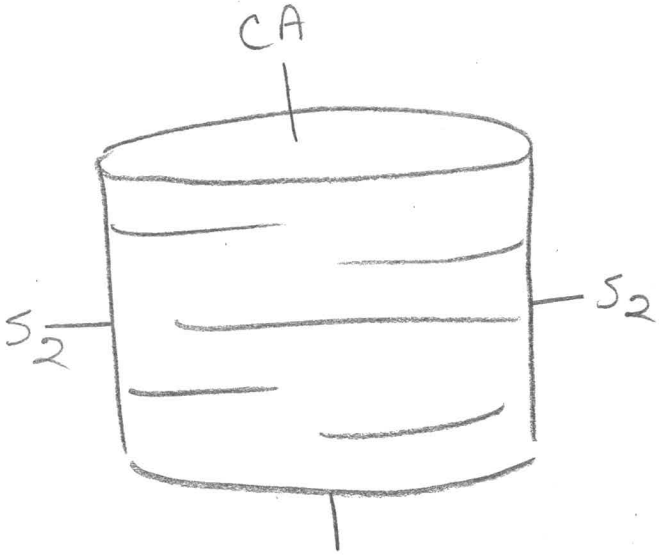

All symmetry determinations looking NW with S_2 dipping SW with dip azimuth 220.

Purpose: _____

Logged by: JWM Date(s) Logged: _____

Drilling Contractor: A.D.D.

Core: Size From To Collar Cased and Capped: ____

_____ _____ _____

_____ _____ _____

_____ _____ _____

Started: _____ Completed: _____

Cyprus Anvil Mining Corp.
Diamond Drill Core Log

DDH V-53-R

Code	Drillhole	Elevation	Northing	Easting	Comments
1	2 8	10 16	17 24	25 32	34 48
T	V1-53-R1	1152.03	9032171.9	5940464.4	FEET

Code	Drillhole	Depth	Zenith Angle	True Azimuth	Comments
1	2 8	10 14	22 26	28 32	34 56
R	V1-53-R1	0 0	180.0	.	AT COLLAR
R	V1-53-R1	1560	179.0	163.0	ACID ZEN = 179° @ 1210'
R	V1-53-R1	2560	178.5	431.0	ACID ZEN = 179° @ 337'
R	V1-53-R1	3560	178.0	443.0	ACID ZEN = 178° @ 435'
R	V1-53-R1	4560	175.0	171.0	ACID ZEN = 175° @ 515'
R	V1-53-R1	5560	174.0	181.0	ACID ZEN = 178° @ 547'
R		.	.	.	
R		.	.	.	
R		.	.	.	
R		.	.	.	
R		.	.	.	
R		.	.	.	
R		.	.	.	
R		.	.	.	
R		.	.	.	
R		.	.	.	

Code	Drillhole	Comments, Errant Remarks, Snivellings and/or Lewd Suggestions
1	2 8	10 47

DDH V-53-R (2 8)

Cyprus Anvil Mining Corp.
Lithologic Log

Logged By: JWM

Code	From	To	Unit	Code	Description
1	10 14	16 20	22 23	25 27	
L	1100	11270	01		U KNOW WHAT, NO WNAT
L	11270	11333	02	4L6	→ 4LO, possible effects of weathering.
L	11333	11371	03	5D6	5D7- tuffaceous
L	11371	11818	04	5B26	non- calcareous graphitic phyllite, localized development of chlorite- minor
L	11818	11858	05	4L10	→4L3
L	11858	11871	06	4G4	Variably calcareous
L	11871	11988	07	4L7	→ 4L37
L	11988	12101	08	0190	
L	12101	12036	09	9F06	→ 4F46, Vuggy, Weathered appearence (sandy) Fine grained
L	12036	12094	10	4L10	4F06 2050-2054'
L	12094	12110	11	4L10	/5D0 - 20% calcareous, - altered SDC?
L	12110	12470	12	5B26	locally to 4L6, as in unit 04, slightly more altered version of unit 04, possible fault gouge etc. between 236-245 as only 5' Rec.
L	12470	12476	13	4L3	
L	2476	12485	14	4J4	po, gal, sph, mag in 4L matrix
L	12485	12553	15	4L3	
L	12553	12566	16	4J4	As in unit 14, blobs of sulfides within 4L
L	12566	12670	17	4L6	Carbonaceous
L	12670	12750	18		4L Fault gouge.
L	12750	12770	19	4L0	
L	12770	12975	20	5D10	calcareous Z.RK. NOTE: Between 247.0' & 297.0' only 24.7' core Rec.
L	12975	13027	21	4L10	→4L67
L	13027	13235	22	4G0	Very minor magnetite rich seams (foliaform)
L	13235	13330	23	4L0	
L	13330	13340	24	4E10	Sandy pyrite
L	13340	13352	25	4G0	→ 4E6
L	13352	13381	26	4G0	Silica clasts mar start of interval. Calcareous throughout
L	13381	13405	27	4J16	Silica clasts throughout

DDH V-53-R (2 8)

Cyprus Anvil Mining Corp.
Lithologic Log

Logged By: JWM

Code	From	To	Unit	Code	Description
1	10 14	16 20	22 23	25 27	
L	13410 5	13411 2	28	4L10	
L	13411 2	13440	29	4L10	Fault gouge
L	13440	13473	30	4L10	
L	13473	13870	31	4L10	7- 4L67 minor to marble bands - numerous solution channels over length of interval. throughout. no appreciable increase of cpy.
L	13870	14070	32	4L46	- as in unit 31, "greener"
L	14070	14210 0	33	4L46	Various calcareous bands throughout interval - resembles 5D0 (Z·Rk) where numerous Z Rk
L	14210 0	14213	34	5D10	
L	14213	14284	35	4L46	
L	14284	14380	36	4L37	
L	14380	14465	37	4L13	→ locally to 4L37
L	14465	14530	38	4A10	
L	14530	14560	39	4L13	
L	14560	14583	40	4L13	Fault gouge
L	14583	14704	41	4A10	9
L	14704	14714	42	4EH8	in part resembles.
L	14714	14748	43	4E58	abundant silica fragments to 1-2" ∅ - notable near beginning of interval.
L	14748	14830	44	4E86	barite bearing minor silica fragments Similar to unit 43
L	14830	14900	45	4A10	→5A9
L	14900	15065	46	5A9	
L	15065	15075	47	4L74	
L	15075	15080	48	5A9	
L	15080	15093	49	4L47	
L	15093	15197	50	5A9	abundant broken core towards end of interval.
L	15197	15260	51	4E10	→4A0
L	15260	15625	52	5A9	→ locally grades to 4A0
L	15625	15880	53	5D10	→587, Similar to 4L3 overall, but lacking any Sulfides.
		EOH			

DDH V-53-R (2 / 8)

Cyprus Anvil Mining Corp.
Structural Log

Logged By: JWM

Code	From	To	Feature	Sym	S_1 Dip Direct.	S_2 Dip Direct.	Description
	10 14	16 20	22 24	26	28 32	34 38	
S		1290	CS2			83 2210	
S		1370	CS2			79 2210	
S		1510	CS2			83 2210	
S		1550	CS2	S		83 2210	S symm 1270-1550
S		1710	PS2	P		85 2210	PS2 155-171
S		1760	CS2	Z		75 2210	Z sym. 171-176
S		1810	S2			75 2210	one S sym. at 181'
S		2060	S2			70 2210	
S		2190	PS2	P		60 2210	PS2 176-219
S		2200	S2	Z		70 2210	
S		2450	PS2			70 2210	
S		2690	PS2			74 2210	
S		2870	PS2			65 2210	
S		3030	PS2	P		65 2210	PS2 229.0-303.0
S		3130	S2			42 2210	
S		3230	S2	R		60 2210	Sulfides.
S		3410		B			brecciated zone 323-341
S		3517 0	S2			75 2210	
S		3717 0	S2			60 2210	
S		3917 0	S2			55 2210	
S		4117 0	S2			70 2210	
S		4317 0	S2			75 2210	
S		4414 0	S2	R		75 2210	4L6
S		4515 0	S2			75 2210	
S		4711 0	S2	S		80 2210	449-471 S sym.
S		4815	S2	R		82 2210	Sulfides + 9A
S		4818 5		D		78 2210	Downdip region 4850-4885
S		4950	CS2	S		80 2210	
S		4970		D			
S		5211 0	PS2	P		65 2210	
S		5317 0	PS2			55 2210	
		5530	AS2			59 2210	
		5620	PS2	S		55 2210	S symm. 521-562
		5740	PS2			74 2210	
		5840	PS2	P		64 2210	PS2 562-EOH

DDH V-53-R (2 / 8)

Cyprus Anvil Mining Corp.

Geochemical Log (Sampler's Copy)

8E

Logged By: JWM

Sampled By:

Code	From	To	Sample No.	Description		
1	10 14	16 20	22 27	UNIT	LENGTH	REC.
P	11858	11871	135187	4G4	1.3	
P	12011	12036	135188	4F64	2.5	
P	12476	12485	135189	4J4	0.9	
P	12553	12566	135190	4J4	1-3	
P	12975	13027	135911	4L0	5.2	
P	13027	13070	135912	4G0	4.3	
P	13070	13120	135913	4G0	5.0	
P	13120	13170	135914	4G0	5.0	
P	13170	13235	135915	4G0	6.5	
P	13330	13380	135916	4G0	5.0	
P	13380	13405	135917	4J6	2.5	
P	13473	13530	135918	4L67	5.7	Cu, Au Only
P	13530	13590	135919	4L67	6.0	Cu, Au only
P	13590	13650	136100	4L67	6.0	Cu, Au only
P	14165	14530	136101	4A0	6.5	
P	14583	14630	136102	4A09	4.7	2.8
P	14630	14680	136103	4A09	5.0	4.9
P	14680	14730	136104	4AE8	5.0	5.0
P	14730	14780	136105	4E86	5.0	4.0
P	14780	14830	136106	4E86	5.0	5.0
P	14830	14900	136107	4A0	7.0	7.0

DDH V-12,3-R (2 / 8)

Cyprus Anvil Mining Corp.
Geochemical Log (Sampler's Copy)

Logged By: DJH

Sampled By:

Code	From	To	Sample No.	Description		
1	10 14	16 20	22 27	Rec.	Length	Unit
P	1/12 14 6	1/12 9 6	1V014815	5.0	5.0	4A0
P	1/12 9 6	1/13 1 4 6	1V014816	4.5	5.0	4A0
P	1/13 1 4 6	1/13 9 6	1V014817	4.0	5.0	4A0
P	1/13 9 6	1/14 6 8	1V014818	7.2	7.2	4A0
P	1/18 2 3	1/18 7 3	1V014819	5.0	5.0	4A7
P	1/18 7 3	1/19 2 3	1V014910	5.0	5.0	4A7
P	1/19 2 3	1/19 9 0	1V014911	6.0	6.7	4A7

CYPRUS ANVIL MINING CORPORATION

DIAMOND DRILL CORE LOG

Hole Number: V-46-R

Project: VANGORDA

Location: VANGORDA PLATEAU

Claim: _____

Terr. Plane Co-ords.: _____ N

_____ E

Grid Co-ords.: _____

_____

Elevation: _____

Fabric Orientation Diagram:

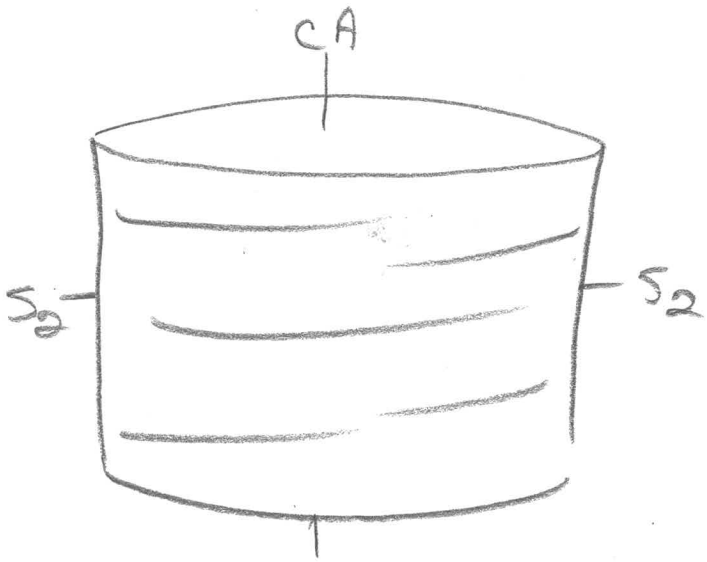

All symmetry determinations looking NW with S2 dipping SW with dip azimuth 220.

Total Depth: 587.0

Purpose: _____

Logged by: JWM Date(s) Logged: _____

Drilling Contractor: A.D.D.

Core: Size From To Collar Cased and Capped: _____

_____ _____ _____

_____ _____ _____

_____ _____ _____

Started: _____ Completed: _____

Cyprus Anvil Mining Corp.
Diamond Drill Core Log

DDH V-46-R
2 8

Code	Drillhole	Elevation	Northing	Easting	Comments
1	2 8	10 16	17 24	25 32	34 48
T	V-46-R	1157.35	903173.3	594090.3	FEET

Code	Drillhole	Depth	Zenith Angle	True Azimuth	Comments
1	2 8	10 14	22 26	28 32	34 56
R	V-46-R	0 0	180.0	.	AT COLLAR
R	V-46-R	169 0	178.0	003.0	ACID ZEN=179° @204'
R	V-46-R	269 0	177.8	301.0	ACID ZEN=178° @317'
R	V-46-R	369 0	178.4	123.0	ACID ZEN=178° @417'
R	V-46-R	469 0	178.0	172.0	ACID ZEN=176° @533'
R	V-46-R	569 0	173.0	130.0	
R			.	.	
R			.	.	
R			.	.	
R			.	.	
R			.	.	
R			.	.	
R			.	.	
R			.	.	
R			.	.	
R			.	.	

Code	Drillhole	Comments, Errant Remarks, Snivellings and /or Lewd Suggestions
1	2 8	10 47

DDH V-46-R (2 8)

Cyprus Anvil Mining Corp.
Lithologic Log

Logged By: JWM

Code	From	To	Unit	Code	Description
1	10 14	16 20	22 23	25 27	
L	1100	1250	01	#	TRICONED - NO CORE
L	1250	1370	02	4L6	→ 4L3 locally
L	1370	1460	03	4L37	
L	1460	1610	04	4L6	As in unit 2
L	1610	1720	05	4L10	50% 4L37, 50% 4L6
L	1720	1737	06	4L10	? gouge - prob. ground core.
L	1737	1827	07	4L37	
L	1827	1849	08	9910	
L	1849	1932	09	4L6	
L	1932	1942	10	4L6	? gouge - prob ground core.
L	1942	1978	11	4L6	
L	1978	2057	12	4L37	
L	2057	2089	13	4E8	→ 4H8
L	2089	2095	1A	4L3	
L	2095	2100	15	4C10	
L	2100	2139	16	4L3	
L	2139	2176	17	4KE	brecciated 4E2 in a 4K matrix
					fragments of 4E ≤ 1-3" squar.
					last .6' of interval massive 4E1
L	2176	2190	18	4L3	py blb (4E8) 218.6 - 219.0
L	2190	2215	19	4L10	/4E 50% 4L, 50% 4E
L	2215	2264	20	4E81	
L	2264	2279	21	4C10	
L	2279	2326	22	4F8	very fine grained possibly 4E depending
					on grade, variably calcareous.
L	2326	2337	23	4C1L	50% 4C(0), 50% 4L - breccia fragments 4L
L	2337	2358	24	4E18	breccia zone.
L	2358	2370	25	4G4	variably calcareous
L	2370	2380	26	4B10	dirty 4B minor cpy ∞ cross-cutting S_2 veinlets
L	2380	2385	27	4F46	
L	2385	2397	28	4E8	minor po
L	2397	2430	29	4L3	po >>> py
L	2430	2534	30	4L6	↓ green rk. po >>> py
L	2534	2538	31	4L46	? gouge core fault zone? doubt it.
L	2538	2560	32	4L6	As in unit 30
L	2560	2563	33	5D7	Zebra oniomule.

DDH V-46-R (2 8)

Cyprus Anvil Mining Corp.
Lithologic Log

Logged By: JWM

Code	From	To	Unit	Code	Description
1	10 14	16 20	22 23	25 27	
L	12563	12670	34	4L7	POZPY
L	12670	12960	35	4L5	not typical 4L - grey (carbonaceous)
					+ almost complete lack of sulfides.
L	12960	12988	36	4L35	
L	12988	12999	37	4G0	
L	12999	13028	38	4L35	as in unit 36
L	13028	13056	39	4L0	As in unit 35, no carbonates
L	13056	13073	40	9900	
L	13073	13145	41	4L437	POZPY
L	13145	13159	42	4F64	
L	13159	13235	43	4L37	PO
L	13235	13237	44	4F4	
L	13237	13265	45	4L37	PO
L	13265	13270	46	4D0	
L	13270	13277	47	4L37	
L	13277	13360	48	4E0	SANDY PYRITE 5' CORE REC.
L	13360	13633	49	4L6	→ 4L3 PO
					327.0' - 337.0 8' REC
					337.0-347 3' REC
L	13633	13694	50	4L3	
L	13694	13746	51	4L3	? ground core Fault zone?
L	13746	13784	52	4E1	bixiated
L	13784	13794	53	5A10	? graphitic gouge.
L	13794	14235	54	5A1	Variably calcareous throughout
					Silica mostly as Foliaform seams PYZPO
L	14235	14530	55	5B69	similar to 5A, but not as carbonaceous
L	14530	15330	56	5A1	as in unit 54, gradational contact
					with unit 55 over 30', Variably calc.
L	15330	15340	57	5A1	graphitic gouge
L	15340	15470	58	5A1	As in unit 56
L	15470	15550	59	5A3	
L	15550	15620	60	5A3	As in unit 59 less carbonates
L	15620	15700	61	5A1	
L	15700	15720	62	5A1	? graphitic gouge
L	15720	15870	63	5A1	relatively non-calcareous
		EOH			

DDH V-46-R (2 / 8)

Cyprus Anvil Mining Corp.
Structural Log

Logged By: DJH.

Code	From	To	Feature	Sym	S_1 Dip Direct.	S_2 Dip Direct.	Description
1	10 14	16 20	22 24	26	28 32	34 38	
S		1/1250	CIS12			610 2210	S region 125-180.5
S		1/1460	CIS12			718 2210	
S		1/1650	CIS12			718 2210	
S		1/1805	IF12	E			Z region 180.5-197.0
S		1/1860	CIS12			714 2210	
S		1/1970	IF12	3			S region 197-205.6
S		2/0056	IF12	S		614 2210	
S		2/1280	PIS12			413 2210	R region 205.6-240.0
S		2/1410	IF12	R		612 2210	PS2 region 240.0-256.0
S		2/2560	IF12	P		718 2210	S region 256-280.0
S		2/1720	CIS12			716 2210	
S		2/1810	IF12	E			Z region 280-290.6
S		2/2906	IF12	Z		715 2210	D.D. region 290.6-328.0
S		3/1100	CIS12			717 2210	
S		3/2180	IF12	D		810 2210	R region 328.0-336.5
S		3/3365	IF12	R			Z region 336.5-362.0
S		3/4180	CIS12			614 2210	
S		3/6120	IF12	3		617 2210	S region 362.0-374.5'
S		3/7495	IF12	S			R region 374.5-391.0
S		3/8120	PIS12			711 2210	
S		3/9110	IF12	R			M region 391.0-427.0
S		4/0120	CIS12			715 2210	
S		4/2220	CIS12			615 2210	
S		4/2170	IF12	M			Z region 427.0-477.0
S		4/4120	CIS12			419 2210	
S		4/6120	CIS12			812 2210	
S		4/7170	IF12	Z			D.D. region 477.0-504
S		4/8120	CIS12			614 2210	
S		5/0490	IF12	D		615 2210	Z region 504-527.0
S		5/1180	CIS12			710 2210	
S		5/2170	IF12	3			S region 527-545.0
S		5/3170	CIS12			710 2210	
S		5/4150	IF12	E			Z region 545-555
S		5/5550	IF12	3		619 2210	S region 555-569
S		5/6900	IF12	S			Post D2 breccia 569-587-
		EOH					no S2 measured

DDH V-46-R (2 8)

Cyprus Anvil Mining Corp.
Geochemical Log (Sampler's Copy)

Logged By: JWM

Sampled By:

Code	From	To	Sample No.	Description		
1	10 14	16 20	22 27	UNIT	LENGTH	REC.
P	12057	12089	11/13318	4E8	3.2	3.2
P	12089	12139	11/13319	4LC	5.0	5.0
P	12139	12176	11/13410	4KE	3.7	3.7
P	12176	12215	11/13411	4LE	3.9	3.9
P	12215	12264	11/13412	4E8	4.9	4.9
P	12264	12279	11/13413	4CO	1.5	1.5
P	12279	12326	11/13414	4F8	4.7	4.7
P	12326	12337	11/13415	4CL	1.1	1.1
P	12337	12358	11/13416	4E8	2.1	2.1
P	12358	12370	11/13417	4G4	1.2	1.2
P	12370	12380	11/13418	4BO	1.0	1.0
P	12380	12397	11/13419	4E8	1.7	1.7
P	12397	12430	11/13510	4L3	3.3	3.3
P	13145	13159	11/13511	4F6	2.4	2.4
P	13159	13235	11/13512	4L37	7.6	7.6
P	13235	13265	11/13513	4L37/4F4	3.0	3.0
P	13265	13277	11/13514	4LD	1.2	1.2
P	13277	13360	11/13515	4EO	8.3	5.0
P	13360	13470	11/13516	4L6	11.0	4.0

CYPRUS ANVIL MINING CORPORATION

DIAMOND DRILL CORE LOG

Hole Number: V-50-R

Project: VANGORDA

Location: VANGORDA PLATEAU

Claim: _____

Terr. Plane Co-ords.: _____ N

_____ E

Grid Co-ords.: _____

_____

Elevation: _____

Fabric Orientation Diagram:

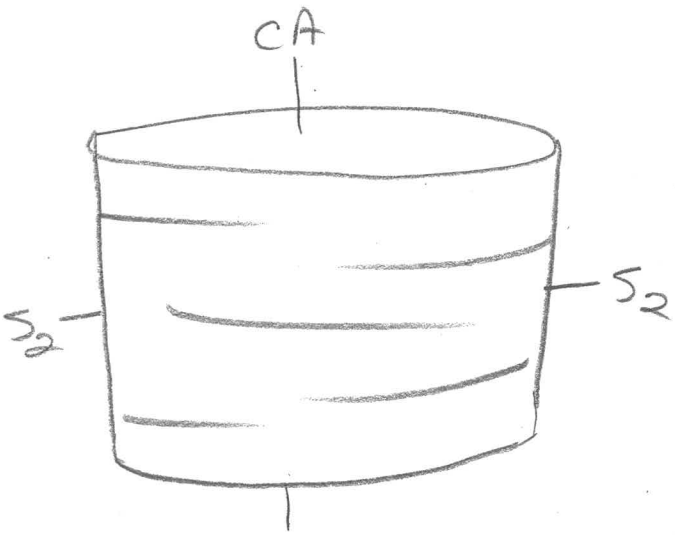

All symmetry determinations looking NW with S_2 dipping SW with dip azimuth 220.

Total Depth: 627.0

Purpose: _____

Logged by: DJH Date(s) Logged: _____

Drilling Contractor: A.D.D.

Core: Size From To Collar Cased and Capped: ____

_____ _____ _____

_____ _____ _____

_____ _____ _____

Started: _____ Completed: _____

Cyprus Anvil Mining Corp.
Diamond Drill Core Log

DDH V-50-R
2 8

Code	Drillhole	Elevation	Northing	Easting	Comments
1	2 8	10 16	17 24	25 32	34 48
T	V-50-R	1157.58	903211.2	5941312.8	FEET

Code	Drillhole	Depth		Zenith Angle		True Azimuth		Comments
1	2 8	10	14	22	26	28	32	34 56
R	V-50-R	0	0	180.0		351.0		AT COLLAR
R	V-50-R	209	0	178.0		354.0		AZ/D ZEN=177° @261'
R	V-50-R	309	0	176.5		01.0		
R	V-50-R	409	0	175.0		01.0		AZ/D ZEN=175° @427'
R	V-50-R	509	0	174.0		026.0		AZ/D ZEN=172° @527'
R	V-50-R	609	0	168.0		189.0		AZ/D ZEN=167° @614'
R				.		.		
R				.		.		
R				.		.		
R				.		.		
R				.		.		
R				.		.		
R				.		.		
R				.		.		
R				.		.		
R				.		.		

Code	Drillhole	Comments, Errant Remarks, Snivellings and/or Lewd Suggestions
1	2 8	10 47

DDH V-50-R (2 / 8)

Cyprus Anvil Mining Corp.

Lithologic Log

Logged By: _____

Code	From	To	Unit	Code	Description
1	10 14	16 20	22 23	25 27	
C	1 1 10 0	1/1/20	1/	#1	triconed - no core
L	1/1/20	1/1/40	12	4IG4	w/ minor 4E8
L	1/1/40	1/2145	13	4IE18	
L	1/2145	1/3155	14	4IE1	? 464?; 5' core rec. in breccia zone w/ slicks & gouge; sil. & mass. sde frags; some remob. Pb+Zn.; probable fault zone.
L	1/3155	1/5171	15	4IG4	calc.
L	1/5171	1/5199	16	4IL13	50% gouge
L	1/5199	1/7171	17	4IG4	w/minor 4L clasts; minor 4E interbanded; non-calc.
L	1/7171	1/8150	18	4IG1E	60:40 interbanded 4G4:4E4; minor 4C & 4D
L	1/8150	1/8170	19	4IA14	
L	1/8170	121/123	110	4IL16	w/minor 4L0 & 4L4
L	121/123	12121/0	111	4IL10	w/minor 5B6; 4 zones of gouge & broken core
L	12121/0	12212 6	112	4IL13	
L	12212 6	12216/	113	4IG1E	→4GE4
L	12216/	12312 0	114	4IE14	brecciated lower ct.; 50% OQO 229-232
L					
L	12312 0	12314 9	115	4IL10	breccia & gouge; some sde frags in siliceous matrix.
L	12314 9	12317 0	116	4IA10	
L	12317 0	12412 4	117	4IL10	
L	12412 4	12417 0	118	4IG14	non-calc.
L	12417 0	12515	119	4IG1E	transition from 4G→4E
L	12515	12796	210	4IE18	w/minor 4G4 bands
L	12796	12965	211	4IL10	weakly "altered" appearance
L	12965	13015 5	212	4IL10	zone of minor gouge w/ broken & lost core
L	13015 5	13214 0	213	4IL16	w/ minor po & ±w.M. alt'n
L	13214 0	13466	214	4IL13	V. minor po; w/ minor 4L6
L	13466	13566	215	4IL13	gouge plus broken & lost core zone
L	13566	13655	216	4IL13	→4L32 locally
L	13655	13673	217	4IL13	w/ mariposite along S2 surfaces
L	13673	13774	218	4IL12	→4L23; faulted lower ct.
L	13774	13810	219	5ID16	"dirty" beige-green.

DDH V-50-R (2 / 8)

Cyprus Anvil Mining Corp.

Lithologic Log

Logged By: _____

Code	From	To	Unit	Code	Description
1	10 14	16 20	22 23	25 27	
L	13181 0	13196 0	310	4L10	minor silicification & minor W.M. ~~alt'n~~ alt'n
L	13196 0	14157 0	311	4L17	→ 4L73; strong W.M. alt'n
L	14157 0	14172 0	312	4L17	→ 4L76
L	14172 0	14185 5	313	4L10	→ 4L3 locally; mod → strong W.M. alt'n throughout.
L	14185 5	14193 4	314	5B16	→ 5B621 towards end of int.
L	14193 4	14197 8	315	4D10	→ 4E4 & 4E8 locally
L	14197 8	15111 0	316	4A10	< 3% tot. sdes (mainly py); → 5A1 locally
L	15111 0	15114 6	317	4C10	
L	15114 6	15116 6	318	4H1	w/ minor 4C
L	15116 6	15120 0	319	4A10	~10% tot. sdes (mainly py)
L	15120 0	15127 0	410	5A1	
L	15127 0	15139 3	411	4L10	w/ mod. W.M. alt'n; minor 4H
L	15139 3	15162 5	412	4L16	v. weakly "altered"? (silicified?); no W.M. alt'n; no sdes.
L	15162 5	16127 0	413	5B16	
		EOH.			

DDH V-50-R (2 / 8)

Cyprus Anvil Mining Corp.
Structural Log

Logged By: DJH.

Code	From	To	Feature	Sym	S_1 Dip Direct.	S_2 Dip Direct.	Description
1	10 14	16 20	22 24	26	28 32	34 38	
S		1/1/130	PLSR			516 2210	%B 0-112
S		1/3120	PLS2			511 2120	R region 112-187
S		1/4190	PLS12			316 2120	
S		1/6140	PLS12			213 2210	
S		1/7160	PLS12			214 2210	
S		1/8170	IF12	R			Z region 187-198'
S		1/9120	CLS12			614 2210	
S		1/9180	IF12	3			S region 198-212
S		12/070	CLS12			517 2210	
S		12/120	IF12	E			Z region 212-237
S		12/170	PLS12			619 2210	
S		12/370	IF12	Z			R region 237-279.6
S		12/470	PLS12			612 2210	
S		12/660	PLS12			714 2210	
S		12/796	IF12	R			Z region 279.6-317.0
S		12/870	CLS12			611 2210	
S		13055	CLS12			411 2210	
S		13/170	IF12	3			S region 317-327.0
S		13270	IF12	S		518 2210	M region 327.0-346.4
S		13464	IF12	M		416 2210	
							Gouge & Bxia zone 346.4-356.3 (no reliable S2)
S		13563	IF12	Z		614 2210	Z region 356.3-379.0
S		13760	CLS12			613 2210	
S		13790	IF12	3			S region 379.0-392.0
S		13920	IF12	E		812 2210	Z region 392.0-408
S		14080	IF12	Z		612 2210	D.D. region 408-427
S		14270	IF12	D		712 2210	M region 427-487
S		14470	CLS12			610 2210	
S		14670	CLS12			617 2210	
S		14870	IF12	M		710 2210	R region 487-517.0
S		15070	PLS12			519 2210	
S		15170	IF12	R			Z region 517.0-543.0
S		15250	CLS12			612 2210	
S		15430	IF12	Z		518 2210	P region 543.0-620.0

DDH V-50-R (2 / 8)

Cyprus Anvil Mining Corp.
Structural Log

Logged By: DJH.

Code	From	To	Feature	Sym	S_1 Dip Direct.	S_2 Dip Direct.	Description
1	10 14	16 20	22 24	26	28 32	34 38	
S		151630	PIS12			810220	
S		151830	PIS2			610210	
S		161030	PIS12			610220	
S		162100	IF12P			618220	S region 620-627
		EOH					

DDH V-50-R (2 8)

Cyprus Anvil Mining Corp.
Geochemical Log (Sampler's Copy)

Logged By: DJH.

Sampled By:

Code	From	To	Sample No.	Description		
1	10 14	16 20	22 27	UNIT	LENGTH	REC.
P	1/1120	1/1140	1/14011	4G4	2.0	2.0
P	1/1140	1/1190	1/14012	4E8	5.0	5.0
P	1/1190	1/1245	1/14013	4E8	5.5	5.5
P	1/1245	1/1315	1/14014	4E1?	7.0	4.9
P	1/1315	1/1370	1/14015	4G4	5.5	5.5
P	1/1370	1/1420	1/14016	4G4	5.0	5.0
P	1/1420	1/1470	1/14017	4G4	5.0	5.0
P	1/1470	1/1520	1/14018	4G4	5.0	5.0
P	1/1520	1/1571	1/14019	4G4	5.1	5.1
P	1/1571	1/1599	1/14110	4L3	2.8	2.8
P	1/1599	1/1640	1/14111	4G4	4.1	4.1
P	1/1640	1/1690	1/14112	4G4	5.0	5.0
P	1/1690	1/1740	1/14113	4G4	5.0	5.0
P	1/1740	1/1771	1/14114	4G4	3.1	3.1
P	1/1771	1/1811	1/14115	4GE	4.0	4.0
P	1/1811	1/1850	1/14116	4GE	3.9	3.9
P	1/1850	1/1870	1/14117	4A4	2.0	2.0
P	1/1870	1/1920	1/14118	4L6	5.0	5.0
P	12126	12161	1/14119	4GE	3.5	3.5
P	12161	12320	1/14120	4E4	5.9	5.9
P	12320	12370	1/14121	4LA	5.0	5.0
P	12424	12470	1/14212	4G4	4.6	4.6
P	12470	12515	1/14213	4GE	4.5	4.5
P	12515	12570	1/14214	4E8	5.5	5.5
P	12570	12620	1/14215	4E8	5.0	5.0
P	12620	12670	1/14216	4E8	5.0	5.0
P	12670	12720	1/14217	4E8	5.0	5.0
P	12720	12755	1/14218	4E8	3.5	3.4
P	12755	12796	1/14219	4E8	4.1	4.1
P	14934	14978	1/14310	4DO	4.4	4.4

DDH V-50-R (2 / 8)

Cyprus Anvil Mining Corp.
Geochemical Log (Sampler's Copy)

Logged By: DJH

Sampled By:

Code	From	To	Sample No.	Description
1	10 14	16 20	22 27	UNIT LENGTH REC.
P	5110	5116	11/41311	4CO 3.6 3.6
P	5116	5166	11/41312	4H1 2.0 2.0
P	5166	5210	11/41313	4AO 3.4 3.4

CYPRUS ANVIL MINING CORPORATION

DIAMOND DRILL CORE LOG

Hole Number: V-60-R

Project: VANGORDA

Location: VANGORDA PLATEAU

Claim: _____

Terr. Plane Co-ords.: _____ N

_____ E

Grid Co-ords.: _____

_____

Elevation: _____

Total Depth: 492.0

Fabric Orientation Diagram:

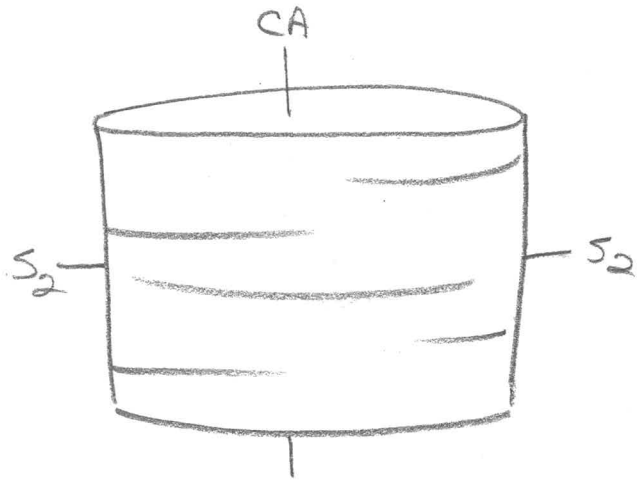

All symmetry determinations looking NW with S_2 dipping SW with dip azimuth 220.

Purpose: _____

Logged by: D.J.H. Date(s) Logged: _____

Drilling Contractor: A.D.D.

Core: Size From To Collar Cased and Capped: _____

_____ _____ _____

_____ _____ _____

_____ _____ _____

Started: _____ Completed: _____

Cyprus Anvil Mining Corp.
Diamond Drill Core Log

DDH V-60-R
2 8

Code	Drillhole	Elevation	Northing	Easting	Comments
1	2 8	10 16	17 24	25 32	34 48
T	V-60-R	1158.42	903254.4	594180.5	FEET

Code	Drillhole	Depth	Zenith Angle	True Azimuth	Comments
1	2 8	10 14	22 26	28 32	34 56
R	V-60-R	0 0	180.0	075.0	AT COLLAR
R	V-60-R	174 0	178.5	098.0	ACID ZEN=178° @147'
R	V-60-R	274 0	178.0	073.0	ACID ZEN=178° @265'
R	V-60-R	374 0	174.5	096.0	
R	V-60-R	474 0	171.0	128.0	ACID ZEN=173° @447'
R			.	.	
R			.	.	
R			.	.	
R			.	.	
R			.	.	
R			.	.	
R			.	.	
R			.	.	
R			.	.	
R			.	.	
R			.	.	

Code	Drillhole	Comments, Errant Remarks, Snivellings and /or Lewd Suggestions
1	2 8	10 47

DDH V-60-R (2–8)

10 E

Cyprus Anvil Mining Corp.

Lithologic Log

Logged By: DJH

Code (1)	From (10–14)	To (16–20)	Unit (22–23)	Code (25–27)	Description
L	0	126	1	#	O/B - granitic boulders
L	126	141	2	4A0	sde deficient; 5A1?
L	141	147	3	4C3	70% tot. sdes (mainly py); → 4E1 locally
L	147	153	4	4CA	60:40 interbanded 4C3:4A0
L	153	168	5	4A4	
L	168	174	6	4L3	2.5' core rec.; no sdes; minor mariposite?
					;clay alt'n?
L	174	185	7	4A0	w/minor 4E0 & 4C0
L	185	197	8	4C0	~30% tot. sdes (mainly py)
L	197	200		5D0	
L	200	215	9	4C0	variably brecciated throughout int.
L	215	218	10	5D0	Kaolinitized? mottled variety
L	218	226	11	4C0	~60% tot. sdes (mainly py)
L	226	228	12	4AE	60:40 interbanded 4A0:4E0
L	228	268	13	4L0	→ 4L3 locally; minor 4L6
L	268	318	14	4L6	minor foliaform (S1, S2) po, py
L	318	424	15	4L3	→ 4L0 locally; upper ct. gradational;
					zones of gouge & broken core 339.3–364.0,
					375–381;
L	424	427	16	4A0	sde deficient; 5A1?
L	427	428	17	4C0	
L	428	429	18	4A0	as unit 16
L	429	437	19	4L3	
L	437	442	20	5A0	w/minor 4A0
L	442	444	21	4L3	5D protolith?
L	444	457	22	4A0	10-15% tot. sdes (mainly py)
L	457	473	23	4L0	w.M. alt'n decreasing along int.
L	473	492	24	5B6	unaltered
		EOH			

DDH V-60-R-28

Cyprus Anvil Mining Corp.
Structural Log

Logged By: _____

Code	From	To	Feature	sym	S_1 Dip Direct.	S_2 Dip Direct.	Description
	10 14	16 20	22 24	26	28 32	34 38	
S		1/121.6	CLS2			518 2210	Z sym. region 126.5 - 141.6
S		1/141.5	IF12	Z		613 2210	R region 141.6 - 153.4
S		1/153.4	IF12	R		519 2210	Z region 153.4 - ~~176.3~~ 174.4
S		1/174.4	IF12	Z		618 2210	R region 176.3 - 228.8
S		1/181.9	PLS12			616 2210	
S		121/120	PLS12			510 2210	
S		121.8.8	IF12	R		612 2210	S region 228.8 - 261.0
S		121.9.0	CLS12			613 2210	
S		121.6.1.0	IF12	E			Z region 261.0 - 269.0
S		121.6.9.0	IF12	S		619 2210	S region 269.0 - 286.0
S		121.8.6.0	IF12	S		57 2210	PS2 region 286.0 - 318.6
S		130.6.0	PLS12			519 2210	
S		131.8.6	IF12	P			S region 318.6 - 339.0
S		131.7.0	CLS12			614 2210	
S		131.9.0	IF12	S			Gouge & Breccia zone
S		136.0.0	PLS12			714 2210	339.0 - 365.0
S		136.5.0	IF12			519 2210	D.D. region 365.0 - 373.0
S		137.3.0	IF12	D			M region 373.0 - 404.0
S		138.4.0	CLS12			514 2210	
S		140.4.0	IF12	M		612 2210	D.D. region 404.0 - 417
S		141.7.0	IF12	D		612 2210	S region 417 - 432
S		143.2.0	IF12	S		610 2210	P region 432 - 492
S		145.5.0	PLS12			614 2210	
S		147.5.0	PLS12			615 2210	
S		149.2.0	PLS12			613 2210	
		EOH					

DDH V-60-R (2 8)

Cyprus Anvil Mining Corp.
Geochemical Log (Sampler's Copy)

Logged By: DJH

Sampled By:

Code	From	To	Sample No.	Description		
1	10 14	16 20	22 27	UNIT	LENGTH	REC.
P	11216 5	11311 5	1 1/14314	4AO	5.0	2.8
P	11311 5	11316 5	1 1/14315	4AO	5.0	5.0
P	11316 5	11411 6	1 1/14316	4AO	5.1	5.1
P	11411 6	11474	1 1/14317	4C3	5.8	5.8
P	11474	11534	1 1/14318	4CA	6.0	6.0
P	11534	11584	1 1/14319	4A4	5.0	5.0
P	11584	11634	1 1/14410	4A4	5.0	5.0
P	11634	11687	1 1/14411	4A4	5.3	5.3
P	11687	11742	1 1/14412	4L3	5.5	3.3
P	11742	11792	1 1/14413	4AO	5.0	5.0
P	11792	11853	1 1/14414	4AO	6.1	6.1
P	11853	11910	1 1/14415	4CO	5.7	5.7
P	11910	11976	1 1/14416	4CO	6.6	6.6
P	11976	12002	1 1/14417	5DO	2.6	2.4
P	12002	12052	1 1/14418	4CO	5.0	5.0
P	12052	12102	1 1/14419	4CO	5.0	5.0
P	12102	12153	1 1/14510	4CO	5.1	5.1
P	12153	12183	1 1/14511	5DO	3.0	3.0
P	12183	12223	1 1/14512	4CO	4.0	4.0
P	12223	12269	1 1/14513	4CO	4.6	4.6
P	2269	2287	1454	4AE	1.8	1.8
P	14444	14490	1 1/14515	4AO	4.6	4.6
P	14490	14540	1 1/14516	4AO	5.0	5.0
P	14540	14570	1 1/14517	4AO	3.0	3.0

CYPRUS ANVIL MINING CORPORATION

DIAMOND DRILL CORE LOG

Hole Number: V-110-R

Project: VANGORDA

Location: VANGORDA PLATEAU

Claim: _____

Terr. Plane Co-ords.: _____ N

_____ E

Grid Co-ords.: _____

_____

Elevation: _____

Total Depth: 547.0

Fabric Orientation Diagram:

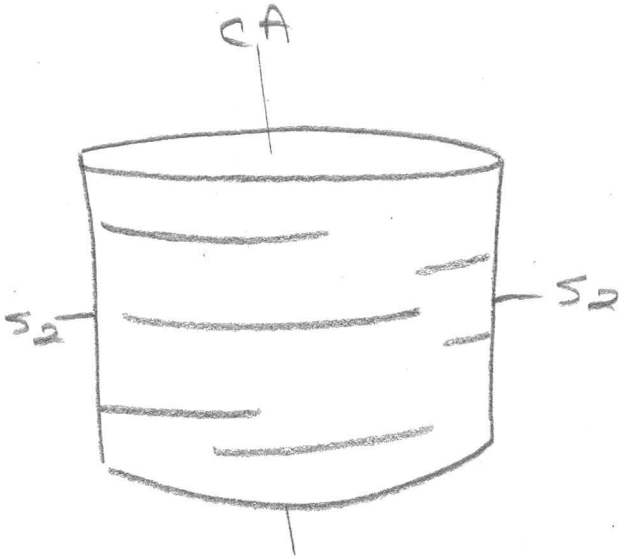

All symmetry determinations looking NW with S2 dipping SW with dip azimuth 220.

Purpose: _____

Logged by: DJH Date(s) Logged: _____

Drilling Contractor: A.D.D.

Core: Size From To Collar Cased and Capped: _____

_____ _____ _____

_____ _____ _____

_____ _____ _____

Started: _____ Completed: _____

Cyprus Anvil Mining Corp.
Diamond Drill Core Log

DDH V-110-R
2 8

Code	Drillhole	Elevation	Northing	Easting	Comments
1	2 8	10 16	17 24	25 32	34 48
T	V-110-R	1157.82	903231.1	594154.6	FEET

Code	Drillhole	Depth	Zenith Angle S.S.	True S.S. Azimuth	Comments
1	2 8	10 14	22 26	28 32	34 56
R	V-110-R	0 0	180.0	320.0	AT COLLAR
R	V-110-R	143 0	177.7	321.0	NO ACID TEST
R	V-110-R	213 0	178.0	323.0	ACID ZEN= 179°
R	V-110-R	333 0	175.5	099.0	ACID ZEN= 178°
R	V-110-R	413 0	175.0	093.0	ACID ZEN= 175°
R	V-110-R	533 0	173.0	087.0	ACID ZEN= 173
R			.	.	
R			.	.	
R			.	.	AT 413 SS WAS 170.7
R			.	.	AT 533 SS WAS 168.0
R			.	.	
R			.	.	
R			.	.	
R			.	.	
R			.	.	
R			.	.	

Code	Drillhole	Comments, Errant Remarks, Snivellings and /or Lewd Suggestions
1	2 8	10 47

DDH V-11-0-R (2 / 8)

Cyprus Anvil Mining Corp.
Lithologic Log

Logged By: DJH.

Code	From ft	To ft	Unit	Code	Description
1	10 14	16 20	22 23	25 27	
L	1 1 10 0	1 1 31 8 5	1	1 #	triconed - no core
L	1 1 31 8 5	1 1 43 0	2	5 1 B 1 6	
L	1 1 43 0	1 1 51 0	3	4 L 1 3	white mica alt.; no sdes; breccia;
					gouge 148.5-150.5; →4L31
L	1 1 51 0	1 1 66 6	4	4 I J 1 4	→4J487 locally; ~30% 4D4 frags &
					bands; very heterogeneous section
L	1 1 66 6	1 1 96 0	5	4 1 C 1 0	w/20% 4E0→4E8 interbanded
L	1 1 96 0	1 2 1 1 0	6	4 1 C 1 0	as unit 5 only brecciated.
L	1 2 1 1 0	1 2 1 2 5 0	8	4 1 C 1 E	60:40 interbanded 4C0 : 4E1;
					minor 4L0
L	1 2 1 2 5 0	1 2 3 1 8 8	9	4 1 L 1 3	w/minor 4C, 4D interbanded in
					upper part of int.; white mica alt.
L	1 2 3 1 8 8	1 2 3 1 9 4	10	4 1 H 1	
L	1 2 3 1 9 4	1 2 4 0 2	11	4 L 1 3	white mica alt.
L	1 2 4 0 2	1 2 4 0 7	12	4 1 H 1 0	
L	1 2 4 0 7	1 2 4 1 2 2	13	4 1 E 1 0	
L	1 2 4 1 2 2	1 2 4 5 5	14	4 C 1 0	~50% py.
L	1 2 4 5 5	1 2 4 9 8	15	4 L 1 3	white mica envelope
L	1 2 4 9 8	1 2 5 1 2 5	16	4 1 B 1 4	weakly micaceous.
L	1 2 5 1 2 5	1 2 5 3 3 5	17	4 1 C 1 7	
L	1 2 5 3 3 5	1 2 8 3 0	18	4 L 1 3	strong white mica alt.
L	1 2 8 3 0	1 3 1 1 5 3	19	4 L 1 0	→4L07 ; white mica less
					strongly developed than above int.
L	1 3 1 1 5 3	1 3 3 1 0 0	20	5 B 1 7	→5B76
L	1 3 3 1 0 0	1 3 5 1 9 2	21	4 L 1 0	→4L07
					as unit 19; minor 512 foliaform po;
					unit appears transitional between
					4L3 & 5B76
L	1 3 5 1 9 2	1 3 7 1 2 8	22	4 L 1 3	white mica alt strongly dev.
L	1 3 7 1 2 8	1 3 9 1 1 4	23	4 L 1 0	→4L07 as units 19 & 21
L	1 3 9 1 1 4	1 3 9 1 4 4	24	5 1 D 1 6	
L	1 3 9 1 4 4	1 4 1 0 0	25	4 L 1 0	→4L07 as units 19, 21 & 23
L	1 4 1 0 0	1 4 5 1 0	26	4 L 1 0	as unit 22
L	1 4 5 1 0	1 4 6 1 0	27	4 L 1 0	as units 19, 21, 25, 23 only w/o
					po.

DDH V-11-09-R (2 / 8)

Cyprus Anvil Mining Corp.
Lithologic Log

Logged By: DJH

Code	From	To	Unit	Code	Description
1	10 14	16 20	22 23	25 27	
L	14161 0	14161 9	218	5IA11	
L	14161 9	14166 1	219	4IC10	60% py ; → 4DO locally
L	14166 1	14619 5	310	4IE10	generally gritty; minor sph. lams. throughout
L	14619 5	14710	311	4IB14	
L	14710	14723	312	4IE14	50:50 interbanded 4EO : 4AO
L	14723	14810	313	4IC14	60:40 " 4CO : 4AO → 4A4 locally.
L	14810	14915	314	4IK10	
L	14915	14934	315	4IA10	
L	14934	15097	316	4IL13	white mica alt strongly dev.; 6" graphitic gouge @ top of int.; breccia 493.9 – 499.0
L	15097	15170	317	5IB17	→ 5B76; unaltered, no sdes.
		EOH			

DDH V-110-R (2 of 8)

Cyprus Anvil Mining Corp.
Structural Log

Logged By: DJH

Code	From	To	Feature	Sym	S_1 Dip Direct.	S_2 Dip Direct.	Description
1	10 14	16 20	22 24	26	28 32	34 38	
S		1400	PS2			60 220	PS2 and Bxia 0-232
S		1820	PS2			51 220	
S		2110	PS2			70 220	comp. layering in sdcs.
S		2320	F2S			68 220	S sym 232-~~279~~ 251.5
S		2515	F2Z			75 220	Z sym 251.5-300.0
S		2680	CS2			70 220	
S		2870	CS2			70 220	
S		3010	F23				S sym 300.0-~~327~~ 319.5
S		3055	CS2			69 220	
S		3195	F2Z				Z sym 319.5-327.5
S		3275	F23			65 220	S sym 327.5-359.5
S		3470	CS2			72 220	
S		3595	F2Z			55 220	Z sym 359.5-376.0
S		3760	F23			60 220	S sym 376.0-394.0
S		3940	F2Z			67 220	Z sym 394.0-410.0
S		4100	F23			66 220	S sym 410.0-435.0
S		4350	F2Z			73 220	Z sym 435.0-461.0
S		4510	CSZ			62 220	
S		4610	F2Z				PS2 461.0-491.5
S		4730	PS2			61 220	
S		4915	F2S			75 220	S sym 491.5-514.0
S		5110	CS2			75 220	
S		5140	F2Z				Z sym 514.0-547.0
S		5310	CS2			78 220	
S		5470	CS2			78 220	
		EOH					

DDH V-110-R (2 / 8)

Cyprus Anvil Mining Corp.
Geochemical Log (Sampler's Copy)

Logged By: DJH.

Sampled By:

Code	From	To	Sample No.	Description		
1	10 14	16 20	22 27	Length	Rec.	Unit
P	1151 0	1156 0	1V013511	5.0	3.9	4J4
P	1156 0	1161 0	1V013512	5.0	5.0	4J4
P	1161 0	1166 6	1V013513	5.6	5.5	4J4
P	1166 6	1171 0	1V013514	4.4	3.9	4CO
P	1171 0	1176 0	1V013515	5.0	4.6	4CO
P	1176 0	1181 0	1V013516	5.0	3.7	4CO
P	1181 0	1186 0	1V013517	5.0	4.0	4CO
P	1186 0	1191 0	1V013518	5.0	5.0	4CO
P	1191 0	1196 0	1V013519	5.0	5.0	4CO
P	1196 0	1201 0	1V013610	5.0	5.0	4CO
P	1201 0	1206 0	1V013611	5.0	3.8	4CO
P	1206 0	1211 0	1V013612	5.0	5.0	4CO
P	1211 0	1216 0	1V013613	5.0	4.5	4CE
P	1216 0	1221 0	1V013614	5.0	5.0	4CE
P	1221 0	1225 0	1V013615	4.0	5.0	4CE
P	1225 0	1230 0	1V013616	5.0	5.0	4LO
P	1230 0	1238 8	1V013617	8.8	8.6	4LO
P	1238 8	1245 5	1V013618	6.7	6.0	4CE
P	1245 5	1249 8	1V013619	4.3	4.3	4LO
P	1249 8	1253 5	1V013710	3.7	3.7	4BC
P	1461 9	1466 1	1V013711	4.2	4.2	4CO
P	1466 1	1471 0	1V013712	4.9	4.9	4EB
P	1471 0	1476 0	1V013713	5.0	5.0	4EA
P	1476 0	1480 1	1V013714	4.1	4.1	4CA
P	1480 1	1486 0	1V013715	5.9	5.6	4KO
P	1486 0	1491 5	1V013716	5.5	5.5	4KO
P	1491 5	1493 4	1V013717	1.9	1.75	4AO

CYPRUS ANVIL MINING CORPORATION

DIAMOND DRILL CORE LOG

Hole Number: V-114-R

Project: VANGORDA

Location: VANGORDA PLATEAU

Claim: _____

Terr. Plane Co-ords.: _____ N

_____ E

Grid Co-ords.: _____

_____

Elevation: _____

Fabric Orientation Diagram:

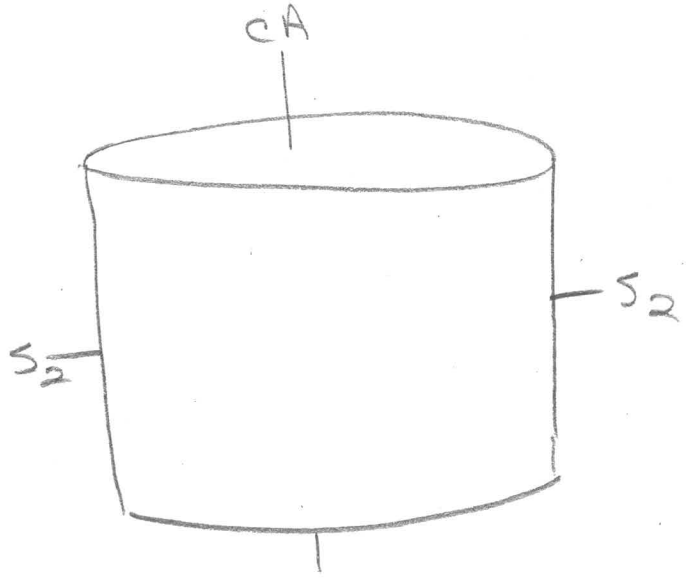

All symmetry determinations looking NW with S_2 dipping SW with dip azimuth 220.

Total Depth: 6330

Purpose: _____

Logged by: DJH. Date(s) Logged: _____

Drilling Contractor: A.D.D.

Core: Size From To Collar Cased and Capped: ____

_____ _____ _____

_____ _____ _____

_____ _____ _____

Started: _____ Completed: _____

Cyprus Anvil Mining Corp.
Diamond Drill Core Log

DDH V-114-R
2 8

Code	Drillhole	Elevation	Northing	Easting	Comments
1	2 8	10 16	17 24	25 32	34 48
T	V-114-R	1157.56	903188.2	594107.4	FEET

Code	Drillhole	Depth	Zenith Angle	True Azimuth	Comments
1	2 8	10 14	22 26	28 32	34 56
R	V-114-R	0 0	180.0	056.0	AT COLLAR
R	V-114-R	128 0	178.0	056.0	ACID ZEN=179° @136'
R	V-114-R	262 0	178.1	033.0	ACID ZEN=178° @268'
R	V-114-R	342 0	177.7	325.0	ACID ZEN=178° @348'
R	V-114-R	422 0	178.5	171.0	ACID ZEN=177° @428'
R	V-114-R	492 0	174.5	026.0	ACID ZEN=175° @498'
R	V-114-R	622 0	169.5	040.0	ACID ZEN=168° @628'
R			.	.	
R			.	.	
R			.	.	
R			.	.	
R			.	.	
R			.	.	
R			.	.	
R			.	.	
R			.	.	

Code	Drillhole	Comments, Errant Remarks, Snivellings and /or Lewd Suggestions
1	2 8	10 47

DDH V-11-4-R (2 / 8)

Cyprus Anvil Mining Corp.
Lithologic Log

Logged By: DJH.

Code	From (ft.)	To (ft.)	Unit	Code	Description
1	10 14	16 20	22 23	25 27	
L	1 1 10 0	1 1 10 8 0	1 1	1 1#	O/B - granitic boulders
L	1 1 0 8 0	1 1 1 0 0	1 2	4 1 G 1 0	end of int. uncertain
L	1 1 1 0 0	1 1 2 1 0	1 3	4 1 G 1 0	2' core recovered -; minor sde. frags
	1 1 1	1 1 1	1	1 1	& gouge;
L	1 1 2 1 0	1 1 2 1 2 7	1 4	4 L 1 3	white mica alt.; → 4L37
L	1 1 2 1 2 7	1 1 2 1 7 6	1 5	5 1 D 1 3	
L	1 1 2 1 7 6	1 1 3 1 0 6	1 6	4 1 L 1 0	; → 4L7 locally; white mica
	1 1 1	1 1 1	1	1 1	alt. weakly dev. throughout int.
L	1 1 3 1 0 6	1 1 3 1 8 1	1 7	5 1 D 1 3	
L	1 1 3 1 8 1	1 1 4 1 2	1 8	5 1 B 1 7	→ 5B76
L	1 1 4 1 2	1 1 4 1 4 2	1 9	5 1 D 1 3	
L	1 1 4 1 4 2	1 1 5 1 3 9	1 1 0	5 1 B 1 7	→ 5B76; V. minor 5D3
L	1 1 5 1 3 9	1 1 5 1 5 6	1 1 1	5 1 D 1 0	
L	1 1 5 1 5 6	1 1 6 1 9 5	1 1 2	5 1 B 1 7	→ 5B76; as unit 10; minor 4L7
L	1 1 6 1 9 5	1 1 7 1 1 8	1 1 3	5 1 D 1 3	
L	1 1 7 1 1 8	1 2 0 8 5	1 1 4	5 1 B 1 6	
L	1 2 0 8 5	1 2 1 1 4 0	1 1 5	4 1 L 1 0	→ 4L01; minor white mica & chl. alt.;
	1 1 1	1 1 1	1	1 1	
L	1 2 1 1 4 0	1 2 1 1 5 7	1 1 6	4 1 L 1 3	white mica alt.
L	1 2 1 1 5 7	1 2 1 2 9 0	1 1 7	0 1 Q 1 0	w/ 15% 4LO
L	1 2 1 2 9 0	1 2 3 1 2 5	1 1 8	4 1 L 1 3	white mica alt.
L	1 2 3 1 2 5	1 2 3 1 5 7	1 1 9	4 1 G 1 4	
L	1 2 3 1 5 7	1 2 4 1 0 7	1 2 0	4 1 L 1 3	as units 18 & 16
L	1 2 4 1 0 7	1 2 4 1 9 2	1 2 1	4 1 G 1 8	
L	1 2 4 1 9 2	1 2 5 1 4 1	1 2 2	4 1 D 1 0	w/ minor 5D3;
L	1 2 5 1 4 1	1 2 6 1 8 0	1 2 3	5 1 D 1 3	minor 5B6 & 4LO
L	1 2 6 1 8 0	1 2 9 1 1 6	1 2 4	5 1 B 1 2	→ 5B26; minor 5B23
L	1 2 9 1 1 6	1 2 9 4 6	1 2 5	5 1 D 1 0	
L	1 2 9 4 6	1 3 1 0 3 0	1 2 6	4 1 L 1 3	as units 16, 18, 20
L	1 3 1 0 3 0	1 3 1 1 1 2	1 2 7	4 1 G 1 4	
L	1 3 1 1 1 2	1 3 1 2 9	1 2 8	4 1 L 1 3	as units 16, 18, 20, 26
L	1 3 1 2 9	1 3 5 6 0	1 2 9	4 1 L 1 6	→4L67; minor 4L7 & 5D3; minor S12
	1 1 1	1 1 1	1	1 1	foliaform po
L	1 3 5 6 0	1 3 8 1 0 8	1 3 0	4 1 L 1 6	→4L67; ~10% S12 foliaform po;
	1 1 1	1 1 1	1	1 1	minor 5D3
L	1 3 8 1 0 8	1 3 9 1 8 9	1 3 1	4 1 L 1 3	white mica alt.; gouge 395.7-398.9

→ 4L37

DDH V-114-R

Cyprus Anvil Mining Corp.

Lithologic Log

Logged By: DJH.

Code	From	To	Unit	Code	Description
1	10 14	16 20	22 23	25 27	
L	13918	14012 6	312	4K10	→ 4K8 locally
L	14012 6	15112 2	313	5A11	→ 5A16 ; → 5A0 locally
L	15112 2	15117 2	314	5B12	→ 5B26
L	15117 2	15557 4	315	5A10	generally 5A6 ; → 5A1 locally.
L	15557 4	15687	316	4A1C	<2 % Pb+Zn
L	15687	15717 3	317	4C10	minor 4A
L	15717 3	16313 0	318	5B17	→ 5B76

DDH V-114-R (2 / 8) Cyprus Anvil Mining Corp.

Structural Log

Logged By: _____

Code	From	To	Feature	Sym	S_1 Dip Direct.	S_2 Dip Direct.	Description
1	10 14	16 20	22 24	26	28 32	34 38	
S		1/1018.0	PIS12			510 220	Z sym 108 - 136.5
S		1/1280	CIS12			716 220	
S		1/1365	F123				S sym 136.5 - 152.0
S		1/1480	CIS12			719 220	
S		1/1520	F12	ℰ			Z sym 152.0 - 200.0
S		1/1680	CIS12			812 220	
S		1/1818.0	CIS12			717 220	
S		1210100	F12	Z			Indeterminate sym. (ie: Horiz
S		1210170	CIS12			710 220	S2 & D.D.) 200.0 - 268.0
S		1212160	CIS12			610 220	+ PS2
S		1214160	PIS12			519 220	- comp. layering // S2?
S		1216180	F12	Z		718 220	Z sym 268.0 - 295.0
S		1218180	CIS12			710 220	
S		1219560	F123				S sym. 295.0 - 303
S		1310300	F12	ℰ			Z sym 303 - 386.0
S		1310180	PIS12			518 220	- comp. layering in sdes // S2?
S		1312180	CIS12			517 220	
S		1314500	CIS12			511 220	
S		1316180	CIS12			410 220	
S		1318160	F12	M		612 220	M region 386.0 - 555
S		1410170	CIS12			710 220	- equal Z & S w/lots
S		1412180	CIS12			810 220	of ℰ & 3
S		1414180	CIS12			518 220	
S		1416160	CIS12			617 220	
S		1418160	CIS12			611 220	
S		1510160	CIS12			610 220	
S		1512160	CIS12			510 220	
S		1514160	CIS12			812 220	
S		1515500	F12	M			Z sym 555 - 629
S		1516500	CIS12			416 220	
S		1518160	CIS12			712 220	
S		1610300	CIS12			618 220	
S		1612300	CIS12			712 220	
S		1612900	F123				Sym = S 629 - 633
S		1633300	CIS12			617 220	
		EOH					

DDH V-114-R (2 / 8)

Cyprus Anvil Mining Corp.
Geochemical Log (Sampler's Copy)

Logged By: DJH.

Sampled By:

Code	From	To	Sample No.	Description		
				UNIT	LENGTH	REC.
1	10 14	16 20	22 27			
P	12312 5	12357	1V012913	4G4	3.2	3.1
P	12357	12407	1V012914	4LO	5.0	5.0
P	12407	12450	1V012915	4G4	4.3	4.3
P	12450	12492	1V012916	4G4	4.2	4.2
P	12492	12541	1V012917	4DO	4.9	4.9
P	13030	13071	1V012918	4G4	4.1	4.1
P	13071	13112	1V012919	4G4	4.1	4.1
P	13918 9	14026	1V013010	4KO	3.7	3.5
P	15517 4	15630	1V013011	4AC	5.6	5.6
P	15630	15687	1V013012	4AC	5.7	5.6
P	15687	15723	1V013013	4CO	3.6	3.6
P	15723	15773	1V013014	4CO	5.0	4.2
P	11080	11100	1V012911	4GO	2.0	2.0
P	11100	11210	1V012912	?	11.0	2.1

CYPRUS ANVIL MINING CORPORATION

DIAMOND DRILL CORE LOG

Hole Number: V-117-R

Project: VANGORDA

Location: VANGORDA PLATEAU

Claim: _____

Terr. Plane Co-ords.: _____ N

_____ E

Grid Co-ords.: _____

_____

Elevation: _____

Fabric Orientation Diagram:

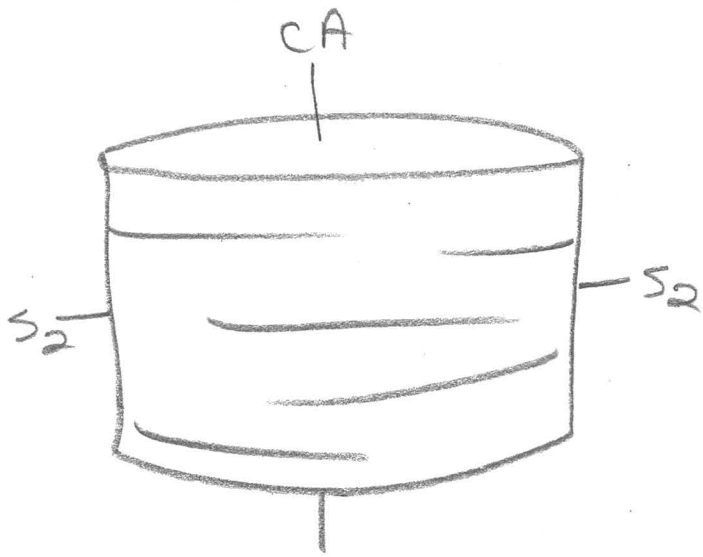

All symmetry determinations looking NW with S_2 dipping SW with dip azimuth 220.

Total Depth: 437.0

Purpose: _____

Logged by: DJH Date(s) Logged: _____

Drilling Contractor: A.D.D.

Core: Size From To Collar Cased and Capped: ____

_____ _____ _____

_____ _____ _____

_____ _____ _____

Started: _____ Completed: _____

Cyprus Anvil Mining Corp.
Diamond Drill Core Log

DDH V-1117-R

Code	Drillhole	Elevation	Northing	Easting	Comments
1	2 8	10 16	17 24	25 32	34 48
T	V-1117-R	1154.69	9031511.1	594067.6	FEET

Code	Drillhole	Depth	Zenith Angle	True Azimuth	Comments
1	2 8	10 14	22 26	28 32	34 56
R	V-1117-R	00	1810.0	3333.0	ATCOLLAR
R	V-1117-R	1190	1791.0	3431.0	
R	V-1117-R	2690	1781.5	3531.0	
R	V-1117-R	3500	1771.0	0180.0	
R	V-1117-R	4190	1761.0	1681.0	
R		.	.	.	
R		.	.	.	
R		.	.	.	
R		.	.	.	
R		.	.	.	
R		.	.	.	
R		.	.	.	
R		.	.	.	
R		.	.	.	
R		.	.	.	

Code	Drillhole	Comments, Errant Remarks, Snivellings and/or Lewd Suggestions
1	2 8	10 47

DDH V-117-R (2–8)

Cyprus Anvil Mining Corp.
Lithologic Log

Logged By: DJH

Code	From	To	Unit	Code	Description
1	10 14	16 20	22 23	25 27	
L	100	1128	1	#1	O/B - cored 6' of fine gravel and 1'
					heavily weathered 4L?
L	1128	1214	2	4E8	w/ 1-2% Fe_3O_4 ; minor $CO_3^=$ clasts
L	1214	1244	3	5B1	w/ minor 4L @ start & end of int.
L	1244	1270	4	4E8	as unit 2 ; minor 4L
L	1270	1301	5	5B6	w/ minor po ; → 4L0 @ end of interval.
L	1301	1370	6	4E8	w/ 20% sil & $CO_3^=$ clasts.
L	1370	1463	7	4EH	→ 4EH1 ; massive po/py
L	1463	1489	8	4L7	
L	1489	1555	9	4E8	weakly calc. ; minor siliceous clasts
L	1555	1571	10	4L7	
L	1571	1605	11	4A0	v. minor (<1%) py
L	1605	1648	12	5D6	gradational upper ct. (4L) ; unit
					could be called 4L6
L	1648	1931	13	5B6	→ 5B61 @ end of int.
L	1931	1974	14	4A0	
L	1974	1984	15	4D0	
L	1984	1994	16	4L6	5D6?
L	1994	2008	17	4H1	
L	2008	2017	18	4L7	
L	2017	2036	19	5D3	
L	2036	2083	20	4L7	→ 4L4 locally
L	2083	2266	21	4L0	v. minor po.
L	2266	2445	22	4L7	→ 4L72 ; po ≈ py
L	2445	2600	23	4L7	minor py
L	2600	2742	24	4L2	minor po
L	2742	2757	25	5D3	
L	2757	2810	26	4L7	minor po ; minor 4L6
L	2810	2830	27	5D3	
L	2830	3070	28	4L7	→ 4L3 locally
L	3070	3161	29	4L2	
L	3161	3350	30	4L3	W.M. alt'n. (strong) ; gouge 319.3-320.4,
					and 332.2-335.0
L	3350	3424	31	4A7	<2% po
L	3424	3590	32	5A1	no sdes
L	3590	3704	33	5B1	→ 5B162 ; → 5A1 locally.

DDH V-11-7-R (2 / 8)

Cyprus Anvil Mining Corp.
Lithologic Log

Logged By: DJH.

Code	From	To	Unit	Code	Description
1	10 14	16 20	22 23	25 27	
L	13710 4	13712 6	314	51A1	
L	13712 6	13813 3	315	51B16	
L	13813 3	14317 0	316	51A1	siliceous boudins & thin lams.
		EOH			
					NOTE: 417 units show traces of chpy. but not worth splitting.

DDH V-117-R (2 / 8)

Cyprus Anvil Mining Corp.
Structural Log

Logged By: DJH.

Code	From	To	Feature	Sym	S_1 Dip Direct.	S_2 Dip Direct.	Description
	10 14	16 20	22 24	26	28 32	34 38	
S		1/1/120	IF12	R			R region 112-156'
S		1/1/190	PIS12			812 2210	
S		1/1390	PIS12			71/ 2210	
S		1/1560	IF12	R		717 2210	Z region 156-165'
S		1/1650	IF12	3		81/ 2120	S region 165-195'
S		1/1850	CIS12			718 2210	
S		1/1950	IF12	E			Z region 195-227'
S		1210150	CIS12			713 2210	
S		121/150	CIS12			715 2210	
S		1212170	IF12	3			S region 227-275'
S		1213170	CIS12			815 2210	
S		1215170	CIS12			716 2210	
S		1217150	IF12	E		714 2210	Z region 275'-292'
S		1218120	CIS12			712 2210	
S		1219120	IF12	3			S region 292-353.5'
S		1310120	CIS12			713 2210	
S		1312120	CIS12			71/ 2210	
S		1314100	CIS12			514 2120	
S		1351355	IF12	E			Z region 353.5-364'
S		1316100	CIS12			619 2210	
S		1316140	IF12	3			S region 364-391
S		1318/0	CIS12			716 2210	
S		1391/0	IF12	S			D.D. region 391-404
S		1410100	CIS12			613 2210	
S		1410140	IF12	D			S region 404-437
S		141/165	CIS12			719 2210	
S		1413170	CIS12			719 2210	
		1E10H					

DDH V-117-R (2 8)

Cyprus Anvil Mining Corp.
Geochemical Log (Sampler's Copy)

Logged By: DJH

Sampled By:

Code	From	To	Sample No.	Description		
1	10 14	16 20	22 27	UNIT	LENGTH	REC.
P	1/1/12 8	1/1/17 0	1 1/13215	4E8	4.2	4.2
P	1/1/17 0	1/121 4	1 1/13216	4E8	4.4	4.4
P	1/121 4	1/1214 4	1 1/13217	5B1	3.0	3.0
P	1/1214 4	1/1217 0	1 1/13218	4E8	2.6	2.5
P	1/1217 0	1/1310 1	1 1/13219	5B6	3.1	3.1
P	1/1310 1	1/1317 0	1 1/13310	4E8	6.9	6.9
P	1/1317 0	1/1463	1 1/13311	4EH	9.3	2.2
P	1/1463	1/1489	1 1/13312	4L7	2.6	2.6
P	1/1489	1/1555	1 1/13313	4E8	6.6	6.6
P	1/1555	1/1605	1 1/13314	4LA	5.0	4.5
P	1/1605	1/1648	1 1/13315	5D6	4.3	4.3
P	1/1931	1/1984	1 1/13316	4AD	5.3	5.3
P	1/1984	12008	1 1/13317	4LH	2.4	2.4

CYPRUS ANVIL MINING CORPORATION

DIAMOND DRILL CORE LOG

Hole Number: V-123-R

Project: VANGORDA

Location: VANGORDA PLATEAU

Claim: _____

Terr. Plane Co-ords.: _____ N

_____ E

Grid Co-ords.: _____

_____

Elevation: _____

Fabric Orientation Diagram:

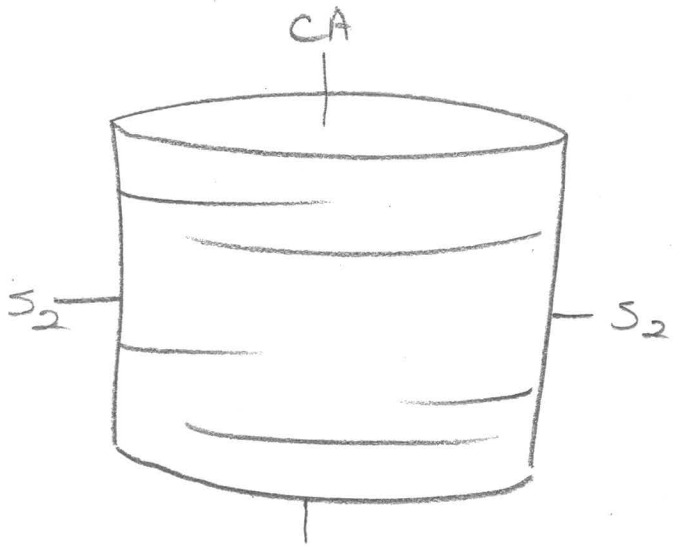

All symmetry determinations looking NW with S_2 dipping SW with dip azimuth 220.

Total Depth: 571.0

Purpose: _____

Logged by: DJH Date(s) Logged: _____

Drilling Contractor: A.D.D. Core: Size From To Collar Cased and Capped: _____

_____ _____ _____

_____ _____ _____

_____ _____ _____

Started: _____ Completed: _____

Cyprus Anvil Mining Corp.
Diamond Drill Core Log

DDH V-1123-R (2–8)

Code	Drillhole	Elevation	Northing	Easting	Comments
1	2–8	10–16	17–24	25–32	34–48
T	V-1123-R	11158.70	9032712.9	5941291.9	FEET

Code	Drillhole	Depth	Zenith Angle	True Azimuth	Comments
1	2–8	10–14	22–26	28–32	34–56
R	V-1123-R	0 0	1810.0	3010.0	AT COLLAR
R	V-1123-R	1123 0	1781.2	3223.0	
R	V-1123-R	1233 0	1781.2	0491.0	
R	V-1123-R	1333 0	1714.0	0185.0	AZI/DIP=1761 @3318'
R	V-1123-R	1403 0	1711.0	0187.0	AZI/DIP=1721 @ 1418'
R	V-1123-R	1493 0	1681.0	0179.0	*AZI/DIP=1721 @ 1498'
R	V-1123-R	1563 0	1641.0	0170.0	AZI/DIP=1671 @ 1570'
R			.	.	
R			.	.	*NOTE: AZI CHANGED FROM
R			.	.	1641° TO 1979°
R			.	.	
R			.	.	
R			.	.	
R			.	.	
R			.	.	
R			.	.	
R			.	.	

Code	Drillhole	Comments, Errant Remarks, Snivellings and/or Lewd Suggestions
1	2–8	10–47
	V-1123-R	GYRO TEST @ 1275' DIP=1781 AZI=0711.5
	V-1123-R	GYRO TEST @ 550' DIP=1651 AZI=0810.0
	V-1123-R	

DDH V-123-8 (2 … 8) sect. 10

Cyprus Anvil Mining Corp.
Lithologic Log

Logged By: DJH

Code	From	To	Unit	Code	Description
1	10 14	16 20	22 23	25 27	
L	0 0	116 0	1	#	triconed - no core
L	116 0	124 6	2	5A0	~10% 4A0
L	124 6	146 8	3	4A0	<2% Pb+Zn ; minor py/po ; ~10%
					interbanded 5A1/5A0
L	146 8	151 5	4	5A0	
L	151 5	152 8	5	5D3	
L	152 8	18~~06~~ 12	6	5B2	→ 5B26 ; ~20% 5B6
L	18~~06~~ 12	182 3	7	4L3	white mica alt. ; → 4L37
L	182 3	199 0	8	4A7	patchy & s12 foliaform po ; ~20%
					4C, 4D
L	199 0	201 0	9	5B6	
L	201 0	225 0	10	4L0	minor py ; white mica alt. strongly dev. ;
					gouge & breccia 209.6 - 214.3 (3'
					lost core) ; → 4L02
L	225 0	247 0	11	5B6	→ 5B67? ; unaltered ; gouge & breccia
					245.9 - 247.0
L	247 0	261 0	12	4L0	chl. alt? ; mod. white mica alt. ; minor po
L	261 0	278 0	13	4L6	→ 4L76 ; ~5% s12 foliaform po ; weak
					white mica alt. ; could be 5D9? ;
					minor 4L7 (white mica alt) interbanded. or 5B769
L	278 0	303 0	14	4L0	as unit 12 ; transition (units 12, 13, 14) zone from
					4L3 → unaltered 5B7/5D.
L	303 0	321 0	15	4L3	white mica alt ; → 4L37
L	321 0	340 4	16	4L3	" " " ; → 4L328
L	340 4	421 0	17	4L3	" " "
L	421 0	423 8	18	5A1	brecciated.
L	423 8	427 0	19	4L7	
L	427 0	436 5	20	5A3	gouge 530 - 536 (4' lost core)
L	436 5	445 3	21	4L3	white mica alt.
L	445 3	503 0	22	5B7	→ 5B76
L	503 0	506 7	23	4J8	→ 4J87
L	506 7	536 0	24	5B7	→ 5B76
L	536 0	571 0	25	5B6	
		EOH			

DDH V-123-R (2 of 8) Cyprus Anvil Mining Corp. Page 4 of 5

Structural Log Logged By: DJH

Code	From	To	Feature	Sym	S_1 Dip Direct.	S_2 Dip Direct.	V-123-R. Description
	10 14	16 20	22 24	26	28 32	34 38	
S		1/1/170	CIS12			715 220	S sym 116 - 129.5
S		1/1245	IF12	Z			Z sym 129.5 - 183.0
S		1/1370	CIS12			617 220	
S		1/1570	CIS12			614 220	
S		1/1710	CIS12			416 220	
S		1/1830	IF12	S			S sym 183.0 - 232.0
S		1/1910	CIS12			512 220	
S		12019 0	CIS12			615 220	
S		12132 0	IF12	Z		616 220	Z sym 232.0 - 256.0
S		12413 0	CIS12			618 220	
S		12516 0	IF12	S		719 220	S sym 256.0 - 289.0
S		12713 0	CIS12			515 220	
S		12819 0	IF12	S		617 220	Indeterminate sym (d.d.)
S		13016 0	CIS12			518 220	289.0 - 360.0
S		13216 0	CIS12			514 220	
S		13410	CIS12			510 220	
S		13610 0	IF12	S		616 220	S sym 360.0 - 406.0
S		13719 0	CIS12			615 220	
S		1410V 0	CIS12			610 220	
S		14016 0	IF12	S			Indeterminate sym (d.d.)
S		14215 0	CIS12			610 220	406.0 - 431.0
S		14419 0	IF12	Z		712 220	Indeterminate sym (PS2)
S		14514 0	IF12	S			431.0 - 449.0
S		14613 0	IF12	S		614 220	Z sym 449.0 - 454.0
S		14719 0	CIS12			618 220	S sym 454.0 - 463.0
S		14919 0	CIS12			612 220	PS2 + POST D2 complications
S		15018 0	IF12	Z			463 - 508
S		15118 0	CIS12			614 220	Z sym 508.0 - 544.0
S		15318 0	CIS12			715 220	
S		15414 0	IF12	Z			PS2 + POST D2 complications
S		15518 0	CIS12			710 220	544 - 571
S		1571/ 0	CIS12			713 220	
		EOH					

12E

DDH V-63-R (2 8)

Cyprus Anvil Mining Corp.
Structural Log

Logged By: JWM

Code	From	To	Feature	Sym	S_1 Dip Direct.	S_2 Dip Direct.	Description
1	10 14	16 20	22 24	26	28 32	34 38	
S		1107 0	S2			55 220	
S		1370	S2			82 220	
S							NOTE 407 well
							brecciated throughout silica
							fragments ± 2x2", fragments
							in turn are veined with pyr
							chalco - S_2 measurements
							meaningless.
S		2170	PS2	R		78 220	
S		2270	PS2	S		65 220	
S		2300	PS2	Z		68 220	
S		2360	PS2	S		60 220	NOTE: FOR THIS HOLE
S		2570	PS2			70 220	ALL SYMMETRY ~~OF~~ DETERMINATIONS
S		2770	PS2	Z		68 220	ARE POINT RECORDINGS.
S		2870	PS2	Z		66 220	BECAUSE OF ROCK TYPE &
S		3020	PS2			55 220	PREVASIVE S2 REGIONAL
S		3230	PS2	Z		60 220	BREAKOUTS WERE IMPOSSIBLE
S		337	PS2	S		73 220	
S		3480	PS2	D		60 220	11 SYMM. DETERMIN. MADE.
S		3530	PS2	S		65 220	
S		3630	PS2	Z		67 220	28
S		3790	PS2			65 220	56
S		3890	PS2	Z		65 220	120
S		4040	PS2			62 220	20
S		4200	PS2			70 220	320
S		4370	PS2	R		70 220	15
							335
							-94
							241

DDH V-63-R (2 / 8)

Cyprus Anvil Mining Corp.
Geochemical Log (Sampler's Copy)

Logged By: MM

Sampled By:

Code	From	To	Sample No.	Description		
1	10 14	16 20	22 27	UNIT	LENGTH	REC.
P	1940	1990	V1 110712	4EO	5.0	4.4
P	1990	1040	V1 110713	4EO	5.0	4.3
P	1040	1100	V1 110714	4G4	6.0	3.0
P	1100	1170	V1 110715	4JL	7.0	2.0
P	1170	1220	V1 110716	4J/4C:	5.0	4.4
P	1220	1270	1 110717	4C7	5.0	4.4
P	1270	1320	V1 110718	4C7	5.0	4.2
P	1320	1370	V1 110719	4C7	5.0	5.0
P	1370	1420	V1 110810	4C7	5.0	4.4
P	1420	1470	V1 110811	4C7	5.0	5.0
P	1470	1520	V1 110812	4C7	5.0	5.0
P	1520	1570	V1 110813	4C7	5.0	5.0
P	1570	1620	V1 110814	4C7	5.0	5.0
P	1620	1670	V1 110815	4C7	5.0	4.4
P	1670	1720	V1 110816	4C7	5.0	5.0
P	1720	1810	V1 110817	4C7	8.0	7.0
P	1810	1814	V1 110818	?	0.4	0.2
P	1814	1860	V1 110819	4C7	5.6	5.0
P	1860	1910	V1 110910	4C7	5.0	4.0
P	1910	1960	V1 110911	4C7	5.0	4.3
P	1960	2010	V1 110912	4C7	5.0	4.0
P	2010	2070	V1 110913	4C7	6.0	1.0
P	2070	2110	V1 110914	4L7	4.0	2.0
P	2110	2134	V1 110915	?	2.4	2.0
P	2134	2203	V1 110916	4L7	6.9	5.0
P	2203	2260	V1 110917	4L79	5.7	5.6
P	2260	2320	V1 110918	4L79	6.0	5.5
P	2320	2380	V1 110919	4L79	6.0	5.4
P	2380	2440	V1 111010	4L79	6.0	5.2
P	2440	2470	V1 111011	4H0	3.0	3.0
P	2470	2520	V1 111012	4L79	5.0	2.0
P	2520	2570	V1 111013	4L79	5.0	3.0

CYPRUS ANVIL MINING CORPORATION

DIAMOND DRILL CORE LOG

Hole Number: V-309

Project: VANGORDA

Location: VANGORDA PLATEAU

Claim: _____

Terr. Plane Co-ords.: _____ N

_____ E

Grid Co-ords.: _____

_____

Elevation: _____

Total Depth: 477.0

Fabric Orientation Diagram:

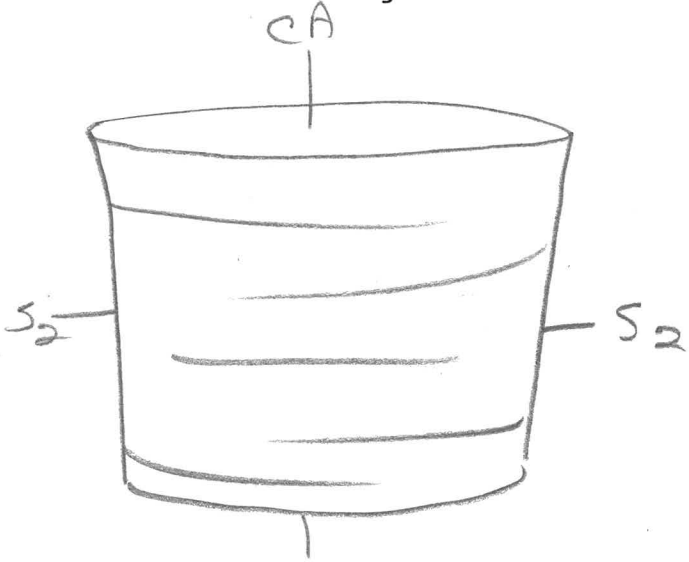

All symmetry determinations looking NW with S2 dipping SW with dip azimuth 220.

Purpose: _____

Logged by: D.J.H. Date(s) Logged: _____

Drilling Contractor: A.D.D. Core: Size From To Collar Cased and Capped: _____

_____ _____ _____

_____ _____ _____

_____ _____ _____

Started: _____ Completed: _____

Cyprus Anvil Mining Corp.

Diamond Drill Core Log

DDH V-309

Code	Drillhole	Elevation	Northing	Easting	Comments
1	2 8	10 16	17 24	25 32	34 48
T	V-309	11163.46	9031859.9	5941970.0	FEET

Code	Drillhole	Depth		Zenith Angle		True Azimuth		Comments
1	2 8	10	14	22	26	28	32	34 56
R	V-309	0	0	180.0		.		ATCOLLAR
R	V-309	119	0	176.6		356.0		
R	V-309	219	0	178.0		033.0		AC/D ZEN=177° @303'
R	V-309	329	0	174.0		065.0		AC/D ZEN=176° @387'
R	V-309	449	0	170.1		071.0		
R				.		.		
R				.		.		
R				.		.		
R				.		.		
R				.		.		
R				.		.		
R				.		.		
R				.		.		
R				.		.		
R				.		.		
R				.		.		

Code	Drillhole	Comments, Errant Remarks, Snivellings and/or Lewd Suggestions
1	2 8	10 47

DDH V-309 (2 … 8)

Cyprus Anvil Mining Corp.
Lithologic Log

Logged By: DJH.

Code	From	To	Unit	Code	Description
1	10 … 14	16 … 20	22 23	25 … 27	
L	1110	11170	11	#1	triconed - no core
L	11170	12150	12	4IK10	typical 4K w/ frags of orange carbonate
L	12150	12180	13	4IG14	
L	12180	13166	14	4IE1	breccia w/ qtzite & massive pyritic frags in a massive pyrite matrix.
L	13166	13190	15	4IA1E	breccia ; 50:50 interbanded 4A0:4E1
L	13190	14176	16	5ID0	variably calc. ; 5C component? (weakly laminated & "gritty" looking) ; brecciated?
L	14176	14336	17	4ID14	breccia ; qtzite breccia w/ mass. sde matrix
L	14336	14556	18	4IL1	breccia ; no sdes
L	14556	15162	19	4IA14	minor breccia ; 20% 4E4 interbanded
L	15162	16172	110	4IL13	minor po ; "bleached"
L	16172	17300	11	0Q0	←
L	17300	17182	12	4IG14	
L	17182	18156	13	4IL13	as unit 10
L	18156	19170	14	4IB13	minor marcasite ; minor 4L3 interbanded
L	19170	20180	15	4IE18	→ 4E86 ; w/ thin $BaSO_4$ rich lams ; minor 4G4 interbanded
L	20180	21106	16	4IH1	? w/ ~50% fine grained silica
L	21106	21230	17	4IL13	as units 10812 ; minor po
L	21230	21392	18	4IL10	minor po.
L	21392	21438	19	5ID13	
L	21438	21822	20	4IL16	minor po, py
L	21822	31137	21	4IK13	minor po
L	31137	31619	212	4IL16	minor po
L	31619	31767	213	4IL13	minor po ; grad. lower ct
L	31767	31985	214	4IA10	calcareous ; minor 5A @ upper ct
L	31985	41313	215	5IA13	minor 5D3
L	41313	41370	216	5IB10	→ 5B09 (po) ; 4L7 ? (no white mica)
L	41370	41490	217	4IC17	→ 4C79 - minor chpy.
L	41490	41676	218	4IL1	→ 4L17
L	41676	41717	219	5IB16	→ 5B67
		1E10V4			

DDH V-309 (2 . 8)

Cyprus Anvil Mining Corp.
Structural Log

Logged By: DJH.

Code	From	To	Feature	Sym	S_1 Dip Direct.	S_2 Dip Direct.	Description
	10 14	16 20	22 24	26	28 32	34 38	
S		1/1215 0	P S 12			519 2210	R region 111 – 210.5 (minor
S		1/1514 0	P S 12			810 2210	S sym. in 4L)
S		1/1714 0	P S 12			512 2210	
S		1/1915 0	P S 12			419 2210	
S		121/05	F 12	R			M region 210.5 – 264.0
S		1212/0	C S 12			513 2210	
S		1239 0	C S 12			518 2210	
S		12518 0	C S 12			71/ 2210	
S		12619 0	F 12	M			Z region 264.0 – 326.0
S		12716 0	C S 12			715 2210	
S		12916 0	C S 12			619 2210	
S		131/6 0	C S 12			612 2210	
S		13216 0	F 12	3			S region 326.0 – 376.0
S		13316 0	C S 12			616 2210	
S		13514 0	C S 12			613 2210	
S		13716 0	F 12	E		519 2210	Z region 376.0 – 419.0
S		13916 0	C S 12			519 2210	
S		141/9 0	F 12	Z		618 2210	M region 419.0 – 442.0
S		14142 0	F 12	M		715 2210	R region 442.0 – 449.0
S		14419 0	F 12	R			S region 449.0 – 467.5
S		14620 0	C S 12			71/ 2210	
S		14675	F 12	S			R region 467.5 – EOH
S		14712 0	P S 12			815 2210	
		1E101H.					

DDH V-309

Cyprus Anvil Mining Corp.

Geochemical Log (Sampler's Copy)

Logged By: DJH

Sampled By:

Code	From	To	Sample No.	Description		
1	10 14	16 20	22 27	LENGTH	UNIT	REC.
P	1/11/0	1/1/60	V1 1 17317	5.0	4KO	5'
P	1/1/60	1/121/0	V1 1 17318	5.0	4KO	5'
P	1/121/0	1/1250	V1 1 17319	4.0	4KO	4'
P	1/1250	1/1280	V1 1 17410	3.0	4G4	3'
P	1/1280	1/1320	V1 1 17411	4.0	4E1	4'
F	1/1320	1/1366	V1 1 17412	4.6	4E1	4'6"
F	1/1366	1/141/6	V1 1 17413	5.0	4AE/5D	5'
P	1/141/6	1/1456	V1 1 17414	4.0	4DL	4'
P	1/1456	1/15622	V1 1 17415	10.6	4A4	7'10"
P	1/1730	1/17182	V1 1 17416	5.2	4G4	5'2"
P	1/18156	1/1910	V1 1 17417	5.4	4B3	5'4"
P	1/1910	1/1960	V1 1 17418	5.0	4E86	5'9"
P	1/1960	1201/0	V1 1 17419	5.0	4E86	5'
P	1201/0	12018O	V1 1 17510	7.0	4E86	7'
P	12018O	12106	V1 111511	2.6	4H1	2'6"
D	13176 7	13820	V1 111512	5.0	4AO	4'4"
D	13820	13870	V1 111513	5.0	4AO	5'
P	13870	13920	V1 111514	5.0	4AO	5'
P	13920	13985	V1 111515	6.5	4AO	6'5"
P	14317O	14430	V1 111516	6.0	4C7	6'
P	14430	14490	V1 111517	6.0	4C7	6'

CYPRUS ANVIL MINING CORPORATION

DIAMOND DRILL CORE LOG

Hole Number: V-312

Project: VANGORDA

Location: VANGORDA PLATEAU

Claim: _____

Terr. Plane Co-ords.: _____ N

_____ E

Grid Co-ords.: _____

_____

Elevation: _____

Total Depth: 5460

Fabric Orientation Diagram:

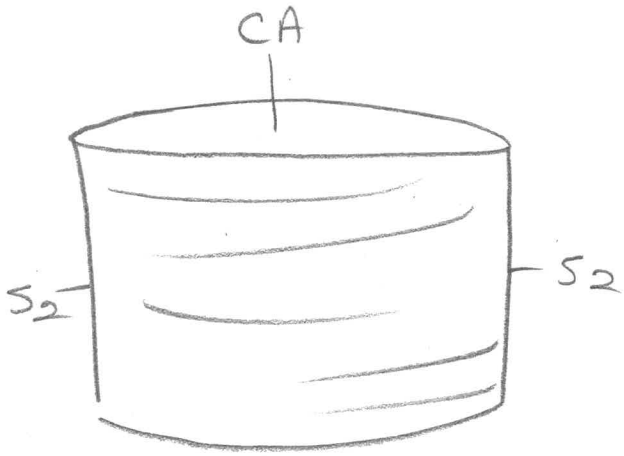

All symmetry determinations looking

NW with S2 dipping

SW with dip azimuth 220.

Purpose: _____

Logged by: JWM Date(s) Logged: _____

Drilling Contractor: A.D.D.

Core: Size From To Collar Cased and Capped: ____

_____ _____ _____

_____ _____ _____

_____ _____ _____

Started: _____ Completed: _____

Cyprus Anvil Mining Corp.
Diamond Drill Core Log

DDH V-3/12
SECT 12E.

Code	Drillhole	Elevation	Northing	Easting	Comments
1	2 8	10 16	17 24	25 32	34 48
T	V-3/12	11160.61	9031461.4	594153.1	FEET

Code	Drillhole	Depth	Zenith Angle	True Azimuth	Comments
1	2 8	10 14	22 26	28 32	34 56
R	V-3/12	0 0	180.0	.	ATCOLLAR
R	V-3/12	1218 0	179.0	009.0	
R	V-3/12	2218 0	178.0	288.0	
R	V-3/12	3218 0	177.5	103.0	AC/D ZEN=179° @307'
R	V-3/12	4218 0	171.0	101.0	
R	V-3/12	5218 0	168.0	105.0	
R		.	.	.	
R		.	.	.	
R		.	.	.	
R		.	.	.	
R		.	.	.	
R		.	.	.	
R		.	.	.	
R		.	.	.	
R		.	.	.	
R		.	.	.	

Code	Drillhole	Comments, Errant Remarks, Snivellings and/or Lewd Suggestions
1	2 8	10 47

DDH V-312 (2 8)

Cyprus Anvil Mining Corp.
Lithologic Log

Logged By: JWM

Code	From	To	Unit	Code	Description
1	10 14	16 20	22 23	25 27	
L	1 1 10 0	1 10 17 5	01	#1	TRICONED - NO CORE
L	1 10 17 5	1 11 26	02	5B 2	→ 5A6
L	1 11 26	1 11 58	03	5A 16	broken core -
L	1 11 58	1 12 10 2	04	4A 10	
L	1 12 10 2	1 12 28	05	5A 1	→ 5A9
L	1 12 28	1 13 1 0	06	4L 3	WME
L	1 13 1 0	1 13 33	07	4E 8	, 4E6 possible fault contact
					with 4L3 above.
L	1 13 33	1 13 57	08	4A 10	
L	1 13 57	1 13 70	09	4C 7	8 minor carbonaceous bands
L	1 13 70	1 13 72	10		fault gouge (clay)
L	1 13 72	1 14 20	11	4C 7	8 as in unit 9
L	1 14 20	1 14 50	12	4A 10	
L	1 14 50	1 15 42	13	4L 3	WME
L	1 15 42	1 16 28	14	5D 10	? → 4L6 tuffaceous, unlike typical
					4L6 - similar to that variant
					observed in V-49-R near footwall
					of upper horizon.
L	1 16 28	1 18 93	15	4L 10	→ 4L3 minor (trace amts of cpy) minor sericite.
L	1 18 93	1 19 02	16	4L 5	
L	1 19 02	1 22 92	17	4L 10	As in unit 15 very boring
L	1 22 92	1 23 01	18	4L 5	As in unit 16, minor 5D
L	1 23 01	1 24 60	19	4L 10	As in unit 15, 17
L	1 24 60	1 26 88	20	4L 7	As in units 15, 17, 19 - increasing po -
					increasing Chlorite, slight overall
					increase in cpy. minor calcareous
					bands as above - not broken out.
L	1 26 88	1 26 96	21	5D 3	Zebra Rock.
L	1 26 96	1 27 15	22	5B 6	/
L	1 27 15	1 27 36	23	5D 3	Zebra Rock
L	1 27 36	1 27 60	24	0 0 10	
L	1 27 60	1 30 63	25	4L 6	7/ typical greyish-green 4L6 2818-282.15D3
L	1 30 63	1 31 42	26	4L 3	
L	1 31 42	1 31 72	27	4A 10	→ 4A4
L	1 31 72	1 32 56	28	4E 8	contains 40% silica fragments to 4" sq.
					4A 1332.5 - 1333.0, overall - could be
					classed as a breccia zone.

DDH V-312

Cyprus Anvil Mining Corp.
Lithologic Log

Logged By: IWM

Code	From	To	Unit	Code	Description
1	10 14	16 20	22 23	25 27	
L	13215 6	13312 0	29	5A16	minor amts. musc.
L	13312 0	13370	30	5A16	- brecciated.
L	13370	13870	31	5A16	→5A16 typical graphitic phyllite, minor amount of sulfides (py) nothing significant - increasing carbonate content towards end of interval not 5A0
L	13870	13897	32	5A10	brecciated, dolomite.
L	13897	13920	33	4L10	Suspect strongly that this is altered 5D.
L	13920	13933	34	4DP	silica clasts present
L	13933	13955	35	4G K	8
L	13955	14232	36	5A10	slightly calcareous, noticeable increase in py content
L	14232	14242	37	5D10	calcareous
L	14242	14338	38	5A10	as in unit 36
L	14338	14508	39	4A10	Pb+Zn ≈ 4% overall, trace amts cpy.
L	14510 0	14520	40	4K10	unusual rk. type - "black" matrix which is non-magnetic graphite? sample for thin section.
L	14512 0	14615	41	4A10	Pb+Zn ≈ 1%, variably dolomitic
L	14615	14630	42	4K10	5 as in unit 40, not as massive.
L	14630	14735	43	9A K	carbonate bearing 4A, Pb+Zn ≈ 1% abundant po as opposed to py.
L	14735	14840	44	4C17	9 → 4L79, variably calcareous throughout
L	14840	14920	45	4C79	as in unit 44, less po-tific grading to 4L
L	14920	14967	46	0Q0	minor admixed carbonates.
L	14967	15350	47	4L16	/5B6 minor carbonates, extremely poor 4L6, yet not booming 5B6, if the above 4C7 was definitely 4L then would log this as 5B
L	15350	15416	48	5D6	
		EOH			EOH

2

DDH V-312 (2 – 8)

Cyprus Anvil Mining Corp.
Structural Log

Logged By: JWM

Code (1)	From (10–14)	To (16–20)	Feature (22–24)	Sym (26)	S_1 Dip Direct. (28–32)	S_2 Dip Direct. (34–38)	Description
S		1120	CS2	Z		72 220	
S		1220	PS2			78 220	
S		1270	PS2	S		70 220	
S		1320	PS2			75 220	
S		1435	PS2	3		70 220	
S		1450	PS2	S			
S		1570	PS2			75 220	
S		1670	PS2			75 220	
S		1770	PS2			80 220	
S		1970	PS2			77 220	
S		2120	PS2	R		79 220	4L
S		2170	PS2	S		80 220	
S		2350	PS2	R		74 220	4L
S		2460	PS2	S		75 220	
S		2570	PS2			70 220	
S		2770	PS2			76 220	
S		2950	PS2	R		75 220	4L
S		3070	PS2	S		76 220	
S		3150	PS2	3		70 220	
S		3170	PS2	S		78 220	
S		3370	PS2			75 220	
S		3470	PS2	R		75 220	4L, 5A + massive sulfides.
S		3620	PS2	M		75 220	340 – 346.5 skep S2 ≈ 40°
S		3680	PS2	Z		78 220	
S		3790	PS2	S		65 220	
S		3840	PS2	Z		70 220	
S		3970	PS2			85 220	
S		4070	PS2	R		55 220	
S		4110	PS2	M		64 220	
S		4220	PS2			70 220	
S		4280	PS2	R		64 220	
S		4340	PS2	S		80 220	
S		4520	PS2	R		75 220	
S		4670	PS2	S		80 220	
S		4770	PS2			80 220	
S		5050	PS2			65 220	

DDH V-312

Cyprus Anvil Mining Corp.

Structural Log

Logged By: _____

Code	From	To	Feature	Sym	S_1 Dip Direct.	S_2 Dip Direct.	Description
	10 14	16 20	22 24	26	28 32	34 38	
S		151/150	PSZ			85 2210	
S		536	PSZ			70 2210	
S		546	PSZ			60 2210	

DDH V-312 (2 – 8)

Cyprus Anvil Mining Corp.
Geochemical Log (Sampler's Copy)

Logged By: JWM
Sampled By: KM

Code	From	To	Sample No.	Description		
1	10 – 14	16 – 20	22 – 27	LENGTH	UNIT	REC
P	1158	12102	V1 1 1818	4.4	4A0	4.4
P	12102	12160	V1 1 1819	5.8	5A9	5.8
P	12160	13100	V1 1 1910	5.0	4L3	5.0
P	13100	13577	V1 1 1911	4.6	4E/A	4.6
P	13577	14100	V1 1 1912	5.3	4C7	5.3
P	14100	14500	V1 1 1913	4.0	4AC	4.0
P	31A2	31900	V1 1 191A	4.8	4A0	4.8
P	31900	32566	V1 1 1915	6.6	4E8	6.6
P	39120	39555	V1 1 1916	3.5	4DG	3.5
P	43300	A3888	V1 1 1917	5.8	4A0	5.5
P	A3888	AA400	V1 1 1918	5.2	4A0	5.2
P	44A00	45000	V1 1 1919	6.0	4A0	6.0
P	45000	45600	V1 1 2010	6.0	4AK	6.0
P	45600	A6200	V1 1 1104	6.0	4AK	6.0
P	A6200	A6800	V1 1 1105	6.0	4AK	6.0
P	A6800	A7400	V1 1 1106	6.0	4AK	6.0
P	A7400	A8100	V1 1 1107	6.0	4C79	6.0
P	A8100	A8600	V1 1 1108	6.0	4C79	6.0
P	A8600	A9200	V1 1 1109	6.0	4C79	6.0

CYPRUS ANVIL MINING CORPORATION

DIAMOND DRILL CORE LOG

Hole Number: V-322

Project: VANGORDA

Location: VANGORDA PLATEAU

Claim: _____

Terr. Plane Co-ords.: _____ N

_____ E

Grid Co-ords.: _____

_____

Elevation: _____

Fabric Orientation Diagram:

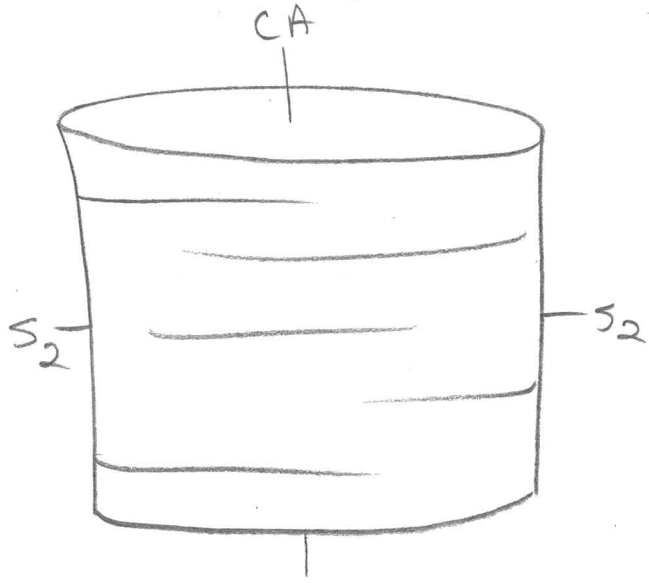

All symmetry determinations looking NW with S2 dipping SW with dip azimuth 220.

Total Depth: 377.0

Purpose: _____

Logged by: JWM Date(s) Logged: _____

Drilling Contractor: A.D.D. Core: Size From To Collar Cased and Capped: ____

_____ _____ _____

_____ _____ _____

_____ _____ _____

Started: _____ Completed: _____

Cyprus Anvil Mining Corp.
Diamond Drill Core Log

DDH V1-322
(2 – 8)

Code	Drillhole	Elevation	Northing	Easting	Comments
	2 – 8	10 – 16	17 – 24	25 – 32	34 – 48
T	V1-322	1162.62	9032626.6	594175.3	FEET

Code	Drillhole	Depth		Zenith Angle		True Azimuth		Comments
	2 – 8	10 –	14	22 –	26	28 –	32	34 – 56
R	V1-322	0	0	180.0				ATCOLLAR
R	V1-322	1590		173.7		023.0		
R	V1-322	2590		171.5		018.0		
R	V1-322	3590		169.0		053.0		
R								
R								
R								
R								
R								
R								
R								
R								
R								
R								
R								

Code	Drillhole	Comments, Errant Remarks, Snivellings and/or Lewd Suggestions
	2 – 8	10 – 47

DDH V-322 (2 8)

Cyprus Anvil Mining Corp.
Lithologic Log

Logged By: IWM

Code	From	To	Unit	Code	Description
1	10 14	16 20	22 23	25 27	
L	1100	1109	01		UNDERBURDEN
L	1109	1118	02	4E8	1 / 4C8 4E? 4M? - Volcanic Flow Facies.
L	1118	1430	03	4C9	7 overall ≤ 0.2-0.25% Cpy · as blebs + fractures.
L	1430	1600	04	4C10	→ 4C9, locally sericitic to 4C9
L	1600	1670	05	4C10	as above / lower Cu values.
L	1670	1698	06	5D10	calcareous Z.Rk.
L	1698	1770	07	4C4	4L1 chunky appearing.
L	1770	1787	08	4C7	
L	1787	1860	09	4L0	
L	1860	1987	10	4L10	calcareous 20% interbanded 5D0 Z.Rk.
L	1987	2096	11	4L10	Variably calcareous
L	2096	2198	12	4L10	6 very phyllitic, nil sulfides
L	2198	2493	13	4L3	
L	2493	2520	14	5C0	4 Fuchsite at beginning of interval.
L	2520	2560	15	5D6	4
L	2560	2720	16	4L0	/ locally to 4L3
L	2720	2875	17	4L3	
L	2875	2963	18	4L6	1
L	2963	3010	19	4L3	
L	3010	3155	20	4L6	1 / locally to 4L0, as in unit 19
					/ locally (minor) carbonates 301-307 split
L	3155	3278	21	4L3	
L	3278	3620	22	4L6	not as altered as unit 20 - increasing
					amount chlorite, less total sulfides
L	3620	3770	23	5B16	minor carbonates.
		EOH.			

DDH V-322 (2 / 8)

Cyprus Anvil Mining Corp.
Structural Log

Logged By: WM

Code	From	To	Feature	Sym	S_1 Dip Direct.	S_2 Dip Direct.	Description
1	10 14	16 20	22 24	26	28 32	34 38	
S		11150	S2			6522210	
S		12250	S2			7022210	
S		14180	S2			6022210	one Z symm. observed @ 149
S		15170	S2			5022220	
S		16720	S2	R		7022210	sulfides.
S		17140	S2	S		6022210	S region 167-174
							NOTE: PS2 generally
							throughout lok, Symm
							determinations as noted are
							only point observations to
							EOH
S		19720	PS2	S		6422210	
S		2004	PS2	Z		6522210	
S		22240	PS2	Z		7022210	
S		23330	PS2	S		7022210	
S		24220	PS2			6822220	
S		25220	PS2			7022210	
S		26220	PS2			5822210	
S		27720	PS2	S		6622210	
S		28220	PS2	S		6022210	
S		30220	PS2	S		6522210	
S		31720	PS2			5522220	
S		33720	PS2			7222210	
S		35150	PS2			6722210	
S		36170	PS2			7422210	
S		37720	PS2	P		6322210	

DDH V-322 (2 / 8)

Cyprus Anvil Mining Corp.
Geochemical Log (Sampler's Copy)

Logged By: JWM

Sampled By:

Code	From	To	Sample No.	Description			
1	10 14	16 20	22 27	UNIT	LENGTH	REC.	
P	1109 0	1140	V 3A11	4E8	5.0	5.0	
P	1140	1180	V 3AV2	4E8	4.0	4.0	
P	1180	1240	3A13	4C9	6.0	6.0	
P	1240	1300	3A14	4C9	6.0	6.0	
P	1300	1360	3A15	4C9	6.0	6.0	
P	1360	1420	3A16	4C9	6.0	6.0	
P	1420	1480	3A17	4C0	6.0	6.0	
P	1480	1540	3A18	4C0	6.0	6.0	
P	1540	1600	3A19	4C0	6.0	6.0	
P	1600	1670	3A210	4C0	6.0	6.0	
P	1698	1750	3A211	4CL	5.2	5.2	
P	1750	1810	3A12R	4L0	5.0	5.0	Au, Cu only.
P	1810	1860	3A12B	4L0	6.0	5.4	" " "
P	1860	1920	3A12A	4L0	6.0	6.0	" " "

CYPRUS ANVIL MINING CORPORATION

DIAMOND DRILL CORE LOG

Hole Number: V-49-R

Project: VANGORDA

Location: VANGORDA PLATEAU

Claim: _____

Terr. Plane Co-ords.: _____ N

_____ E

Grid Co-ords.: _____

_____

Elevation: _____

Total Depth: 547.0

Fabric Orientation Diagram:

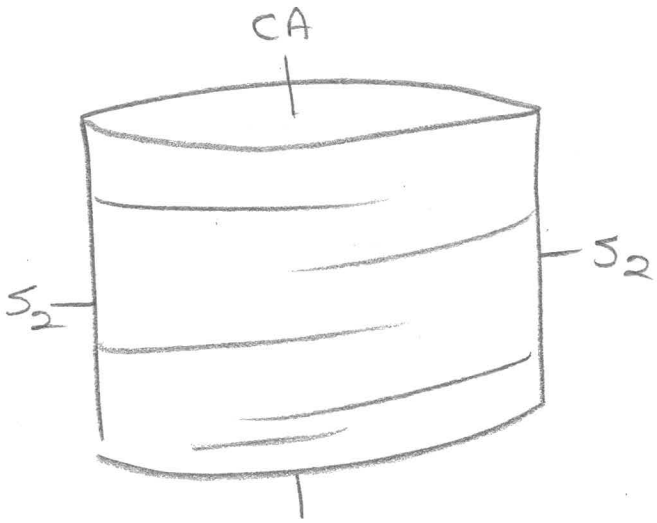

All symmetry determinations looking NW with S_2 dipping SW with dip azimuth 220.

Purpose: _____

Logged by: JWM Date(s) Logged: _____

Drilling Contractor: A.D.D.

Core: Size From To Collar Cased and Capped: ____

_____ _____ _____

_____ _____ _____

_____ _____ _____

Started: _____ Completed: _____

Cyprus Anvil Mining Corp.

Diamond Drill Core Log

DDH V-49-R

Code	Drillhole	Elevation	Northing	Easting	Comments
1	2 8	10 16	17 24	25 32	34 48
T	V-49-R	1162.62	9031666.5	594175.3	FEET

Code	Drillhole	Depth		Zenith Angle		True Azimuth		Comments
1	2 8	10	14	22	26	28	32	34 56
R	V-49-R	0	0	180.0		.		ATCOLLAR
R	V-49-R	139	0	175.3		049.0		AC/D ZEN=179° @126'
R	V-49-R	329	0	173.2		071.0		AC/D ZEN=177° @255'
R	V-49-R	429	0	169.7		079.0		AC/D ZEN=175° @386'
R	V-49-R	529	0	166.0		086.0		AC/D ZEN=172° @547'
R				.		.		
R				.		.		
R				.		.		
R				.		.		
R				.		.		
R				.		.		
R				.		.		
R				.		.		
R				.		.		
R				.		.		
R				.		.		

Code	Drillhole	Comments, Errant Remarks, Snivellings and/or Lewd Suggestions
1	2 8	10 47

DDH V-49-R (2 / 8)

Cyprus Anvil Mining Corp.
Lithologic Log

Logged By: JWM

Code	From	To	Unit	Code	Description
1	10 14	16 20	22 23	25 27	
L	1100	1310	01		TRICONED - NO CORE
L	1310	1312	02	4E18	minor 4J - core busted + ground - difficult
					to determine lithology.
L	1312	1340	03	4L17	broken core.
L	1340	1370	04	4A10	Coved be 5A - broken core.
L	1370	1450	05	4L4	" " 137'-147' 6' Rec.
L	1450	1515	06	4E18	foliaform mag + "blebs", minor barite
					in section as well.
L	1515	1512	07	4D10	spotted texture - not banded
L	1512	1546	08	4G18	
L	1546	1710	09	4L37	
L	1710	1720	10	5D6	talcose
L	1720	1843	11	4L167	172.0 - 189.3 looks susp. like
					an altered 5D? sample at 172.6
L	1843	1863	12	5D3	Sample at 185.6
L	1863	1926	13	4L16	→ 4L3
L	1926	1962	14	5B23	
L	1962	2096	15	4L47	(3) minor amounts of chloride foliaform
					with S2
L	2096	2155	16	5B12	Variably calcareous - less than unit 16
L	2155	2232	17	4L47	
L	2232	2247	18	9910	
L	2247	2332	19	4LB3	(7)
L	2332	2360	20	5B12	minor carbonates.
L	2360	2389	21	4K13	WME
L	2389	2404	22	4K16	(46K) very minor amounts of magnetite.
L	2404	2412	23	4L13	
L	2412	2465	24	5B12	3/4L carbonaceous.
L	2465	2532	25	4L1	
L	2532	2564	26	9910	
L	2564	2612	27	4L167	
L	2612	2632	28	5D6	talcose sample at 262'.
L	2632	2760	29	4L6	(7) towards end of interval increasing
					4L3 component.
L	2760	2788	30	4L6	/4L5
L	2788	3160	31	4L3	(7) Well foliated 278.8 - 304, 304-316.

Fragmental, tectonic? well healed

DDH V-49-R (2 / 8)

Cyprus Anvil Mining Corp.
Lithologic Log

Logged By: JWM

Code	From	To	Unit	Code	Description
1	10 14	16 20	22 23	25 27	
L	3160	3170	32		Fault gouge
L	3170	3238	33	4L3	well Foliated.
L	3238	3259	34	5D3	Fuchsite present in first 0.8' of
					interval Sample at 324.
L	3259	3387	35	4L3	as in unit 33
L	3387	3590	36	4L6	greyish-green, Foliaform po
L	3590	3613	37	5D3	Spotted texture (Silimar?) to that
					Variant observed in 79-X-11 Sample.
L	3613	3695	38	4L6	⇒ 4L7 increasing po over unit 36,
					gradually to 4L3 over interval
L	3695	3782	39	4L3	
L	3782	4060	40	4A10	first 10' of interval might make it
					to ≥ 6% rest is very low grade.
					this interval contains abundant cross-
					cutting tension gashes which are filled
					with ① cpy ② py ± po ③ calcite.
					392-396 - Possibly 5A19?
L	4060	4265	41	4A10	tension gashes still present but mostly
					Filled with py.
L	4265	4280	42	4C10	
L	4280	4410	43	4A10	sulfides form foliaform bands of massive
					zones overall grade ≈ 4% comb Pb+Zn
					see sample with mixture fault blocks.
L	4410	4553	44	4C10	As in unit 42, overall lower grade.
					very tight tension gashes.
L	4553	4610	45	4A10	slight increase in cpy, po
L	4610	4627	46	4C7	
L	4627	4653	47	5A9	/4A7 not as siliceous as above.
L	4653	4795	48	4C7	/4L71
L	4795	4840	49	4L6	mottled texture, similar to that at the bottom
					of lower horizon in V-63-R

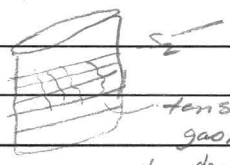

DDH V-49-R (2 / 8)

Cyprus Anvil Mining Corp.
Lithologic Log

Logged By: JWM

Code	From	To	Unit	Code	Description
1	10 14	16 20	22 23	25 27	
L	4884 0	4885	50	5D3	Zebra quitter.
L	4885	4870	51	4L5	marble lens 486.9 - 487.4
L	4870	4920	52	4L6	
L	4920	5130	53	5B6 (?)	not typically green of 5B6 - greyish with minor splashes of chlorite.
L	5130	5440	54	5B7	As in unit 53 not typical 5B? is this unit 36? greyish-green.
L	5440	5470	55	4L7	As above but much lighter in colour - drill 50' more? no - Filled Fractures. Very interesting to see a deep lake in this area?
		EOH			

DDH V-49-R (2 / 8)

Cyprus Anvil Mining Corp.
Structural Log

Logged By: JWM

Code	From	To	Feature	Sym	S_1 Dip Direct.	S_2 Dip Direct.	Description
1	10 14	16 20	22 24	26	28 32	34 38	
S		1360	PS2			68 220	
S		1530	PS2			55 220	
S		1670	PS2			82 220	
S		1770				82 220	
S		1870				7A 220	
S		1970				68 220	
S		2260				75 220	
S		2360				82 220	
S		2465				70 220	
S		2600				55 220	
S		2650				80 220	
S		2760				50 220	
S		2870	PS2	R		35 220	No sym. observed - PS2
S		2930	PS2			43 220	
S		3020	PS2	Z		55 220	
S		3160	PS2			45 220	Fault gouge 11 to S_2
S		3250	PS2			75 220	
S		3350	PS2			65 220	
S		3450	PS2			67 220	
S		3500	PS2	R		65 220	No symm. observed PS2
S		3650	PS2	S		65 220	
S		3760	PS2			68 220	Root D2 - Sunk-fold.
S		3860	PS2			80 220	
S		3910	PS2	R		77 220	
S		3930	PS2	Z			
S		A065	PS2	R		7A 220	
S		A165	PS2			68 220	
S		A225	CS2	S		70 220	
S		A360	PS2	R		76 220	
S		AA00	CS2	S		70 220	ON IND @ 436.5
S		A550	S2	R		80 220	S2 foliation, 4A+4C
S		A570	S2	S		77 220	
S		A650	PS2	Z		8A 220	
S		A770	S2			75 220	
S		A84	S2	R		68 220	
S		A970	PS2			70 220	

DDH J-49-R (2 8)

Cyprus Anvil Mining Corp.
Structural Log

Logged By: JWM

Code	From	To	Feature	Sym	S_1 Dip Direct.	S_2 Dip Direct.	Description
1	10 14	16 20	22 24	26	28 32	34 38	
S		1517 0	52			85 210	
S		1527 0	52			80 220	
S		1547 0	52	R		75 220	PS2 really

DDH V-49-R (2 / 8)

Cyprus Anvil Mining Corp.
Geochemical Log (Sampler's Copy)

Logged By: _____

Sampled By: _____

Code	From	To	Sample No.	Description		
1	10 14	16 20	22 27	UNIT	LENGTH	REC.
L	11310	11350	111164	4E/4L	5.0	5.0
L	11350	11410	111165	4A/4L	5.0	3.8
L	11410	11450	111166	4L4	✓ 5.0	2.8
L	11450	11510	✓ 111167	4E1	✓ 5.0	5.0
L	11510	11546	111168	4D/4G	✓ 4.6	4.6
L	12389	12404	111169	4K6	1.5	1.5
L	13782	13840	111170	4A0	5.8	5.8
L	13840	13890	111171	✓ 4A0	5.0	5.0
L	13890	13940	111172	✓ 4A0	5.0	5.0
L	13940	13990	111173	✓ 4A0	5.0	5.0
L	13990	14040	111174	✓ 4A0	5.0	5.0
L	14040	14090	111175	4A0	5.0	5.0
L	14090	14140	111176	4A0	5.0	5.0
L	14140	14200	111177	4A0	6.0	6.0
L	14200	14260	111178	4A0	6.0	6.0
L	14260	14320	111179	✓ 4A0	6.0	6.0
L	14320	14380	111180	✓ 4A0	6.0	6.0
L	14380	14440	111181	✓ 4A/4C	6.0	6.0
L	14440	14510	111182	4C0	6.0	6.0
L	14510	14560	111183	4C0	6.0	6.0
L	14560	14620	111184	4C/4A	6.0	6.0
L	14620	14680	111185	5A/4C	6.0	6.0
L	14680	14740	111186	4C7	6.0	6.0
L	14740	14795	111187	4C7	5.5	5.5

CYPRUS ANVIL MINING CORPORATION

DIAMOND DRILL CORE LOG

Hole Number: V-57-R

Project: VANGORDA

Location: VANGORDA PLATEAU

Claim: _____

Terr. Plane Co-ords.: _____ N

_____ E

Grid Co-ords.: _____

_____

Elevation: _____

Total Depth: 524.0

Fabric Orientation Diagram:

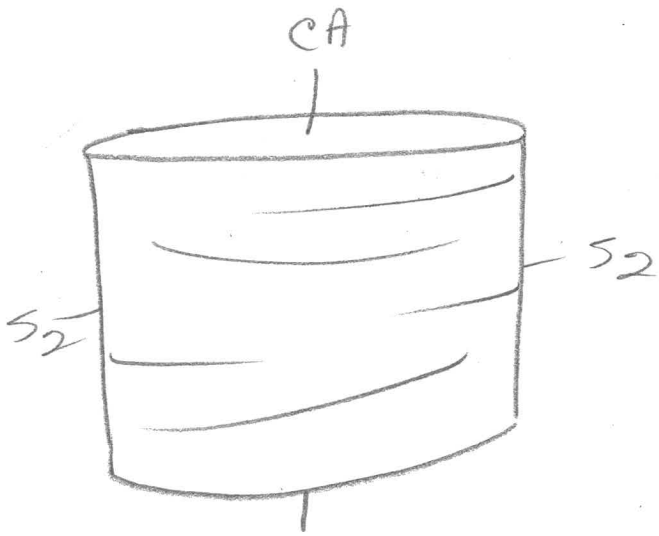

All symmetry determinations looking NW with S2 dipping SW with dip azimuth 220.

Purpose: _____

Logged by: JWM Date(s) Logged: _____

Drilling Contractor: A.D.D.

Core: Size From To Collar Cased and Capped: ____

_____ _____ _____

_____ _____ _____

_____ _____ _____

Started: _____ Completed: _____

Cyprus Anvil Mining Corp.
Diamond Drill Core Log

DDH V-57-R
2 8

Code	Drillhole	Elevation	Northing	Easting	Comments
1	2 8	10 16	17 24	25 32	34 48
T	V1-571-R1	11156.38	9031126.6	594130.2	FEET

Code	Drillhole	Depth	Zenith Angle	True Azimuth	Comments
1	2 8	10 14	22 26	28 32	34 56
R	V1-571-R1	00	1810.0	.	AT COLLAR
R	V1-571-R1	1060	1781.5	1061.0	ACID SIEN=1781° @137'
R	V1-571-R1	2060	1771.3	1571.0	
R	V1-571-R1	3560	1721.5	1451.0	ACID SIEN=1741° @337'
R	V1-571-R1	5060	1631.0	1091.0	ACID SIEN=1651° @482'
R			.	.	
R			.	.	
R			.	.	
R			.	.	
R			.	.	
R			.	.	
R			.	.	
R			.	.	
R			.	.	
R			.	.	
R			.	.	

Code	Drillhole	Comments, Errant Remarks, Snivellings and/or Lewd Suggestions
1	2 8	10 47

DDH V-57-R (2 / 8)

Cyprus Anvil Mining Corp.
Lithologic Log

Logged By: IWM

Code	From	To	Unit	Code	Description
1	10 14	16 20	22 23	25 27	
L	1100	1950	01	#	TRICONED - NO CORE
L	1950	1247	02	5B6	greyish-green very minor local development of 4L6, last 0.8' of interval 587 → 5D
L	1247	1370	03	4L7	3/4L37
L	1370	1414	04	5A9	first 1.8' brecciated to sulfides + clasts of 5A within 0.3" band sulfides.
L	1414	1434	05	4HB	4K silica clasts throughout
L	1434	1479	06	4E6	8/4K
L	1479	1547	07	4L3	7 as in unit 3
L	1547	1613	08	5A10	→ 5A9 slightly altered
L	1613	1740	09	4L10	between 4L6 + 4L3 0.05% chalco?
L	1740	1959	10	4L6	7 localized concentration of cpy to 0.08%? weak overall
L	1959	1994	11	4L10	as in unit 09
L	1994	2164	12	4L6	7 as in unit 10
L	2164	2188	13	4L6	/5D3 (Zebra) 5-10% total 5D of interval as distinct zones at 216.4; 216.6; & 217.9
L	2188	2205	14	5D3	Zebra Animal
L	2205	2330	15	4L6	local enrichment of chalco.
L	2330	2405	16	4L10	→ 4L3
L	2405	2455	17	4A10	→ 4A9 → 4A9
L	2455	2465	18	4C10	9
L	2465	2501	19	4L6	7
L	2501	2522	20	4L5	
L	2522	2770	21	4L6	very localized cpy bkbs
L	2770	2820	22	4L6	7
L	2820	2935	23	4A9	
L	2935	2958	24	4C10	→ 4D0
L	2958	2970	25	4L7	
L	2970	3020	26	5A10	
L	3020	3028	27	4E10	
L	3028	3034	28		gouge zone
L	3034	3172	29	5A9	→ 5A6 silica as thin folioform threads + very thin bounding minor pyrite → 5A9

DDH V-57-R (2 … 8)

Cyprus Anvil Mining Corp.
Lithologic Log

Logged By: JWM

Code	From	To	Unit	Code	Description
1	10 … 14	16 … 20	22 23	25 … 27	
L	131172	131176	30	5E0	
L	131176	132185	31	5A6	As in unit 29
L	132185	138877	32	5A0	"graphitic phyllite"
L	138877	139400	33	5A0	masked core
L	139400	139555	3A		Fault zone.
L	139555	141020	35	5A0	
L	141020	141030	36	4A0	
L	141030	141050	37	4CD	K
L	141050	141070	38	4E1	
L	141070	141082	39	4A0	minor carbonates
L	141082	141150	40	5A0	
L	141150	142166	41	5A3	/ 5E2
L	142166	143699	42	5A0	
L	143699	143771	43		Fault gouge
L	143771	145700	4A	5A0	
L	145700	145788	45	5D0	
L	145788	146499	46	5A0	badly broken core - possible tectonic zone?
L	146499	147388	47	4A0	
L	147388	148000	48	4L3	
L	148000	148200	49	0QD	
L	148200	148455	50	4L3	
L	148455	148655	51	5D0	Zebra striped
L	148655	149200	52	4L3	
L	149200	149700	53	4L1	/5E? marble lenses present, very chloritic
L	149700	152400	5A	5B10	→ 5B7 musc > chlorite greyish to greyish green.
		EOH			

DDH V-57-R (2 8)

Cyprus Anvil Mining Corp.
Structural Log

Logged By: JWM

Code	From	To	Feature	Sym	S_1 Dip Direct.	S_2 Dip Direct.	Description
1	10 14	16 20	22 24	26	28 32	34 38	
S		1960	CS12			710 2210	
S		11070	CS12			610 2210	
S		1170	CS12			710 2210	
S		1270	CS12			710 2210	
S		13170	CS12S			715 2210	
S		1470	S12			6P 2210	
S		15195	S12	R		7A 2210	Massive sulfides 4L
S		1735	CS12	S		810 2210	
S		18240	PS12	R		715 2210	4L
S		18184	PS12	Z		8P 2210	
S		19070	PS12			810 2210	
S		20130	PS12	R		715 2210	4L
S		20180	PS12	S		810 2210	
S		21270	PS12	R		812 2210	
S		21435	PS12	S		810 2210	
S		21520	PS12	S		812 2210	
S		21670	PS12			810 2210	
S		21770	PS12			812 2210	
S		21870	PS12	R		710 2210	
S		22970	PS12	S		8P 2210	
S		23036	PS12	R		8A 2210	
S		23170	PS12	Z		810 2210	5A
S		23270	CS12	S		715 2210	
S		23400	PS12	M		512 2210	
S		23520	PS12	S		810 2210	
S		23620	PS12	Z		715 2210	
S		23710	PS12	S		610 2210	
S		23760	PS12	Z		710 2210	
S		23845	PS12	S		610 2210	
S		23970	PS12	R		810 2210	5A
S		24020	PS12	S		710 2210	
S		24085	PS12	R		6P 2210	4E, 4A
S		24220	PS12	S		715 2210	
S		24270	PS12	M		610 2210	
S		24370	PS12			410 2210	
S		24470	PS12			710 2210	

DDH V-57-R (2 / 8)

Cyprus Anvil Mining Corp.
Structural Log

Logged By: JWM

Code	From	To	Feature	Sym	S_1 Dip Direct.	S_2 Dip Direct.	Description
1	10 14	16 20	22 24	26	28 32	34 38	
S		4560	CSZ	S		55 2210	
S		4670	CSZ	R		55 2210	possible Z Symm., one Z Symm
S		4730	CSZ	S		72 2210	Lat 457'
S		4870	PSZ			50 2210	
S		5092	PSZ	R		76 2210	
S		5104	PSZ	Z		74 2210	
S		5112	PSZ	S		65 2210	
S		5124	PSZ	R		615 2210	

DDH J-57-R (2 8)

Cyprus Anvil Mining Corp.

Geochemical Log (Sampler's Copy)

Logged By:

Sampled By: JWM

Code	From	To	Sample No.	Description		
1	10 14	16 20	22 27	UNIT	LENGTH	REC.
P	1370	1420	V1 1 2443	5A9	5.0	5.0
P	1420	1479	V1 1 2444	4HEK	5.9	5.4
P	2410 5	2455	V1 1 2445	4A0	5.0	5.2
P	2455	2465	V1 1 2446	4C9	1.0	1.0
P	2820	2870	V1 1 2447	4A9	5.0	5.0
P	2870	2935	V1 1 2448	4A9	6.5	6.5
P	2935	2958	V1 1 2449	4CD	2.3	2.3
P	4020	4082	V1 1 2510	4A-E	6.2	6.2
P	4649	4738	V1 1 3101	4A0	8.9	8.9

CYPRUS ANVIL MINING CORPORATION

DIAMOND DRILL CORE LOG

Hole Number: V-63-R

Project: VANGORDA

Location: VANGORDA PLATEAU

Claim: _____

Terr. Plane Co-ords.: _____ N

_____ E

Grid Co-ords.: _____

_____

Elevation: _____

Fabric Orientation Diagram:

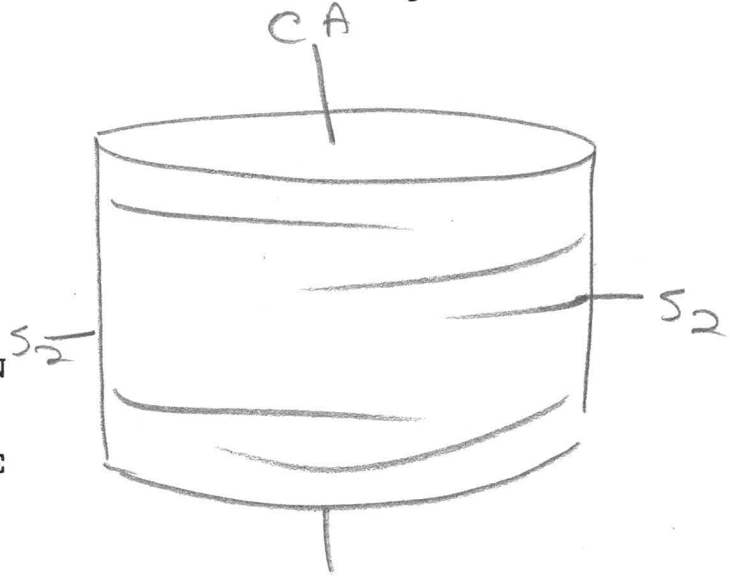

All symmetry determinations looking NW with S2 dipping SW with dip azimuth 220.

Total Depth: 4370

Purpose: _____

Logged by: JWM Date(s) Logged: _____

Drilling Contractor: A.D.D. Core: Size From To Collar Cased and Capped: _____

_____ _____ _____

_____ _____ _____

_____ _____ _____

Started: _____ Completed: _____

Cyprus Anvil Mining Corp.
Diamond Drill Core Log

DDH V-63-R
2 8

Code	Drillhole	Elevation	Northing	Easting	Comments
1	2 8	10 16	17 24	25 32	34 48
T	V-63-R	1163.93	903207.5	594220.4	FEET

Code	Drillhole	Depth	Zenith Angle	True Azimuth	Comments
1	2 8	10 14	22 26	28 32	34 56
R	V-63-R	0 0	180.0	.	AT COLLAR
R	V-63-R	119 0	178.1	289.0	ACID ZEN=179° @143'
R	V-63-R	309 0	175.2	038.0	ACID ZEN=178° @219'
R	V-63-R	419 0	170.2	098.0	ACID ZEN=177° @324'
R			.	.	ACID ZEN=169° @437'
R			.	.	
R			.	.	
R			.	.	
R			.	.	
R			.	.	
R			.	.	
R			.	.	
R			.	.	
R			.	.	
R			.	.	
R			.	.	

Code	Drillhole	Comments, Errant Remarks, Snivellings and /or Lewd Suggestions
1	2 8	10 47

DDH V-63-R (2 … 8)

Cyprus Anvil Mining Corp.
Lithologic Log

Logged By: JWM

Code	From	To	Unit	Code	Description
1	10 14	16 20	22 23	25 27	
L	1100	1940	01	#1	TRICONED - NO CORE
L	1940	10146	02	4E10	Sandy Pyrite -
L	10146	11106	03	4G10	POOR REC. 104-107' 1.6', 107-117' - 3.2' Rec
L	11106	12106	04	4J4L	(8) minor magnetite
L	12106	18000	005	4C17	large slug 4C-4L overall ≈ 20% 4L
					within 4C, po-tific throughout minor
					magnetit locally, locally 4C79 - but
					minor amounts of chalco overall -
					sulfides within 4C/4L confined to
					local zones where pyrite increases
					over short widths 1-3".
L	18100	18104	016		Fault gouge? Sulfide cuttings from
					return are in the box - suspect
					this not truly a fault zone -
					possibly just ground core -
L	18047	20700	017	4C17	as in unit 5, possibly slight
					increase in chlorite %
L	20700	21100	018	4L17	/
L	21100	21334	09		As in unit 6, this may be a fault
					zone, cannot tell conclusively
					since there is nothing but sulfide
					cuttings from the return.
L	21134	21203	110	4L17	
L	21203	23382	11	4L17	(9)> 4C7 prob 4L71
L	23382	24488	12	4L17	(9)> 4L6
L	24488	24700	13	9HO	→ clasts 4E + Silica clasts.
L	24700	25700	14	4L17	9 →4L97
L	25700	28100	15	4L43	Very punky good 4L3
L	28100	29300	16	4L16	
L	29300	29500	17	0Q0	
L	29500	32600	18	4L46	→ try for 586 but not quite minor carbonates.
L	32500	32600	19		As in unit 09/ fault zone?
L	32600	32955	210	4L17	calcareous - calc.
L	32955	33799	211	4L16	→4L3 minor carbonates.
L	33799	34700	212	4L43	
L	34700	34993	213	4L16	Carbonaceous.

DDH V-63-R

Cyprus Anvil Mining Corp.

Lithologic Log

Logged By: IWA

Code	From	To	Unit	Code	Description
1	10 14	16 20	22 23	25 27	
L	3493	3574	24	4L37	
L	3574	4116	25	4F6	minor carbonates - -
L	4116	4117	26	5D3	
L	4117	4148	27	4L6	minor carbonates 413-414 - 5D3
L	4148	4150	28	5D3	
L	4150	4370	29	4L67	increase in magnetite over above intervals.
					← calcareous prob 5B3 — 4L
		EOH			

18E

CYPRUS ANVIL MINING CORPORATION

DIAMOND DRILL CORE LOG

Hole Number: V-301

Project: VANGORDA

Location: VANGORDA PLATEAU

Claim: _____

Terr. Plane Co-ords.: _____ N

_____ E

Grid Co-ords.: _____

_____

Elevation: _____

Total Depth: 449.0

Fabric Orientation Diagram:

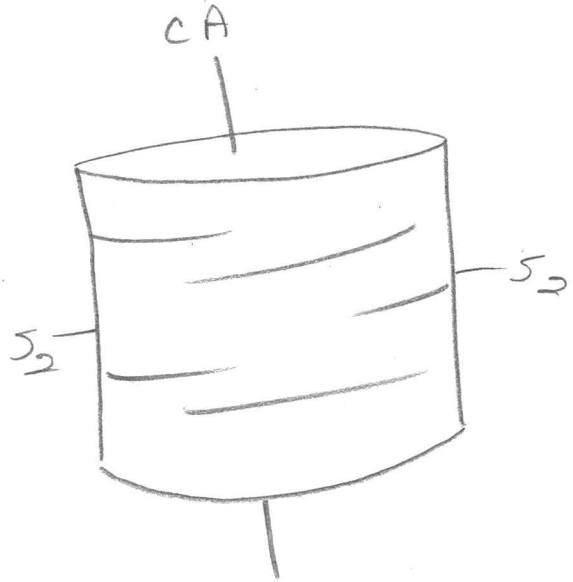

All symmetry determinations looking NW with S_2 dipping SW with dip azimuth 220.

Purpose: _____

Logged by: D.J.H. Date(s) Logged: _____

Drilling Contractor: A.D.D.

Core: Size From To Collar Cased and Capped: ____

_____ _____ _____

_____ _____ _____

_____ _____ _____

Started: _____ Completed: _____

Cyprus Anvil Mining Corp.
Diamond Drill Core Log

DDH V-301

Code	Drillhole	Elevation	Northing	Easting	Comments
	2 8	10 16	17 24	25 32	34 48
T	V-301	1143.84	902987.9	594247.9	FEET

Code	Drillhole	Depth		Zenith Angle		True Azimuth		Comments
	2 8	10	14	22	26	28	32	34 56
R	V-301	0	0	1810.	0	.		ATCOLLAR
R	V-301	41	0	1771.	5	0081.	0	SINGLE SHOT
R	V-301	191	0	1771.	8	0101.	0	SINGLE SHOT
R	V-301	221	0	1759.	0	0481.	0	SINGLE SHOT
R	V-301	300	0	1731.	0	0851.	0	GYRO SURVEY
R	V-301	351	0	1720.	0	0871.	0	SINGLE SHOT
R	V-301	449	0	1701.	0	0901.	0	SINGLE SHOT
R				.		.		
R				.		.		AC/D ZEN=1791 @110'
R				.		.		AC/D ZEN=1781 @213'
R				.		.		AC/D ZEN=1751 @311'
R				.		.		AC/D ZEN=1721 @428'
R				.		.		
R				.		.		
R				.		.		
R				.		.		

Code	Drillhole	Comments, Errant Remarks, Snivellings and/or Lewd Suggestions
	2 8	10 47

DDH V-301 (2–8)

Cyprus Anvil Mining Corp.
Lithologic Log

Logged By: DJH

Code (1)	From (10–14)	To (16–20)	Unit (22 23)	Code (25–27)	Description
L	0	335	1	#	O/B
L	335	544	2	4C4	~3-5% Pb+Zn overall - maybe some smaller
					intervals >5% ; ~10% total sdes
L	544	661	3	4L3	minor chl
L	661	726	4	4LC	40:60 interbanded 4C4:4L3 ; 4C4 is
					~2-4% Pb+Zn.
L	726	786	5	4K0	→ 4K8 & 4K86 locally ; no visible
					Pb+Zn.
L	786	792	6	5D6	altered? ; 4L6?
L	792	807	7	4E0	
L	807	818	8	5B7	→ 5B76 ; altered? 4L6? ; v. minor sdes
					(py) present.
L	818	840	9	4G8	~10%? $BaSO_4$ (4E68?)
L	840	875	10	4K0	→ 4K86 locally
L	875	883	11	4L0	
L	883	997	12	5A1	minor 4A & 4E interbands.
L	997	1062	13	4E0	→ 4E4 locally.
L	1062	1310	14	4L3	v. minor sdes (py? marc.?)
L	1310	1520	15	4L6	→ 4L67 ; minor 4L07 interbanded
L	1520	1564	16	5D3	
L	1564	1922	17	4L7	→ 4L37 locally.
L	1922	1944	18	4A0	
L	1944	1974	19	4L0	no sdes
L	1974	2009	20	4A0	
L	2009	2053	21	4K0	
L	2053	2072	22	4A0	
L	2072	2085	23	4K0	
L	2085	2103	24	4A0	
L	2103	2200	25	4K0	
L	2200	2910	26	5A1	minor 5B26 interbanded
L	2910	3090	27	5AB	interbanded 5A3 : 5B23
L	3090	3267	28	5A1	
L	3267	3287	29	4C0	
L	3287	3420	30	4L0	→ 4L7 & 4L3 locally
L	3420	4490	31	5B6	→ 5B67 ; 3G7?
		EOH.			

DDH V-3.01 (2 / 8)

Cyprus Anvil Mining Corp.
Structural Log

Logged By: DJH

Code	From	To	Feature	Sym	S_1 Dip Direct.	S_2 Dip Direct.	Description
1	10 14	16 20	22 24	26	28 32	34 38	
S		13165	CIS12			617 220	S sym 36.4 - 48.0
S		14180	IF12	S			M sym 48.0 - 61.2
S		16112	IF12	M		811 220	Z sym 61.2 - 71.0
S		17110	IF12	Z			R sym 71.0 - 81.6
S		18116	IF12	R		715 220	S sym 81.6 - 96.5
S		19615	IF12	S		615 220	R sym 96.5 - 108.0
S		110180	IF12	R			Z sym 108.0 - 169.5'
S		111170	CIS12			517 220	
S		113180	CIS12			619 220	
S		115180	CIS12			710 220	
S		116195	IF12	3			S sym 169.5 - 200.0
S		117180	CIS12			718 220	
S		120000	IF12	Z		715 220	Z sym 200.0 - 207.0'
S		120170	IF12	Z			R sym 207.0 - 220.0'
S		121200	IF12	R			S sym 220.0 - 345.7'
S		122125	CIS12			713 220	
S		124100	CIS12			412 220	
S		126100	CIS12			613 220	
S		128100	CIS12			510 220	
S		130100	CIS12			813 220	
S		132100	CIS12			710 220	
S		134100	CIS12			710 220	
S		134157	IF12	Z			Z sym 345.7 - 398.0
S		136100	CIS12			812 220	
S		138100	CIS12			719 220	
S		139810	IF12	Z		812 220	PS2 398.0 - 415.5
S		141155	IF12	P		715 220	Z sym 415.5 - 425.0
S		142150	IF12	3			S sym 425.0 - EOH
S		143140	CIS12			715 220	
S		144190	CIS12			810 220	
		EOH					

DDH V-301 (2 / 8)

Cyprus Anvil Mining Corp.
Geochemical Log (Sampler's Copy)

Logged By: DJH

Sampled By:

Code	From	To	Sample No.	Description		
1	10 14	16 20	22 27	Unit	REC.	Length
P	13135	13185	V 016511	4C4	1.2'	5.0
P	13185	14335	V 016512	4C4	4.5'	5.0
P	14335	14885	16513	4C4	4.6'	5.0
P	14885	15144	16514	4C4	6.0'	5.9
P	16161	17126	16515	4LC	6.5'	6.5
P	17126	17886	16516	4KO	6.0'	6.0
P	17886	18118	16517	5DB/4E	3.1'	3.2
P	18118	18400	16518	4G8	2.4'	2.2
P	18400	18755	16519	4KO	3.5'	3.5
P	18755	19300	16520	4L/5A	5.5'	5.5
P	19300	19977	16611	5A1	6.7'	6.7
P	19977	11016 2	16612	4EO	6.5'	6.5
P	11912 2	11917 4	16613	4LA	5.2'	5.2
P	11917 4	12100 9	16614	4AO	3.5'	3.5
P	12100 9	12105 3	16615	4KO	4 2'	4.4
P	12105 3	12110 3	16616	4AK	5.0'	5.0
P	12110 3	12120 0	16617	4KO	5.0'	9.7

CYPRUS ANVIL MINING CORPORATION

DIAMOND DRILL CORE LOG

Hole Number: V-72-R

Project: VANGORDA

Location: VANGORDA PLATEAU

Claim: _____

Terr. Plane Co-ords.: _____ N

_____ E

Grid Co-ords.: _____

_____

Elevation: _____

Total Depth: 429.0

Fabric Orientation Diagram:

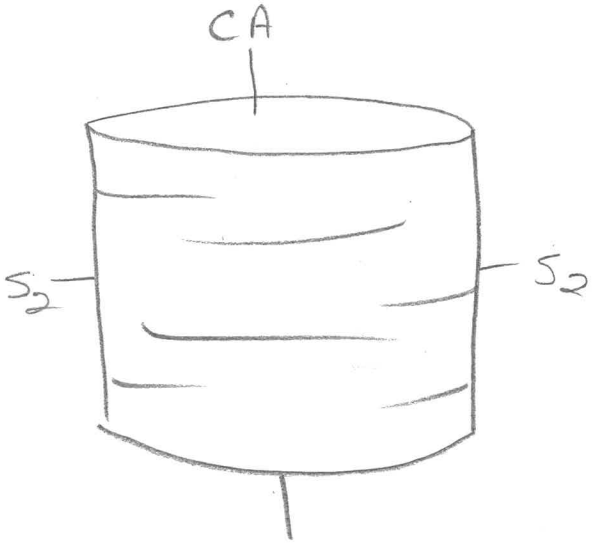

All symmetry determinations looking NW with S_2 dipping SW with dip azimuth 220.

Purpose: _____

Logged by: JWM Date(s) Logged: _____

Drilling Contractor: A.D.D.

Core: Size From To Collar Cased and Capped: ____

_____ _____ _____

_____ _____ _____

_____ _____ _____

Started: _____ Completed: _____

Cyprus Anvil Mining Corp.

Diamond Drill Core Log

DDH V-72-R

Code	Drillhole	Elevation	Northing	Easting	Comments
1	2 8	10 16	17 24	25 32	34 48
T	V-72-R	11147.19	9030271.1	5941293.4	FEET

Code	Drillhole	Depth	Zenith Angle	True Azimuth	Comments
1	2 8	10 14	22 26	28 32	34 56
R	V-72-R	0 0	180.0	.	AT COLLAR
R	V-72-R	151 0	178.0	019.0	
R	V-72-R	211 0	176.6	044.0	AC/D ZEN=178 @198'
R	V-72-R	311 0	176.0	047.0	AC/D ZEN=178 @295'
R	V-72-R	411 0	174.0	083.0	AC/D ZEN=176 @368'
R		.	.	.	AC/D ZEN=174 @428'
R		.	.	.	
R		.	.	.	WAS 174.0
R		.	.	.	WAS 172.1
R		.	.	.	
R		.	.	.	
R		.	.	.	
R		.	.	.	
R		.	.	.	
R		.	.	.	
R		.	.	.	

Code	Drillhole	Comments, Errant Remarks, Snivellings and/or Lewd Suggestions
1	2 8	10 47

DDH V-72-R (2–8)

Cyprus Anvil Mining Corp.
Lithologic Log

Logged By: JWM

Code (1)	From (10–14)	To (16–20)	Unit (22–23)	Code (25–27)	Description
L	0 0	39 0	01	#	CASING - TRICONED NO CORE
L	39 0	43 0	02	4D8	6(7) grading in+out 4D-4G slightly calcareous Pb+Zn ≈ 5-7%
L	43 0	46 5	03	4D6	8 → 4G8 Similar to unit 2 slightly greater Pb, Zn, more $BaSO_4$, variably calcareous.
L	46 5	54 7	04	4G8	(7) Pb+Zn ≈ 8-10% silica + 4L? Fragmental clasts 50-50.7
L	54 7	74 8	05	4E8	7 Variably calcareous throughout, minor interbanded 4E6 + 4F magnetite occurs as blebs + thin & seams ∥ to S_2, minor po; locally grades to 4G8
L	74 8	83 0	06	4C0	as above, less magnetite increasing cpy.
L	83 0	86 0	07	4C7	9 54.7 - 86.0 very similar rock type. -decreasing carbonates → increasing carbon.
L	86 0	88 0	08	5B6	/4L6
L	88 0	93 7	09	4L0	(3) po, minor cpy "bleached" appearence.
L	93 7	100 5	10	4L6	
L	100 5	123 0	11	4L1	3 general lack of cpy, pyrite occurs as descreet (sp?) bands of porps (secondary) general overall lack of po.
L	123 0	164 0	12	4L6	grey-green problem - generally sulfide bearing, GROT.
L	164 0	180 6	13	4L6	As in unit 12, variably clacareous.
L	180 6	210 4	14	4L6	As in unit 12 GROT.
L	210 4	235 0	15	4L6	7/9 increase in po over units 11-14, also increase in cpy. musc = chlor slightly greener than above.
L	235 0	237 0	16	4L9	7/
L	237 0	241 2	17	4E8	Pb+Zn ≈ 4%
L	241 2	242 2	18	5A0	
L	242 2	244 3	19	4A0	
L	244 3	246 4	20	4L6	alteration of 4A?
L	246 4	264 1	21	4A0	Pb+Zn ≈ 4-5% last 2' interval variably calcareous.
L	264 1	288 0	22	4Ap	Pb+Zn ≈ 2-4%
L	288 0	291 8	23	4Ep	
L	291 0	299 5	24	4Ap	

DDH V-72-R (2 8)

Cyprus Anvil Mining Corp.
Lithologic Log

Logged By: JWM

Code	From	To	Unit	Code	Description
1	10 14	16 20	22 23	25 27	
L	2885	3055	24	4L1	3 - alteration of SD?
L	3055	3330	25	4L7	GROTTY OLD 4L
L	3330	3380	26	4L7	or 4H increase in PO.
L	3380	3457	27	5D0	
L	3457	3460	28		Fault gouge.
L	3460	3600	29	5DP	
L	3600	3890	30	5B7	
L	3890	4080	31	5B6	
L	4080	4230	32	5B7	
L	4230	4290	33	5B6	
		EOH			

DDH V-72-R (2 8)

Cyprus Anvil Mining Corp.
Structural Log

Logged By: JWM

Code	From	To	Feature	Sym	S_1 Dip	S_1 Direct.	S_2 Dip	S_2 Direct.	Description
1	10 14	16 20	22 24	26	28	32	34	38	NEW STRUCTURAL LOGGING
S		450	S2				85	220	
S		555	S2				70	220	
S		680	S2				75	220	
S		780	S2	R			85	220	45-78 massive sulfides -
									No Structure, S_2 measurements
									only.
S		880	CS2				82	220	
S		103	PS2	S			78	220	Symm - difficult - due to rock type.
									4L-4A
S		1090	PS2	M			81	220	
S		1113	PS2	M			80	220	mixed E+3 region still part of
									M region
S		1156	PS2	R					No STRUCTURE observed
S		1162	PS2	M			66	220	
S		1207	PS2	M					mixed region.
S		1340	PS2				81	220	
S		1580	PS2				74	220	
S		1730	PS2	S			74	220	
S		1830	PS2				75	220	
S		1935	PS2	M			68	220	Mixed
S		2080	PS2				85	220	
S		2168	PS2	Z			80	220	
S		2360	PS2				65	220	
S		2510	CS2				75	220	
S		2730	CS2				75	220	
S		2900	PS2				80	220	
S		3030	PS2	S			75	220	
S		3280					75	220	
S		3380		R			75	220	a few sym determinations
S		3580	PS2				66	220	give S - (very few) in 4L.
S		3780	PS2				72	220	
S		3900	PS2	S			64	220	
S		4110	PS2				72	220	
S		4290	PS2	P			65	220	possible R region
									symm not seen due to
		EOH							pervasive S2

DDH V-72-R (2 8)

Cyprus Anvil Mining Corp.
Geochemical Log (Sampler's Copy)

Logged By: JWM

Sampled By:

Code	From	To	Sample No.	Description		
	10 14	16 20	22 27	REC	UNIT	LENGTH
P	39 0	43 0	29410	4.0	4D867	4.0
P	430	465	29411	3.5	4D68	3.5
P	465	505	29412	4.0	4687	4.0
P	505	547	29413	4.2	4687	4.2
P	547	600	29414	5.1	4E87	5.3
P	600	650	29415	5.0	4E87	5.0
P	650	700	29416	5.0	4E87	5.0
P	700	750	29417	4.7	4E87	4.8 (5.0)
P	750	788	29418	3.7	4C0	4.0 (3.8)
P	788	830	29419	4.2	4C0	4.2
P	830	860	29510	3.0	4C79	3.0
P	2270	2320	5417	5.0	4L6719	5.0
P	2320	2370	5418	4.9	4L9	5.0
P	2370	2412	5419	4.2	4E8	4.2
P						
P	2422	2443	5510	2.0	4A0	2.1
P	2443	2490	16415	4.6	4L6/4A0	4.7
P	2490	2540	16416	5.0	4A0	5.0
P	2540	2590	16417	4.8	4A0	5.0
P	2590	2640	16418	4.9	4A0	5.0
P	2640	2690	16419	5.0	4A0	5.0
P	2650	2740	16510	5.0	4A0	5.0
P	2740	2790	29710	4.9	4A0	5.0
P	2790	2840	29711	4.9	4A0	5.0
P	2840	2890	29712	5.0	4A0	5.0
P	2890	2940	29713	4.0	4A0/4E0	5.0
P	2940	2990	29714	5.0	4A0	5.0
P	2990	3040	29715	5.0	4L1	5.0
P	3040	3090	29716	5.0	4L7	5.0
P	3090	3140	29717	5.0	4L7	5.0
P	3330	3380	29718	5.0	4L7	5.0

20E

CYPRUS ANVIL MINING CORPORATION

DIAMOND DRILL CORE LOG

Hole Number: V-75-RH

Project: VANGORDA

Location: VANGORDA PLAT

Claim: _____

UTM Terr. Plane Co-ords.: not surveyed N

_____ E

Grid Co-ords.: BL/20E

_____

Elevation: not surveyed

Total Depth: 112.0 ft

Fabric Orientation Diagram:

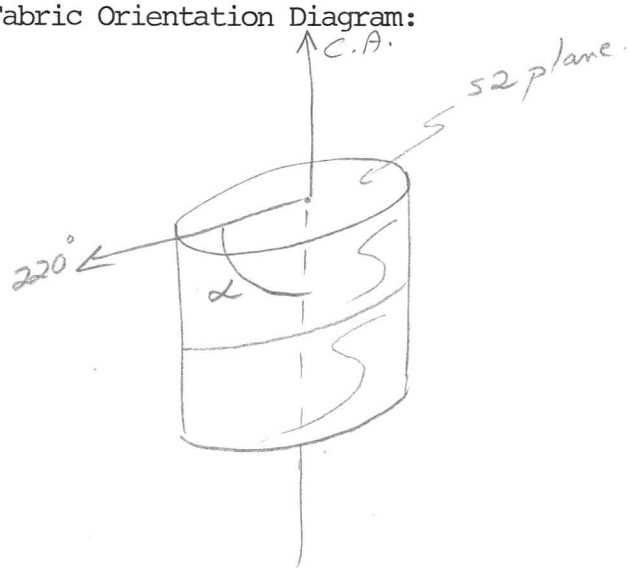

All symmetry determinations looking

NW with S2 dipping

SW with dip azimuth 220°.

Purpose: _____

Logged by: DJH Date(s) Logged: _____

Drilling Contractor: _____

Core:	Size	From	To	Collar Cased and Capped:
	_____	_____	_____	
	HQ	_____	_____	
	_____	_____	_____	

Started: _____ Completed: _____

Cyprus Anvil Mining Corp.

Diamond Drill Core Log

DDH V-75-RH

Code	Drillhole	Elevation	Northing	Easting	Comments
	2 8	10 16	17 24	25 32	34 48
T	V-75-RH	9999	9999	9999	FEET

Code	Drillhole	Depth		Zenith Angle		True Azimuth	Comments
	2 8	10 14		22 26		28 32	34 56
R	V-75-RH	0	0	180.0		.	ATCOLLAR
R				.		.	
R				.		.	
R				.		.	
R				.		.	
R				.		.	
R				.		.	
R				.		.	
R				.		.	
R				.		.	
R				.		.	
R				.		.	
R				.		.	
R				.		.	
R				.		.	
R				.		.	

Code	Drillhole	Comments, Errant Remarks, Snivellings and/or Lewd Suggestions
	2 8	10 47

DDH V-75-RH

Cyprus Anvil Mining Corp.
Lithologic Log

Logged By: DJH.

Code	From (ft)	To (ft)	Unit	Code	Description
	10 14	16 20	22 23	25 27	
L	0 0	160	1	#	tricone; no core
L	160	370	2	4LO	? heavily weathered zone; lost core (<4' recovered)
L	370	590	3	4LO	strong W.H. alt'n; talcose?; minor SI foliaform py threads; typical of alt'n halo
L	590	645	4	4G4	30-35% $BaSO_4$
L	645	703	5	4EC	80:20 4EO:4CO (minor 4A)
L	703	730	6	4EG	50:50 4EO:4G4
L	730	1040	7	4EC	~60-70% tot sdes; essentially 4C w/ bands of massive py.; minor 4A.
L	1040	1097	8	4EO	brx? w/ mass sde matrix
L	1097	1120	9	4LO	as unit 3
		EOH			

DDH V-75-RH (2 / 8)

Cyprus Anvil Mining Corp.
Structural Log

Logged By: DJH.

Code	From ft	To ft	Feature	Sym	S_1 Dip Direct.	S_2 Dip Direct.	Description
	10 14	16 20	22 24	26	28 32	34 38	
S		1180	CS12			719220	0/B - 0 - 16.0'
S		1370	CS12			615210	No sym 16.0 - 47.0
S		1470	F12	S			- poor rec & heavily
S		1500	F12	E		719210	broken core.
S		1590	F12	Z			- S2 may not be reliable
							(0/B boulders?)
							S region 47.0 - 50.0'
							Z region 50.0 - 59.0
S		1680	PS12			614210	R region (sdes) 59.0 -
S		1830	PS12			610220	109.7'
S		1030	PS12			612210	
S		10197	F12	R			PS2 region 109.7 - 112.0'
S		1120	F12	P		67220	
		E104					

DDH V-75-RH (2 / 8)

Cyprus Anvil Mining Corp.
Geochemical Log (Sampler's Copy)

Logged By: DJH

Sampled By:

Code	From ft	To ft	Sample No.	Description		
1	10 14	16 20	22 27	Length	Rec.	Unit
P	1590	1645	159171	5.5	5.5	4G4
P	1645	1703	159172	5.8	5.6	4EC
P	1703	1730	159173	2.7	2.7	4EG
P	1730	1780	159174	5.0	5.0	4EC
P	1780	1830	159175	5.0	5.0	4EC
P	1830	1880	159176	5.0	5.0	4EC
P	1880	1930	159177	5.0	5.0	4EC
P	1930	1980	159178	5.0	5.0	4EC
P	1980	2040	159179	6.0	6.0	4EC
P	2040	2097	159180	5.7	5.7	4EO

26E

CYPRUS ANVIL MINING CORPORATION

DIAMOND DRILL CORE LOG

Hole Number: V-055-R

Project: VANGORDA

Location: VANGORDA PLATEAU

Claim: _____

Terr. Plane Co-ords.: _____ N

_____ E

Grid Co-ords.: _____

_____

Elevation: _____

Total Depth: 528.0 feet.

Fabric Orientation Diagram:

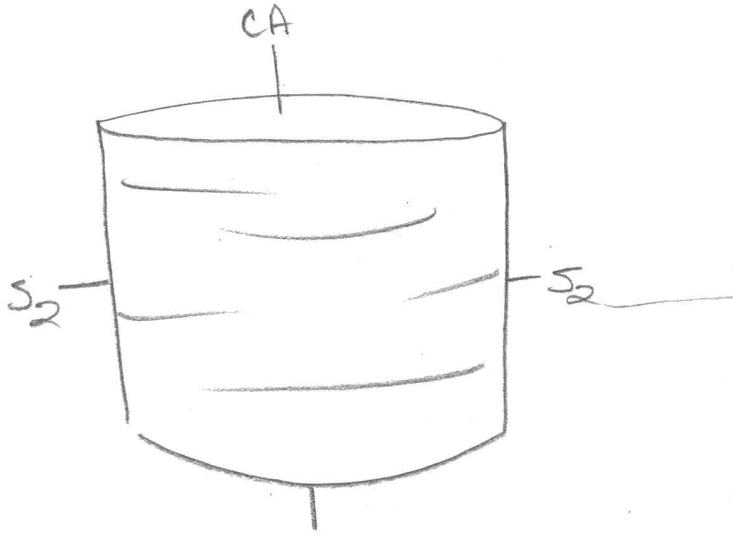

All symmetry determinations looking NW with S_2 dipping SW with dip azimuth 220°.

Purpose: _____

Logged by: D.J.H. Date(s) Logged: _____

Drilling Contractor: A.D.D

Core: Size From To Collar Cased and Capped: ____

_____ _____ _____

_____ _____ _____

_____ _____ _____

Started: _____ Completed: _____

Cyprus Anvil Mining Corp.
Diamond Drill Core Log

DDH V1-055-R

Code	Drillhole	Elevation	Northing	Easting	Comments
1	2 8	10 16	17 24	25 32	34 48
T	V1-055-R	1160.4	4902891.9	594508.8	FIELET

Code	Drillhole	Depth	Zenith Angle	True Azimuth	Comments
1	2 8	10 14	22 26	28 32	34 56
R	V1-055-R	0 0	181.0	.	ATCOLLAR
R	V1-055-R	1700	178.1	012.0	
R	V1-055-R	2100	176.0	026.0	ACID ZEIM=179° @2018'
R	V1-055-R	3300	174.0	050.0	ACID ZEIM=175° @3318'
R	V1-055-R	4700	171.7	045.0	ACID ZEIM=174° @4618'
R	V1-055-R	5100	170.8	041.0	ACID ZEIM=174° @EOH
R		.	.	.	
R		.	.	.	
R		.	.	.	
R		.	.	.	
R		.	.	.	
R		.	.	.	
R		.	.	.	
R		.	.	.	
R		.	.	.	
R		.	.	.	

Code	Drillhole	Comments, Errant Remarks, Snivellings and/or Lewd Suggestions
1	2 8	10 47

DDH V-055-R (2–8)

Cyprus Anvil Mining Corp.
Lithologic Log

Logged By: DJH.

Code (1)	From (10–14)	To (16–20)	Unit (22–23)	Code (25–27)	Description
L	00	280	1	#	triconed - no core
L	280	400	2	4E1	1.8' core recovered; lower ct.
					footage is a straight guess;
					ct is between 36' & 50' but closer
					to 36.
L	400	543	3	4C8	w/~60% total sdes; vuggy to 52'; 1.1' core, 40-50'
L	543	590	4	4D8	w/ minor $BaSO_4$ rich lams.
L	590	980	5	4C8	2% mag.; ~30-40 tot. sdes; decreasing
					sde content & increasing musc. towards
					end of int.
L	980	1052	6	4L3	strong white mica alt.; only minor sdes.
L	1052	1234	7	4L0	~10% S12 foliaform py; mod. white
					mica alt; → 4L02
L	1234	1480	8	4L0	→ 4L02; minor 4L2; ~5-10% py
L	1480	1710	9	5B7	→ 5B76; w/ 20% 4L0 interbanded.
L	1710	2028	10	4L0	→ 4L027; minor 4L2 and 4L0; ~5-10
					% py, po
L	2028	2235	11	4A0	
68.1 L	2235	2287	12	4D0	
L	2287	2510	13	4A0	→ 4A4 locally; ~~not really typical 4A~~
					~~less~~
81.8 L	2510	2685	14	4DA	70:30 4D0 : 4A0 interbanded.
L	2685	2710	15	5B7	→ 5B76; minor 4L7 interbanded;
					minor white mica alt; siliceous 4L1?
L	2710	2737	16	5D3	mottled.
L	2737	2842	17	5B7	→ 5B76; as unit 15; 4L1?
L	2842	2898	18	4L1	→ 4L17; almost 4C (very siliceous)
					~5% po; weak white mica alt.
L	2898	5280	19	5B7	→ 5B76; occas. white mica alt.
		EOH			

DDH V-05S-R (2 / 8)

Cyprus Anvil Mining Corp.
Structural Log

Logged By: DJH

Code	From	To	Feature	Sym	S_1 Dip Direct.	S_2 Dip Direct.	Description
1	10 14	16 20	22 24	26	28 32	34 38	
S		15600	PIS12			616 220	No sym. determinations
S		17466	F12	Z		618 220	(PS2 + Post D2) 28-74.6
S		18900	F12	S		717 220	Z sym 74.6 - 89.0
S		21070	F12	Z		811 220	S sym 89.0 - 107.0
S		21162	F12	S			Z sym 107.0 - 116.2
S		21280	CIS12			811 220	S sym 116.2 - 141.7
S		21417	F12	Z		815 220	Z sym 141.7 - 253.6
S		21615	CIS12			810 220	
S		21815	CIS12			810 220	
S		22030	CIS12			516 220	
S		22140	CIS12			710 220	
S		22470	CIS12			717 220	
S		22536	F12	S			S sym 253.6 - 266.6
S		22600	CIS12			816 220	
S		22666	F12	Z			Z sym 266.6 - 274.8
S		22748	F12	S			S sym 274.8 - 309.0
S		22770	CIS12			712 220	
S		22970	CIS12			719 220	
S		23090	F12	M			M region? 309.0 - 368.6
S		23180	CIS12			713 220	(This could be a Z region
S		23360	CIS12			713 220	w/ a fairly steeply dipping
S		23565	CIS12			810 220	S1 attitude) - overall
S		23686	F12	M			there is a little more
							Z than S sym here.
							S sym 368.6 - 400.0
S		23716	CIS12			815 220	
S		23915	CIS12			815 220	
S		24010	F12	Z			Z sym 400.0 - 439.0
S		24180	CIS12			617 220	
S		24390	F12	S		810 220	S sym 439.0 - ~~EOH~~ 475.5
S		24560	CIS12			718 220	
S		24755	F12	M		713 220	M region? 475.5 - EOH
S		24970	CIS12			814 220	
S		25170	CIS12			717 220	
		EOH					

DDH V-0515-R

Cyprus Anvil Mining Corp.

Geochemical Log (Sampler's Copy)

[redacted] Page 5 of 5

Logged By: [redacted] TH

Sampled By: _____

Code	From	To	Sample No.	Description		
1	10 14	16 20	22 27	REC.	Length	Unit
L	12180	14100	V1 101516 17	2'	12	4E1
L	14100	15143	V1 101516 18	5.5'	14.3	4C8
L	15143	15190	V1 101516 19	4.7'	4.7	4D8
L	15190	16140	V1 101517 10	5'	5.0	4C8
L	16140	16190	V1 101517 11	4.8'	5.0	4C8
L	16190	17140	V1 101517 12	4.9'	5.0	4C8
L	17140	17190	V1 101517 13	5'	5.0	4C8
L	17190	18140	V1 101517 14	5'	5.0	4C8
L	18140	18190	V1 101517 15	5'	5.0	4C8
L	18190	19140	V1 101517 16	5'	5.0	4C8
L	19140	19180	V1 101517 17	4'	4.0	4C8
L	12102 8	12107 8	V1 5133	5.	5.0	4A0
L	12107 8	12178	V1 5134	8.2'	10.0	4A0
L	12178	12235	V1 5136	5'	5.7	4A0
L	12235	12287	V1 5137	5'	5.2	4D0
L	12287	12337	V1 5138	5'	5.0	4A0
L	12337	12387	V1 5139	5'	5.0	4A0
L	12387	12437	V1 5140	5'	5.0	4A0
L	12437	12487	V1 5141	5'	5.0	4A0
L	12487	12510	V1 5142	2.3'	2.3	4A0
L	12510	12560	V1 5143	5'	5.0	4DA
L	12560	12610	V1 5144	5'	5.0	4DA
L	12610	12660	V1 5145	4.7'	5.0	4DA ←
L	12660	12685	V1 5146	2.5'	2.5	4DA

CYPRUS ANVIL MINING CORPORATION

DIAMOND DRILL CORE LOG

Hole Number: V-084-R

Project: VANGORDA

Location: VANGORDA PLATEAU

Claim: _____

~~Terr. Plane~~ UTM Co-ords.: 902849.886 N

594417.762 E

Grid Co-ords.: _____

_____

Elevation: 1156.705 m

Total Depth: 522.0

Fabric Orientation Diagram:

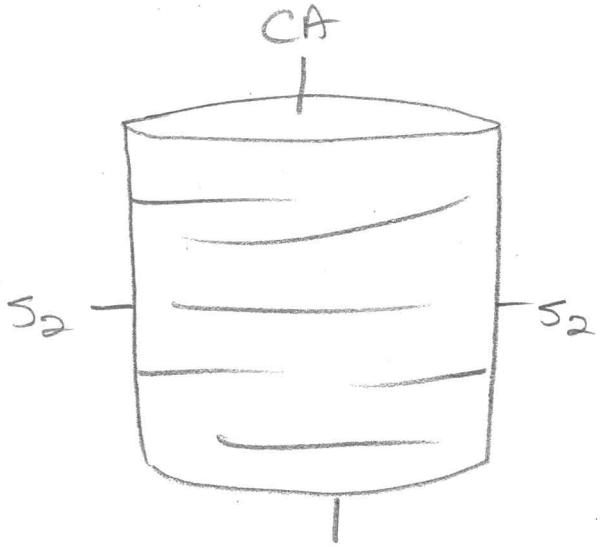

All symmetry determinations looking SW with S2 dipping NW with dip azimuth 220.

Purpose: _____

Logged by: D.J.H. Date(s) Logged: _____

Drilling Contractor: A.D.D.

Core: Size From To Collar Cased and Capped: _____

_____ _____ _____

_____ _____ _____

_____ _____ _____

Started: _____ Completed: _____

Cyprus Anvil Mining Corp.

Diamond Drill Core Log

DDH V-084-R

Code	Drillhole	Elevation	Northing	Easting	Comments
1	2 8	10 16	17 24	25 32	34 48
T	V-084-R	11156.70	9028491.9	5941461.6	FEET

Code	Drillhole	Depth	Zenith Angle	True Azimuth	Comments
1	2 8	10 14	22 26	28 32	34 56
R	V-084-R	00	180.00	045.10	AT COLLAR
R	V-084-R	680	178.50	050.10	ACID ZEN=179° @158'
R	V-084-R	1180	175.50	056.10	ACID ZEN=175° @270'
R	V-084-R	1680	173.50	072.10	ACID ZEN=176° @368'
R	V-084-R	2180	172.60	073.10	
R	V-084-R	2680	170.50	083.10	ACID ZEN=173° @478'
R		.	.	.	ACID ZEN=172° @518'
R		.	.	.	
R		.	.	.	
R		.	.	.	
R		.	.	.	
R		.	.	.	
R		.	.	.	
R		.	.	.	
R		.	.	.	
R		.	.	.	

Code	Drillhole	Comments, Errant Remarks, Snivellings and/or Lewd Suggestions
1	2 8	10 47

DDH V-08-4-R (2 / 8)

Cyprus Anvil Mining Corp.
Lithologic Log

Logged By: DJH.

Code	From	To	Unit	Code	Description
1	10 14	16 20	22 23	25 27	
L	10 0	140 0	1	1#	triconed - no core
L	140 0	152 7	2	5D16	mottled variety;
L	152 7	155 3	3	4G10	
L	155 3	169 0	4	4E1G	60:40 interbanded 4E4 : 4GO
L	169 0	176 7	5	4E10	→ 4E4 & 4F4 locally; → 4E87
L	176 7	198 1	6	4EIC	60:40 interbanded 4E8 : 4CO;
					minor Pb+Zn rich bands; ~1% Fe_3O_4
L	198 1	210 173	7	4C10	w/ minor 4LO (white mica alt.)
L	210 173	213 5	8	5A16	
L	213 5	231 72	9	4L10	weakly altered? (minor white mica devel);
L	231 72	239 20	10	4L10	→ 4L07 ; as unit 9 but with ~4% 512 foliaform PO (minor py); 4L67?
L	239 20	250 84	11	4L10	as unit 9;
L	250 84	252 88	12	4A10	
L	252 88	261 314	13	4C1E	60:40 interbanded 4C0 : 4E86;
L	261 314	261 342	14	4A10	
L	261 342	261 397	15	4G1E	50:50 interbanded 4G0 : 4E8;
					minor 4LO @ top of int.
L	261 397	262 470	16	4A14	
L	262 470	265 000	17	4G1C	50:50 interbanded 4G0 : 4C0
L	265 000	273 025	18	5A16	w/ 10% 5A3
L	273 025	273 110	19	4L13	strong white mica alt
L	273 110	273 330	20	4L10	; as unit 9;
L	273 330	283 936	21	5B17	→ 5B76; only occas. patches of white mica alt
L	283 936	294 920	22	5B17	→ 5B76; ± unaltered
L	294 920	305 005	23	5D16	as unit 2.
L	305 005	315 220	24	5B17	→ 5B76 as unit 22
		EOH			

DDH V-08-4-R (2 / 8)

Cyprus Anvil Mining Corp.
Structural Log

Logged By: DJH

Code	From	To	Feature	Sym	S_1 Dip Direct.	S_2 Dip Direct.	Description
1	10 14	16 20	22 24	26	28 32	34 38	
C							
S		14160	CIS12			814 220	Z? sym 40 - 52'
S		15120	IF12	Z			PS2 52 - 98.2
S		16160	PIS12			710 220	comp. layering // S2? in m.s.
S		1860	PIS12			65 220	" " " " " "
S		19820	IF12	Z			Z sym 98.2 - 108.5
S		110185	IF12	3		712 220	S sym 108.5 - 181.0
S		112182	CIS12			713 220	
S		114180	CIS12			710 220	
S		116150	CIS12			515 220	
S		118110	IF12	Z		618 220	Z sym 181.0 - 214.0
S		119920	CIS12			614 220	
S		121400	IF12	3		813 220	S sym 214.0 - 302.5
S		123130	CIS12			615 220	
S		125130	CIS12			711 220	
S		127130	CIS12			513 220	
S		129130	CIS12			411 220	
S		130125	IF12	Z			Z sym 302.5 - 330.5
S		131130	CIS12			810 220	
S		133105	IF12	3		712 220	S sym 330.5 - 352.0
S		135120	IF12	Z		814 220	Z sym 352 - 394
S		136180	CIS12			710 220	
S		138170	CIS12			713 220	
S		139140	IF12	Z			PS2 w/ occas. M sym
S		141060	PIS12			710 220	394.0 - 500.5
S		142160	PIS12			612 220	
S		144180	PIS12			716 220	
S		146180	PIS12			710 220	
S		148180	PIS12			815 220	
S		151005	IF12	Z			Z sym 500.5 - 522 (EOH)
		151160	CIS12			712 220	
		EOH					

DDH V-084-R (2 / 8)

Cyprus Anvil Mining Corp.

Geochemical Log (Sampler's Copy)

Logged By: [redacted]

Sampled By: _____

Code	From	To	Sample No.	Description		
1	10 14	16 20	22 27	REC.	LENGTH	UNIT
P	1512 7	1515 3	V1 101517 18	1.5'	2.6	4GO
P	1515 3	1610 3	V1 101517 19	4.6'	5.0	4EG
P	1610 3	1650	V1 101518 10	4.6'	4.7	4EG
P	1650	1690	V1 101518 11	4.0'	4.0	4EG
P	1690	1730	V1 101518 12	4.0'	4.0	4EO
P	1730	1767	V1 101518 13	3.25'	3.7	4EO
P	1767	1817	V1 101518 14	4.8'	5.0	4EC
P	1817	1867	V1 101518 15	5.0'	5.0	4EC
P	1867	1927	V1 101518 16	5.9'	6.0	4EC
P	1927	1981	V1 101518 17	5.4'	5.4	4EC
P	1981	11017 3	V1 101518 18	6.3'	9.2	4CO
P	12084	12134	V1 101518 19	5.0'	5.0	4AO
P	12134	12188	V1 101519 10	5.4'	5.4	4AO
P	12188	12238	V1 101519 11	5.0'	5.0	4CE
P	12238	12288	V1 101519 R	5.0'	5.0	4CE
P	12288	12314	V1 101519 13	2.4'	2.6	4CE
P	12314	12342	V1 101519 14	2.8'	2.8	4AO
P	12342	12397	V1 101519 15	5.5'	5.5	4GE
P	12397	12437	V1 101519 16	3.6'	4.0	4A4
P	12437	12470	V1 101519 17	3.3'	3.3	4A4
P	12470	12500	V1 101519 18	3.0'	3.0	4GC

CYPRUS ANVIL MINING CORPORATION

DIAMOND DRILL CORE LOG

Hole Number: V-101-R

Project: VANGORDA

Location: VANGORDA PLATEAU

Claim:

~~Terr. Plane~~ UTM Co-ords.: 902812.148 N

594417.762 E

Grid Co-ords.: 1

Elevation: 1152.37 metres

Total Depth: 520.0

Fabric Orientation Diagram:

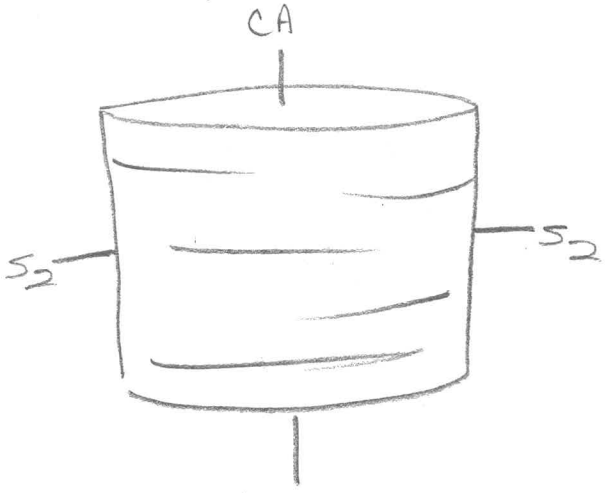

All symmetry determinations looking

NW with S2 dipping

SW with dip azimuth 220°.

Purpose:

Logged by: D.J.H Date(s) Logged:

Drilling Contractor: A.D.D.

Core: Size From To Collar Cased and Capped:

Started: Completed:

Cyprus Anvil Mining Corp.
Diamond Drill Core Log

DDH V-101-R
2 8

Code	Drillhole	Elevation	Northing	Easting	Comments
1	2 8	10 16	17 24	25 32	34 48
T	V-101-R	1152.37	902812.1	594417.7	FEET

Code	Drillhole	Depth	Zenith Angle	True Azimuth	Comments
1	2 8	10 14	22 26	28 32	34 56
R	V-101-R	0 0	180.0	.	AT COLLAR
R	V-101-R	107 0	178.0	305.0	
R	V-101-R	207 0	175.7	320.0	ACID ZEN=178 @208'
R	V-101-R	307 0	175.0	313.0	ACID ZEN=177 @300'
R	V-101-R	407 0	178.3	263.0	ACID ZEN=179 @400'
R	V-101-R	507 0	178.0	223.0	
R			.	.	
R			.	.	
R			.	.	
R			.	.	
R			.	.	
R			.	.	
R			.	.	
R			.	.	
R			.	.	
R			.	.	

Code	Drillhole	Comments, Errant Remarks, Snivellings and /or Lewd Suggestions
1	2 8	10 47

DDH V-101-R (2 / 8)

Cyprus Anvil Mining Corp.
Lithologic Log

Logged By: DJH

Code	From	To	Unit	Code	Description
1	10 14	16 20	22 23	25 27	
L	1 1 10 0	1 1420	1/	1#	triconed - no core
L	1 1420	1 1810	2	5AIO	weakly → non calc.
L	1 1810	1 1832	3	4LI/	→ 4L17; no white mica alt.
L	1 1832	1 1905	4	5AI/	- no sdes
L	1 1905	1 1984	5	4LIO	→4LP3 mod → strong white mica alt.; chl. alt?
L	1 1984	1 1992	6	4KIO	
L	1 1992	1/020	17	4LO	→ 4L07; minor white mica alt; minor Pb+Zn
L	1/020	1/0196	18	4LIO	weak → mod white mica dev.; no sdes
L	1/0196	1/2000	9	4LI/	→ 4L17; ~2% po; minor white mica alt.
L	1/2000	1/3112	10	4LIO	minor py/po bands
L	1/3112	1/7154	11	4LIO	→ 4L7 w/ minor 4L62; ~3-5% S2
	1 1 1	1 1 1	1	1 1	foliaform py/po;
L	1/7154	1/7160	12	4EI/	
L	1/7160	12129 4	13	5AIO	→ 5AI towards end of int.
L	12129 4	12340	14	4AIO	
L	12340	12354	15	4DIO	~5% Pb+Zn
L	12354	12377	16	5AIO	
L	12377	12417	17	4CIO	minor 4AO interbanded; ~30% total
	1 1 1	1 1 1	1	1 1	sdes over int; "cherty" silica 236.3-238.0
L	12417	12516	18	4AIO	
L	12516	12594	19	4C17	4L71?
L	12594	12716	210	4KI3	white mica alt; minor 4L4(sph)
L	12716	12749	21/	4K17	→ 4L71; as unit 7
L	12749	12804	212	4KIO	as unit 10
L	12804	12925	213	4LIO	→ 4L07; as unit 11
L	12925	13046	214	4LI6	→ 4L6275; quite calcareous; could be
	1 1 1	1 1 1	1	1 1	called 5D9; up to 10% py/po locally.
L	13046	13216	815	4LIO	→ 4L67; as unit 23
L	13216	13419	216	5BI6	
L	13419	13512	217	4LIO	→ 4L07; 1-2% PO
L	13512	13810	518	5BI6	
L	13810	13827	219	5BI6	garnetiferous
L	13827	13993	30	5BI6	
L	13993	14017	731/	4CI7	4L17?
L	14017	15120	0 32	5BI6	

EOH

DDH 1-101-R Cyprus Anvil Mining Corp. Page 4 of 6

Structural Log Logged By: JWM

Code	From	To	Feature	Sym	S_1 Dip Direct.	S_2 Dip Direct.	Description
	10 14	16 20	22 24	26	28 32	34 38	
S		430	CSZ			80 220	
S		550	CSZ			7K 220	1st 5' interval (43-71)
S		660	CSZ			8Z 220	broken, core NO symmetry
S		710	CSZ	S		69 220	determinations
S		780	CSZ			72 220	
S		810	CSZ	M		68 220	
S		980	CSZ	S		810 220	
S		1080		R			Sulfides + 4L wiped out any Symm.
S		1110		S			
S		1190	PSZ	M		718 220	
S		1250	PSZ			73 220	
S		1330	PSZ	S		75 220	
S		1480	PSZ	Z		76 220	
S		1560	PSZ			77 220	
S		1740	PSZ			6A 220	
		1880	PSZ			62 220	
S		1980	PSZ	S		7A 220	This region consists of 4L, 4A/SA generally difficult to determine Symm. but all S
S		2200	PSZ			710 220	
S		2320	PSZ	Z		615 220	
S		2420	PSZ			80 220	
S		2500	CSZ	R		80 220	SULFIDES - NO SYM. SEEN
S		2520	CSZ	M		85 220	CLEARLY AN M REGION UNDER
							OLD LOGGING SYSTEM —
							NO CLOSING DIRECTION SEEN.
S		2600	PSZ			65 220	~~POSSIBLE R REGION~~ - 4L difficult
S		2790	PSZ	R		76 220	to determine Symm. Probable S
S		2950	PSZ			818 220	
S		3140	PSZ			80 220	
S		3235	PSZ	S		75 220	
S		3340	PSZ	Z		85 220	
S		3540	PSZ			72 220	
S		3720	PSZ			76 220	Post DS FOLIATION BECOMING

CONTINUED

DDH V-101-R

Cyprus Anvil Mining Corp.
Structural Log

Logged By: [illegible]

Code	From (10–14)	To (16–20)	Feature (22–24)	Sym (26)	S_1 Dip Direct. (28–32)	S_2 Dip Direct. (34–38)	Description
							[illegible] D2 (S3?) 90° to
							that of S_2 @ 75°
S		3850	PS2			85 220	
S		4218	PS2			65 220	
							S3 at 453 dip 35°
							line intersection [illegible]
							is dip line of S_2 S3 [illegible]
							[illegible]
S		4580	PS2			85 220	
S		4780	PS2	S		64 220	[illegible] sym, also complex
S		4980	PS2			70 220	with interference of S3
S		5200	PS2	P		70 220	No symm [illegible], NOT DISSIMILAR
							FROM 572–478

DDH V-101-R (2 8)

Cyprus Anvil Mining Corp.
Geochemical Log (Sampler's Copy)

Logged By: DJH

Sampled By:

Code	From (10–14)	To (16–20)	Sample No. (22–27)	Description		
				Unit	REC	LENGTH
P	12129 4	12131 4 0	291331	4AO	52" - 4' 4"	4.6
P	12131 4 0	12131 9 0	291341	4CD	4'	5.0
P	12131 9 0	12141 3 0	291351	4CO	4' 4"	4.0
P	12141 3 0	12141 7 7	291361	4CO	5' 8"	4.7
P	12141 7 7	12151 2 0	291371	4AO	4.5	4.3
P	12151 2 0	12151 6 0	291381	4AO	4.5	4.0
P	12151 6 0	12151 9 4	291391	4C7	3.4	3.4

234.5 } 5AO
237.7 }

CYPRUS ANVIL MINING CORPORATION

DIAMOND DRILL CORE LOG

Hole Number: V-55-RH

Project: VANGORDA

Location: VANGORDA PLAT

Claim: _____

UTM ~~Terr.~~ Plane Co-ords.: not surveyed N

_____ E

Grid Co-ords.: 2N/26E

_____

Elevation: N.S.

Total Depth: 25.5 m

Fabric Orientation Diagram:

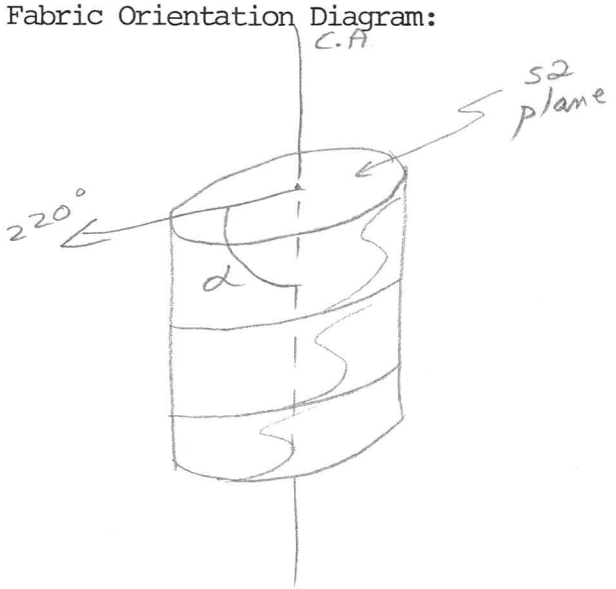

All symmetry determinations looking

NW with S2 dipping

SW with dip azimuth 220°.

Purpose: _____

Logged by: DTH Date(s) Logged: _____

Drilling Contractor: _____

Core: Size From To Collar Cased and Capped: ____

_____ _____ _____

HQ _____ _____

_____ _____ _____

Started: _____ Completed: _____

Cyprus Anvil Mining Corp.

Diamond Drill Core Log

DDH V-55-RH

Code	Drillhole	Elevation	Northing	Easting	Comments
1	2 8	10 16	17 24	25 32	34 48
T	V1-55-RH	9999	9999	9999	METERS

Code	Drillhole	Depth		Zenith Angle		True Azimuth	Comments
1	2 8	10	14	22	26	28 32	34 56
R	V1-55-RH	00		180.0			AT COLLAR
R				.		.	
R				.		.	
R				.		.	
R				.		.	
R				.		.	
R				.		.	
R				.		.	
R				.		.	
R				.		.	
R				.		.	
R				.		.	
R				.		.	
R				.		.	
R				.		.	
R				.		.	

Code	Drillhole	Comments, Errant Remarks, Snivellings and/or Lewd Suggestions
1	2 8	10 47

DDH V-55-RH

Cyprus Anvil Mining Corp.

Lithologic Log

Logged By: DJH

V-55-R HQ

Code	From m (10–14)	To m (16–20)	Unit (22 23)	Code (25 27)	Description
L	100	129	11	#	tricored-no core
L	129	132	12	4C10	? qtzite frags ; v. minor sdes
L	132	138	13	4G14	
L	138	166	14	4E4	→ 4E48 ; bxia ? ; frags of qtzite (~5%) throughout ; also ~5% irreg. bull qtz patches ; heavily weathered (oxidized) to 14.2m.
L	166	183	15	4C10	w/ minor 4E4 lams. ; ~25% tot sdes
L	183	232	16	4C10	~20% tot sdes ; grad. lower ct.
L	232	255	17	4C10	~5-10% tot. sdes
		E104			

DDH V-55-RH (2 / 8)

Cyprus Anvil Mining Corp.
Structural Log

Logged By: DJH

Code	From	To (m.)	Feature	Sym	S_1 Dip Direct.	S_2 Dip Direct.	Description
	10 14	16 20	22 24	26	28 32	34 38	
S		1134	PSR			65/210	R region 12.9 - 20.0
S		1169	PSZ			71/210	
S		1200	FR	R		77/210	Z region 20.0 - 25.5
S		1230	CSZ			71/210	(some D.D. sym)
S		1255	FR	Z		79/210	
		EOH					

DDH V-55-RH

Cyprus Anvil Mining Corp.

Geochemical Log (Sampler's Copy)

Logged By: DJH

Sampled By:

Code	From m	To m	Sample No.	Description		
1	10 14	16 20	22 27	Length	Rec.	Unit.
P	1129	1132	159612	0.3	0.3	4CO
P	1132	1138	159613	0.6	0.6	4G4
P	1138	1150	159614	1.2	1.2	4E4
P	1150	1166	159615	1.6	1.6	4E4
P	1166	1183	159616	1.7	1.7	4CO/minor 4E4
P	1183	1203	159617	2.0	2.0	4CO
P	1203	1223	159618	2.0	2.0	4CO
P	1223	1243	159619	2.0	2.0	4CO
P	1243	1255	159710	1.2	1.2	4CO

CYPRUS ANVIL MINING CORPORATION

DIAMOND DRILL CORE LOG

Hole Number: V-118-R

Project: VANGORDA

Location: VANGORDA PLAT

Claim: _____

UTM ~~Terr. Plane~~ Co-ords.: 902880.191 N

594484.194 E

Grid Co-ords.: 26E - 1N

_____

Elevation: 1159.014 m

Total Depth: 62.5 m

Fabric Orientation Diagram:

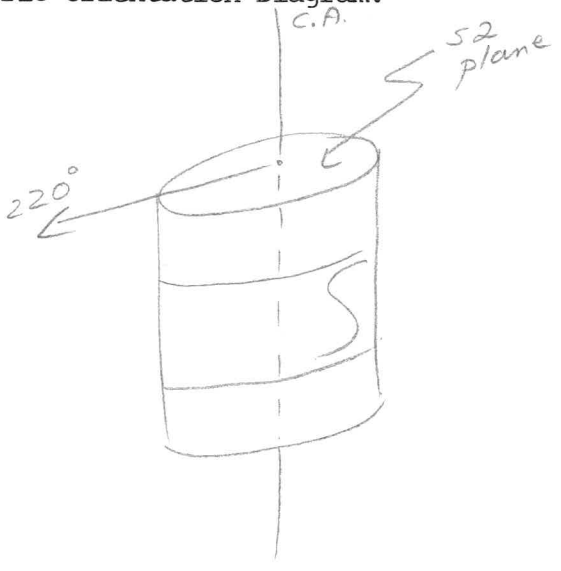

All symmetry determinations looking

NW with S2 dipping

SW with dip azimuth 220°.

Purpose: _____

Logged by: DJH Date(s) Logged: _____

Drilling Contractor: Arctic DD

Core: Size From To Collar Cased and Capped: ____

_____ _____ _____

_____ _____ _____

_____ _____ _____

Started: '80 Completed: _____

Cyprus Anvil Mining Corp.

Diamond Drill Core Log

DDH V-11-8-R

Code	Drillhole	Elevation	Northing	Easting	Comments
	2 8	10 16	17 24	25 32	34 48
T	V-11-8-R	1159.0	9028802.2	594484.2	METIERS

Code	Drillhole	Depth	Zenith Angle	True Azimuth	Comments
	2 8	10 14	22 26	28 32	34 56
R	V-11-8-R	00	180.0		AT COLLAR
R					
R					
R					
R					
R					
R					
R					
R					
R					
R					
R					
R					
R					
R					
R					

Code	Drillhole	Comments, Errant Remarks, Snivellings and/or Lewd Suggestions
	2 8	10 47

DDH V-118-R

Cyprus Anvil Mining Corp.

Lithologic Log

Page _____ of _____

Logged By: DJH

Code	From (10–14)	To (16–20)	Unit (22–23)	Code (25–27)	Description
L	00	90	1	#	triconed
L	90	126	2	4E1	w/ minor 4A & 4C bands.
L	126	222	3	4E8	→ 4E1 locally; bands & lams. of mag.
L	222	298	4	4CE	→ 4CE789; ~20% 4E8 bands;
					~60-70% tot. sde.
L	298	377	5	4C9	→ 4C798; blebs & stringers of po, chpy;
					~40-50% sdes.
L	377	390	6	4L0	strong w.M. alt'n.
L	390	410	7	4L4	→ 4L41; strong w.M. alt'n.
L	410	417	8	4L0	as unit 6
L	417	604	9	4L1	→ 4L12; weak to nil w.M. alt'n; minor
					bands 4L0 w/ strong w.M. alt'n; SiO_2 decreasing along int.
L	604	625	10	5D3	chl. rich mottles; 5C?
		EOH			(minor bands of red sph)

DDH V-11.8-R (2 / 8)

Cyprus Anvil Mining Corp.
Structural Log

Page _____ of _____

Logged By: DJH

Code	From	To	Feature	Sym	S_1 Dip Direct.	S_2 Dip Direct.	Description
	10 14	16 20	22 24	26	28 32	34 38	
S		113 3	PS12			510 2210	R region 9.0-46.7 m.
S		119 3	PS12			510 2210	
S		1254	PS12			619 2210	
S		1307	PS12			614 2210	
S		1358	PS12			710 2210	
S		1423	PS12			714 2210	
S		1467	FZ	R			D.D. region 46.7-56.4 m.
S		1473	CS12			715 2210	
S		1533	CS2			715 2210	
S		1564	FZ	D			M region 56.4-60.4
S		1580	S12			717 2210	equal S&Z
S		1604	FZ	M			
S		1625	FZ	R		710 2210	R region 60.4-62.5
		EOH					

DDH V-11-8-R (2 / 8)

Cyprus Anvil Mining Corp.
Geochemical Log (Sampler's Copy)

Page _____ of _____
Logged By: DJH
Sampled By: _____

Code	From	To	Sample No.	Description		
1	10 14	16 20	22 27	Length	Rec.	Unit
P	1 1 90	1 1106	1 159145	1.6	1.6	4E1
P	1 1106	1 1126	1 159146	2.0	2.0	4E1
P	1 1126	1 1146	1 159147	2.0	2.0	4E8
P	1 1146	1 1166	1 159148	2.0	2.0	4E8
P	1 1166	1 1186	1 159149	2.0	2.0	4E8
P	1 1186	1 1206	1 159150	2.0	2.0	4E8
P	1 1206	1 1222	1 159151	1.6	1.6	4E8
P	1 1222	1 1242	1 159152	2.0	2.0	4CE
P	1 1242	1 1262	1 159153	2.0	2.0	4CE
P	1 1262	1 1282	1 159154	2.0	2.0	4CE
P	1 1282	1 1298	1 159155	1.6	1.6	4CE
P	1 1298	1 1318	1 159156	2.0	2.0	4C9
P	1 1318	1 1338	1 159157	2.0	2.0	4C9
P	1 1338	1 1358	1 159158	2.0	2.0	4C9
P	1 1358	1 1377	1 159159	1.9	1.9	4C9
P	1 1377	1 1390	1 159160	1.3	1.3	4L0
P	1 1390	1 1410	1 159161	2.0	2.0	4L4

DUMP HOLES

CYPRUS ANVIL MINING CORPORATION

DIAMOND DRILL CORE LOG

Hole Number: 76-1

Project: VANGORDA - Relog.

Location: VANGORDA PLATEAU

Claim: _____

Terr. Plane Co-ords.: _____ N

_____ E

Grid Co-ords.: _____

_____

Elevation: _____

Total Depth: 1270.0 ft

Fabric Orientation Diagram:

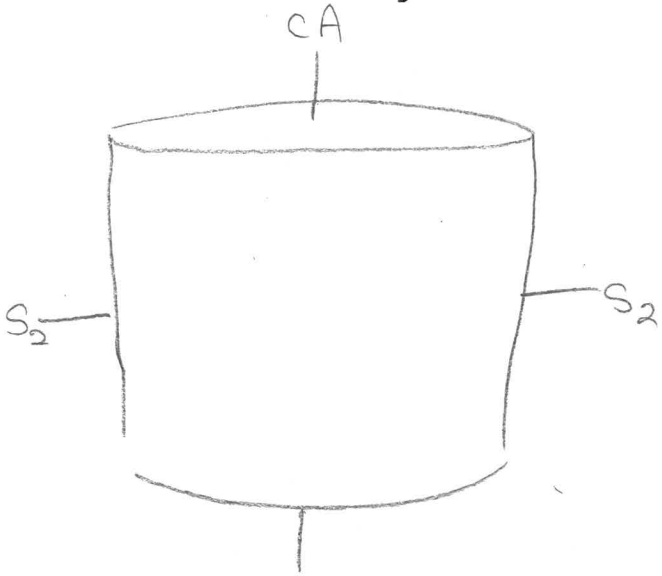

All symmetry determinations looking NW with S_2 dipping SW with dip azimuth 220.

Purpose: _____

Logged by: JWM Date(s) Logged: _____

Drilling Contractor: A.D.D. Core: Size From To Collar Cased and Capped: ____

_____ _____ _____

_____ _____ _____

_____ _____ _____

Started: _____ Completed: _____

Cyprus Anvil Mining Corp.
Diamond Drill Core Log

DDH 76-01
2 8

Code	Drillhole	Elevation	Northing	Easting	Comments
	2 8	10 16	17 24	25 32	34 4
T					

Code	Drillhole	Depth		Zenith Angle		True Azimuth	Comments
	2 8	10	14	22	26	28 32	34 5
R		0	0	.		.	ATCOLLAR
R				.		.	
R				.		.	
R				.		.	
R				.		.	
R				.		.	
R				.		.	
R				.		.	
R				.		.	
R				.		.	
R				.		.	
R				.		.	
R				.		.	
R				.		.	
R				.		.	
R				.		.	

Code	Drillhole	Comments, Errant Remarks, Snivellings and/or Lewd Suggestions
	2 8	10 4

DDH 76-1 (CNR.

Cyprus Anvil Mining Corp.
Lithologic Log

Logged By: JWM

	Code	From	To	Unit	Code	Description
	1	10 14	16 20	22 23	25 27	
	L	00	400	01		TRICONED - NO CORE
13.0	L	400	850	02	3G0	Logged as 3G0, not dissimilar from 5B6 → 4L0 as observed in Vangorda core. Seems po scattered throughout interval, possible effect of weathering here makes core truely unrecognizable.
25.9	L	850	856	03	5D6	logged as 5D - Zebra animule.
26.1	L	856	990	04	3G07	as in unit 02, tuffaceous.
30.2	L	990	1024	05	4L7	
31.2	L	1024	1060	06	5D6	As in unit 3
32.3	L	1060	1775	07	3G07	more typically 3G - distinct Volcanic component (tuffaceous looking throughout)
54.1	L	1775	1783	08	4L7	typical 4L → 4L3
54.4	L	1783	1974	09	3G0	as in unit 7, slightly altered going to 4L
60.2	L	1974	1988	10	4L0	
60.6	L	1988	1998	11	3G7	
60.9	L	1998	2030	12	4L7	
61.9	L	2030	2045	13	3G7	
62.3	L	2045	2120	14	4L7	
64.6	L	2120	2134	15	3G7	
65.0	L	2134	2220	16	4L7	
67.7	L	2220	2238	17	3G7	
68.2	L	2238	2474	18	4L7	
75.4	L	2474	2498	19	3G7	→ 4L7
						TO 249.8 LITHOLOGY very similar to that as logged in the Vangorda holes. 4L here may or may not be significant. ① depth range is within the depth from surface that sulfides are observed at Van. ② sulfides are known to occur in the vicinity of 76-1 in original P.A. drilling.

③ distinct possibility of sulfides up a down dip of 4L.

DDH 76-1 (CNR)

Cyprus Anvil Mining Corp.
Lithologic Log

Logged By: _____

	Code	From	To	Unit	Code	Description
	1	10 14	16 20	22 23	25 27	
76.1	L	2498	2640	20	3609	distinct lith. boundary at 249.8 - below 249.8 - "biotite phyllite" - very finely bonded; with chloritic zones. above 249.8 - no biotite observed + strongly volcanic component "greenish rock", below 249.8 "blackish rock"
80.5	L	2640	4134	21	3609	as in unit 20, but distinctly "wavy bonded over large intervals.
126.0	L	4134	4150	22	0900	
126.5	L	4150	4790	23	3609	As in unit 21
146.0	L	4790	4930	24	3607	distinct tuffaceous intervals within 36 - intervals on small scale (1-3") too small to begin breaking out
150.3	L	4930	5110	25	3E0	logged as 3E0 but resembles 5A, more likely 5G; not a good "phyllitic" graphitic schist minor silica seams with po+py
155.8	L	5110	5197	26	3609	
158.4	L	5197	6136	27	3609	intervals of 369, foliaform seams po throughout interval.
187.0	L	6136	6190	28	3609	minor foliaform po
188.7	L	6190	6750	29	3609	As in unit 27, also intervals of 367
205.7	L	6750	6900	30	3E0	As in unit 25 calcareous 5A?
210.3	L	6900	7630	31	3609	As in unit 29 Last 20' variably calc.
232.6	L	7630	7810	32	3609	distinct convolution cleavage. as opposed to PSZ, appears like 4A, but not a great amount of silica, minor po+py
238.1	L	7810	7898	33	3633	minor po+py
240.7	L	7898	7991	34	3609	As in unit 32
243.6	L	7991	8101	35	3633	As in unit 33
244.4	L	8101	8129	36	3699	→ 3E0 possibly 3I?
252.7	L	8129	8137	37		graphitic gouge
255.1	L	8137	8536	38	3C7	resembles 5D - definitely volcanic component within unit 3 See samples.

Sample at 853.7 (849) is typical of unit 15

DDH 76-1 (2 CNR 8)

Cyprus Anvil Mining Corp.

Lithologic Log

Logged By: _____

	Code	From	To	Unit	Code	Description
	1	10 14	16 20	22 23	25 27	
260.2	L	18536	18590	39	3E10	
261.8	L	18590	18666	40		As in unit 38, sa samples. sample at 865' is typical of interval.
264.1	L	18666	18730	41	3E10	As in unit 40
266.1	L	18730	19165	42	3G10/3D0	increasing chlorite over this interval, minor po-py
279.4	L	19165	19333	43	3D0	as in unit 42, greater % chlorite biotite rich bands distinct throughout section - resembles 3A?
284.5	L	19333	19720	44	3G10	Some minor interbanded 3D
296.3	L	19720	19833	45	3G17	(3D8)
299.6	L	19830	19885	46	3D10	As in unit 43
301.3	L	19885	19965	47	3G7	As in unit 45 (3D8)
303.7	L	19965	10109	48	3D10	As in unit 43.46
307.5	L	10109	10562	49	3D10	not as chloritic biotite & mus.
321.9	L	10562	10604	50	3D8	appears to faceous on cored surface, but ?3C? looking on fresh surface.
338.5	L	10604	10950	51	3F10	
364.2	L	10950	11010	52	3C10	Variably calcareous.
365.8	L	11010	11210	53	3F0	
369.1	L	11210	11280	54	3F0	brecciated.
374.3	L	11280	11670	55	3F0	
386.2	L	11670	11700	56	3F10	Variably calcareous, as in unit 52
						EOH?
						SUMMARY: TO 2498 good 36?
						2498 - 870 carbonaceous horizon in 36 distinctly diffferent that that above 2498. (possibly 5A? transition between 5 & 3? or between 5 & 3?)
						870 - EOH marble & silicated marbles - FOOTWALL SECTION THRU MT MYE!

DDH 76-01 (2 – 8)

KA

Cyprus Anvil Mining Corp.

Structural Log

Logged By: JWM

Code (1)	From (10–14)	To (16–20)	Feature (22–24)	Sym (26)	S_1 Dip Direct. (28–32)	S_2 Dip Direct. (34–38)	Description
		480				85	
		700				80	
		830				82	
		990				67	
		1150				55	
		1280				58	
		1420				80	
		1520				76	
		1620				70	
		1770				76	
		1970				75	
		2070				80	
		2160				80	
		2300				85	
		2410				80	
		2570				85	
		2670				80	
		2770				65	
		2870				70	
		2960				82	
		3060				65	
		3200				70	
		3390				75	
		3490				75	
		3590				80	
		3760				57	
		3970				74	
		4160				64	
		4290				85	
		4440				85	
		4620				70	
		4890				80	
		5110				70	
		5320				80	
		5580				84	
		5780				80	

DDH 76-01 (2) K-A (8)

Cyprus Anvil Mining Corp.
Structural Log

Logged By: WM

Code	From	To	Feature	Sym	S_1 Dip Direct.	S_2 Dip Direct.	Description
1	10 14	16 20	22 24	26	28 32	34 38	
		5980				75	
		6180				80	
		6380				85	
		6580				77	
		6905				80	
		7100				65	
		7400				55	
		7630				70	
		7830				65	
		8030				70	
		8290				70	
		8480				72	
		8850				60	
		9080				65	
		9310				80	
		9550				70	
		9790				70	
		10020				84	
		10240				80	
		10490				65	
		10720				85	
		10960				70	
		11190				85	
		11430				85	
		11660				67	
		11900				80	
		12070				85	
		12460				75	
		12700				78	

CYPRUS ANVIL MINING CORPORATION

DIAMOND DRILL CORE LOG

Hole Number: 79-VX-1

Project: VANGORDA

Location: VANGORDA PLATEAU

Claim: _____

Terr. Plane Co-ords.: _____ N

_____ E

VTM Grid Co-ords.: 6,903,098.3

593,824.5

Elevation: 1123.23 meters

Total Depth: 1270.0 ft.

Fabric Orientation Diagram:

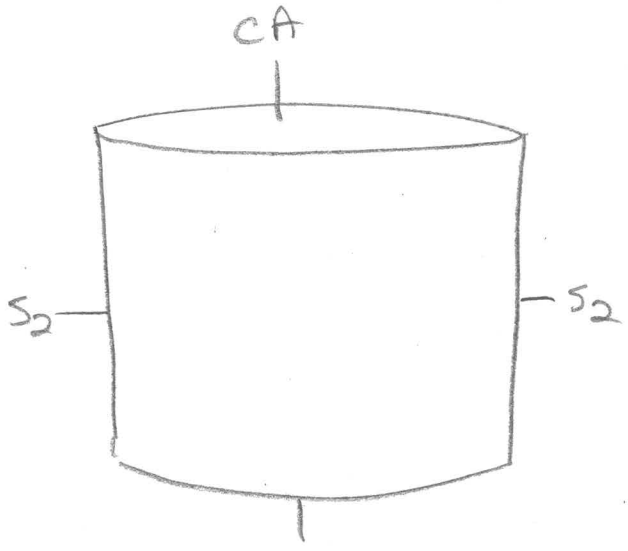

All symmetry determinations looking NW with S2 dipping SW with dip azimuth 220.

Purpose: _____

Logged by: J.W.M. Date(s) Logged: _____

Drilling Contractor: A.D.D.

Core: Size From To Collar Cased and Capped: ____

_____ _____ _____

_____ _____ _____

_____ _____ _____

Started: _____ Completed: _____

Cyprus Anvil Mining Corp.
Diamond Drill Core Log

DDH 79-VX-1
2 8

Code	Drillhole	Elevation	Northing	Easting	Comments
1	2 8	10 16	17 24	25 32	34 48
T	79-VX-1	1123.23	903098.3	593824.5	FEET

	Code	Drillhole	Depth	Zenith Angle	True Azimuth	Comments
	1	2 8	10 14	22 26	28 32	34 56
	R	79-VX-1	0 0	180.0	.	AT COLLAR
195.7	R	79-VX-1	642 0	164.3	051.0	
256.6	R	79-VX-1	842 0	154.5	050.0	
317.6	R	79-VX-1	1042 0	144.0	043.0	
364.9	R	79-VX-1	1197 0	140.5	063.0	
378.6	R	79-VX-1	1242 0	136.0	048.0	
	R			.	.	
	R			.	.	
	R			.	.	
	R			.	.	
	R			.	.	
	R			.	.	
	R			.	.	
	R			.	.	
	R			.	.	
	R			.	.	

Code	Drillhole	Comments, Errant Remarks, Snivellings and /or Lewd Suggestions
1	2 8	10 47

DDH 79-VX-1 (2 / 8)

Cyprus Anvil Mining Corp.
Lithologic Log

Logged By: JWM

	Code	From	To	Unit	Code	Description
	1	10 14	16 20	22 23	25 27	
35.	L	1100	11150	01		TRICONED, NO CORE
41.7	L	11150	11370	02	5B26	grey phyllite - absence of chlorite.
47.8	L	11370	11570	03	5A1*	graphitic gouge - probable fault zone, where core is preserved, silica bands is abundant.
51.5	L	11570	11690	04	5A6	
52.3	L	11690	11715	05	5D10	calcareous
57.0	L	11715	11870	06	5A6	
70.4	L	11870	12310	07	5A10	Variably calcareous
70.7	L	12310	12320	08	QQ10	
78.3	L	12320	12570	09	5A10	Variably calcareous as in unit 07
82.0	L	12570	12690	10	5A3	rapid reaction with HCl. (10%) - Very calcareous
97.5	L	12690	13200	11	5A10	Variably calcareous
101.5	L	13200	13330	12	5A3	as in unit 10
104.0	L	13330	13400	13	5A9	typical "ribbon banded" texture similar to 4A, seams + threads of silica with minor sulfides. py=po ≈ 2-3% non-calc.
106.6	L	13400	13498	14	5D10	calcareous Z.Rk. not phyllitic
110.5	L	13490	13625	15	5B7	Variably calcareous
1150	L	13625	13760	16	4L5	- Sneak development of 4L, altered 587 as above. trace amounts of PO
121	L	13760	13971	17	5D10	as in unit 15, Z.Rk.
130.9	L	13971	14295	18	5D7	laminarly banded, Finely banded, minor carbonates
142.0	L	14295	14648	19	5D10	Z.Rk. as in unit 14+17
213.7	L	14648	17010	20	3G3	very calcareous throughout, minor bands carbonaceous horizons overall very homogeneous unit in this sections, minor biotitic rich intervals throughout, unit possibly is 3D8 ~~3D8~~ 3G3.

DDH 79-VX-L (2 / 8)

Cyprus Anvil Mining Corp.
Lithologic Log

Logged By: JWM

	Code	From	To	Unit	Code	Description
	1	10 14	16 20	22 23	25 27	
223.8	L	17010	17342	21	3G9	3 (3D639)? this intervals resembles 5B2 graphitic horizon within 3G?
242.5	L	17392	17955	22	3G3	9 as in unit 20, but more carbon,
242.8	L	17955	17965	23	0900	
253.0	L	17965	18300	24	3G9	3 as in unit 21, minor po+py throughout
290.6	L	18300	19535	25	3G3	carbonaceous towards beginning of interval; locally grades to 3D78 throughout especially towards end of interval. Similar to unit 22+20, generally biotitic-phyllitic
296.7	L	19535	19733	26	3D43	carbonaceous throughout.
297.0	L	19733	19745	27	3E3	Variably calcareous.
298.7	L	19745	19800	28		graphitic gouge.
317.9	L	19800	10143 0	29	3E3	Variably calcareous, very fine grained foliaform py±po ± 0.5% throughout, also as fine veinlets, typical graphitic phyllite throughout.
319.4	L	10143 0	10480	30	3D3	4 resembles 4L, but doubt it
343.3	L	10480	11262	31	3E3	as in unit 29, py>po total sulfide content ? unit 29, locally over 1-3 cm resembles 4A0 (2A0) though silica generally absent.
343.6	L	11262	11272	32	3D3	4 as in unit 30
345.6	L	11272	11340	33	3E3	as in unit 31
346.6	L	11340	11370	34	3D3	4, as in units 30, 32
353.1	L	11370	11585	35	3E0	Variably calcareous, as in unit 31
355.7	L	11585	11670	36	3D47	
359.1	L	11670	11780	37	3D3	
363.9	L	11780	11940	38	3G0	Variably calc.
369.3	L	11940	12117	39	3D8	carbonaceous
369.8	L	12117	12132	40	3H0	?
372.5	L	12132	12220	41	3D8	as in unit 39
387.1	L	12220	12700	42	3D3	EOH

DDH 79-VX-1 (2 / 8)

Cyprus Anvil Mining Corp.
Structural Log

Logged By: JWM

Code	From	To	Feature	Sym	S_1 Dip Direct.	S_2 Dip Direct.	Description
1	10 14	16 20	22 24	26	28 32	34 38	
S		1160	PSZ			75 220	R region 115.0-467.0 m.
S		1370	PSZ			50 220	w/ minor S & Z as below
S		1570	PSZ			25 210	(mainly SDBSA)
S		1670	PSZ			25 210	S symm. observed @ 162'
S		1720	PSZ			30 220	
S		1870	PSZ			20 220	
S		1970	PSZ			20 220	
S		2060	PSZ			25 220	S sym. observed @ 206
S		2116	PSZ			15 220	
S		2280	PSZ			10 220	
S		2360	PSZ			40 220	
S		2450	PSZ			05 220	
S		2550	PSZ			05 220	
S		2580	PSZ			26 210	
S		2670	PSZ			45 220	
S		2810	PSZ			45 220	Z sym. observed at 283'
S		2960	PSZ			50 210	
S		3100	PSZ			60 210	S symm. obsered at 307
S		3200	PSZ			50 220	
S		3270	PSZ			47 220	
S		3430	PSZ			65 210	
S		3530	PSZ			57 220	
S		3690	PSZ			65 210	
S		3770	PSZ			57 210	
S		3870	PSZ			65 210	
S		4100	PSZ			67 210	
S		4180	PSZ			65 210	
S		4310	PSZ			65 210	
S		4410	PSZ			70 210	
S		4670	FZ	R		80 220	PSZ regions 467.0-705.0
S		4770	PSZ			80 220	
S		4870	PSZ			80 210	
S		4970	PSZ			75 210	
S		5140	PSZ			80 210	
S		5240	PSZ			60 210	
S		5360	PSZ			70 220	

DDH 79-VX-1 (2 8)

Cyprus Anvil Mining Corp.

Structural Log

Logged By: JWM

Code	From	To	Feature	Sym	S_1 Dip Direct.	S_2 Dip Direct.	Description
1	10 14	16 20	22 24	26	28 32	34 38	
S		5520	PS2			75 220	
S		5710	PS2			60 220	
S		5810	PS2			60 220	
S		6070	PS2			70 220	
S		6170	PS2			65 220	
S		6280	PS2			62 220	
S		6420	PS2			68 220	
S		6670	PS2			55 220	
S		6770	PS2			65 220	
S		7050	F2	P		60 220	
S							
S							
S		7230	CS2			60 220	
S		7300	F2	E		72 220	S symm 705-730'
S		7390	F2	Z		65 220	Z symm 730-739
S		7550	CS2			65 220	one Z symm observed
S		7630	F2	S		75 220	at 745', S sym. 739-763
S		7750	F2	P		75 220	PS2 763-775
S		7870	CS2			70 220	S region 775.0 - 810.0
S		7970	CS2			70 220	
S		8100	F2	S		74 220	
S		8125	F2	Z			Small Z region 810.0 - 812.5
S		8280	F2	S		70 220	S region 812.5 - 828.0
S		8470	PS2			70 220	PS2 region 828.0 - 974.0
S		8670	PS2			71 220	
S		8870	PS2			66 220	
S		9070	PS2			85 220	
S		9170	PS2			70 220	
S		9370	PS2			65 220	
S		9510	PS2			62 220	
S		9740	F2	P		64 220	R region 974.0 - 1158.0
S		10000	PS2			75 220	
S		10140	PS2			73 220	
S		10230	PS2			65 220	
S		10320	PS2			10 220	Steep S2 1023 - 1032
S		10570	PS2			65 220	10°

DDH 79-VX-1 (2 / 8)

Cyprus Anvil Mining Corp.
Structural Log

Logged By: JWM

Code	From	To	Feature	Sym	S_1 Dip Direct.	S_2 Dip Direct.	Description
	10 14	16 20	22 24	26	28 32	34 38	
S		10162.0	PS2			65 210	
S		10184.0	PS2			80 220	
S		11092.0	PS2			67 220	
S		11290.0	PS2			80 210	
S		11580.0	F2R			70 220	PS2 region 1158.0 - 1175.0
S		11750.0	F2P			75 210	R region 1175.0 - 1194.0
S		11890.0	PS2			74 210	
~~S~~		~~11940~~	~~F2R~~				
S		12090.0	PS2			80 210	PS2 region 1194.0 - 1270.0
S		12220.0	PS2			80 210	
S		12460.0	PS2			78 220	
S		12700.0	F2P			80 240	
		EOH					

CYPRUS ANVIL MINING CORPORATION

DIAMOND DRILL CORE LOG

Hole Number: 79-VX-2

Project: VANGORDA

Location: VANGORDA PLATEAU

Claim: _____

UTM Terr. Plane Co-ords.: 6902649.4 N

594,239.1 E

Grid Co-ords.: _____

_____

Elevation: 1173.75 m.

Total Depth: 1397.0 kel

Fabric Orientation Diagram:

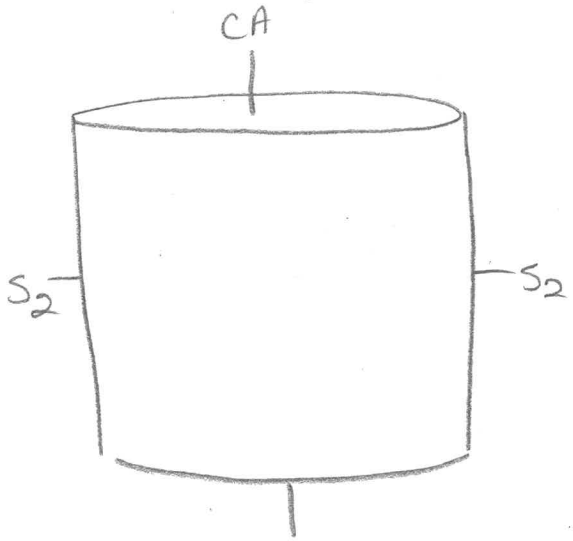

All symmetry determinations looking

NW with S_2 dipping

SW with dip azimuth 220°.

Purpose: _____

Logged by: JWM Date(s) Logged: _____

Drilling Contractor: A.D.D

Core: Size From To Collar Cased and Capped: ____

_____ _____ _____

_____ _____ _____

_____ _____ _____

Started: _____ Completed: _____

Cyprus Anvil Mining Corp.
Diamond Drill Core Log

DDH 79-VX-2

Code	Drillhole	Elevation	Northing	Easting	Comments
1	2 8	10 16	17 24	25 32	34 48
T	79-VX-2	11736.75	9026491.4	594239.1	FEET

Code	Drillhole	Depth	Zenith Angle	True Azimuth	Comments
1	2 8	10 14	22 26	28 32	34 56
R	79-VX-2	0 0	1810.0		ATCOLLAR
R	79-VX-2	1169 0	1721.2	0161.0	
R	79-VX-2	3166 0	1681.0	0158.0	
R	79-VX-2	5669 0	1651.0	0153.0	
R	79-VX-2	7669 0	1631.5	0173.0	
R	79-VX-2	9669 0	1621.0	0161.0	
R	79-VX-2	11669 0	1621.0	0168.0	
R	79-VX-2	13669 0	1591.0	0168.0	
R		.	.	.	
R		.	.	.	
R		.	.	.	
R		.	.	.	
R		.	.	.	
R		.	.	.	
R		.	.	.	
R		.	.	.	

Code	Drillhole	Comments, Errant Remarks, Snivellings and/or Lewd Suggestions
1	2 8	10 47

DDH 79-VX-2 (2 / 8)

Cyprus Anvil Mining Corp.
Lithologic Log

Logged By: JWM

	Code	From	To	Unit	Code	Description
		10 14	16 20	22 23	25 27	
	L	0000	2100	01	###	OVERBURDEN
6.4	L	2100	12402	02	5B2	increasing carbon content towards EOI, variably calcareous
37.9	L	12402	15403	03	5A0	3 not typically 5A at beginning of interval. →5B2, increasing carbonate content towards end of interval. →5A3 po present as small blebs
47.0	L	15403	20132	04	5A9	↓ variably calc. throughout, typical 5A, po ≥ py at beginning of interval increasing to po > py. typical thin seams + threads silica throughout.
61.9	L	20132	21220	05	5A3	1 As in unit 04 increasing silica & carbonate content.
67.7	L	21220	21229	06	5D0	
67.9	L	21229	21576	07	5A9	As in unit 04, po > py in seams Folia Form, blebs + crystal form. Both in this unit and 04, locally (over 1-3 mm) grades to 4A0 - possibly some Zn grades of 1-2% over these small intervals.
78.5	L	21576	21725	08	5A9	more phyllitic, generally non calc. Folia Form po, po > py.
83.1	L	21725	30132	09	5A9	As in unit 07 po >> py, po ≈ 1% total over interval.
92.4	L	30132	31140	10	5B2	po
95.7	L	31140	31213	11	5A9	as in unit 09, variably calc.
97.9	L	31213	31520	12	5BA	carbonaceous 5B po >> py, po ≈ 1% overall, 50% 5B2 throughout.
107.3	L	31520	31721	13	5B2	as in unit 12, slight increase in 5B, po >> py etc., variably calc.
113.4	L	31721	31735	14	5D3	
113.8	L	31735	41190	15	5A9	slightly "coarser grained" - not as phyllitic po >> py po ≈ 1-2% overall - larger blebs chlorite appearing as whips near end of interval.

DDH 79-VX-2 (2 … 8)

Cyprus Anvil Mining Corp.
Lithologic Log

Logged By: JWM

	Code	From	To	Unit	Code	Description
	1	10 14	16 20	22 23	25 27	
127.7	L	4190	5178	15	5B0	locally to 5B2 trace sulphides?
						generally calcareous (variable) throughout.
						chloritic development although
						pervasive is somewhat sporadic &
						localized
157.8	L	5178	5183	16	5D3	
158.0	L	5183	5454	17	5B0	As in unit 15
166.2	L	5454	5487	18	5B0	clay + gouge - probable fault zone.
167.2	L	5487	5683	19	5B0	As in unit 15, 17 - minor sulfides
						py = po ≈ 0.5%
173.2	L	5683	5703	20	5A0	graphitic gouge zone
173.8	L	5703	5815	21	5A0	→ 5B2
177.2	L	5815	7260	22	5B0	Large slug 5B minor localized
						development chlorite, variably calc.
						(not very) localy grades to 5B2
221.3	L	7260	7496	23	5A9	po > py ≈ 1% total po+py as
						foliaform generally non-calcareous.
228.5	L	7496	7820	24	5B0	→ 5B2 increasing chlorite, generally
						non-calc.
238.4	L	7820	8327	25	5A9	po>py, variably calcareous
253.8	L	8327	9190	26	5B0	2 (3G9?) as in unit 24,
						abundant, sporadic chlorite development
						sulfides: trace but po>py, variably,
						(minor) calcareous throughout.
						not distinct from any 5B
						- possibly greater C
280.1	L	9190	9199	27	0Q0	
280.4	L	9199	9444	28	5A9	3 total sulfides ≈ < 0.5?, 10-15 CO_3
						throughout Po ≈ Py (Py > Po?)
						locally goes to silicated marble
						sulfides as thin seams, fracture
						feelings, foliaform "lenses", small blebs etc.
						locally chloritic.
287.9	L	9444	9830	29	5DC	2 graphitic partings, variably calc.
						chlorite extensively developed - esp.
						along S1, trace sulfides.

DDH 79-VX-2 (2 / 8)

Cyprus Anvil Mining Corp.
Lithologic Log

Logged By: WM

	Code	From	To	Unit	Code	Description
	1	10 14	16 20	22 23	25 27	
299.6	L	19830	19952	310	5A93	as in unit 28, total sulfides 7, Po>Py, increase in chlorite
303.3	L	19952	10101 0	31	5DC	as in unit 29, abundant fine grained, foliaform Po, calcareous throughout (5B76)
305.1	L	10101 0	10317 0	32	3G68	? similar to last reported 5B - increasing graphite towards end of interval. (5B6?)
316.1	L	10317 0	10617 0	33	3CH	? Similar in composition + texture to unit 29 + 30 [5B23 w 20% 5A3]
325.2	L	10617 0	10187 0	34	3E36	[(5A3) w/ 30% 5B2]
331.3	L	10187 0	10999 4	35	3C10	→ 3CD? Similar to 5D
335.1	L	10999 4	11730	36	3E16	, variably calcareous throughout. total sulfides ≈ 0.5% at any given interval Py ≥ Po (Py > Po?) 5A0 as blebs + foliaform seams locally approaches 2A - INTERESTING INTERVAL
357.5	L	11730	11792	37	3C3	→ 3D
359.4	L	11792	12074	38	3E16	as in unit 36, less total sulfides, Po2 [5A0]
368.0	L	12074	12150	39	0Q10	
370.3	L	12150	12557	40	3E16	(5A0) As in unit 36 + 38 locally to 2A
382.7	L	12557	12618 0	41	3C10	3 w/ minor 3B5 (5C3?)
386.5	L	12618 0	12817 8	42	3E16	As in unit 40 (5A6?)
392.3	L	12817 0	12918 5	43	3D10	5/3 boundry good intervals 3D [3D4 & 3D1 50:50]
395.8	L	12918 5	13230	44	3C3	As in unit 41, zebra striped
403.3	L	13230	13614 3	44	3E16	not the same as above 3E only locally contains significant sulfides generally "structureless", "wispy"
415.7	L	13614 0	13812 0	45	3C3	As above w/ 30% 3B5
421.2	L	13812 0	13930	46	3E10	-6
424.6	L	13930	13954	47	4L3	* ← NOTE (ZL) (1D4) ← 3B54
	L	13954	13970	48	3E0	
425.3				Eb	4	DIVISION BETWEEN 36 + 5B is very ad hoc. — mainly because then isn't?

DDH 79-VX-2 (2 / 8)

Cyprus Anvil Mining Corp.
Structural Log

Logged By: IWM

Code	From	To	Feature	Sym	S_1 Dip Direct.	S_2 Dip Direct.	Description
1	10 14	16 20	22 24	26	28 32	34 38	
S		1270	CS2			610 2210	
S		1420	FZS			714 2120	S symm 21-42
S		1570	CS2			810 2210	
S		1680	FZZ			710 2210	Z region 42-68
S		1820	FZS			715 2210	S region 68-82
S		1850	FZD				D.D. 82-85
S		1970	PS2			618 2210	
S		11120	FZP			518 2210	PS2 97-112
S		11230	CS2			517 2210	S region 112 — 141.0
S		11410	FZS			615 2210	
S		11465	FZM			712 2210	M region 141.0-146.5
S		11570	FZS			515 2210	S region 146.5-157.0
S		11770	PS2			618 2210	
S		11970	PS2			715 2210	
S		12170	PS2			710 2210	
S		12250	FZP			616 2210	PS2 157.0-225.0
S		12370	CS2			710 2210	
S		12510	FZS			613 2210	S region 225.0-251.0
S		12615	PS2			515 2210	
S		12616 0	FZP			714 2210	PS2 251.0-266.0
S		12750	FZS			713 2210	266.0-275.0 S region
S		12870	PS2			810 2210	
S		12970	FZP			710 2210	PS2 275.0-297.0
S		13032	FZM				M region 297.0-303.2
S		13170	CS2			710 2210	
S		13370	CS2			718 2210	
S		13450	FZS			815 2210	S region 303.2-345.0
S		13477	FZM				M region 345.0-347.7
S		13570	CS2			813 2210	
S		13770	FZS			810 2210	S region 347.7-377.0
S		13820	FZM				M " 377.0 382.0
S		13980	FZP			715 2210	PS2 382.0-398.0
S		13995	FZZ				Z region 398-399.5
S		14080	FZP			716 2210	PS2 399.5-408.0
S		14310	FZS			710 2210	S region 408.0-430
S		14435	PS2			710 2210	

DDH 79-VX-2 (2 / 8)

Cyprus Anvil Mining Corp.
Structural Log

Logged By: JWM

Code	From	To	Feature	Sym	S_1 Dip Direct.	S_2 Dip Direct.	Description
1	10 14	16 20	22 24	26	28 32	34 38	
S		14515.0	F12	P		710 2210	PS2 430.0-455.0
S		14710.5	F12	Z		712 2210	Z region 455.0-470.5
S		14810.0	F12	M		814 2210	M " 470.5-480.0
S		14914.0	F12	P		810 2210	PS2 480.0-494.0
S		15107.0	F12	S		810 2210	S region 494.0-507.0
S		15217.0	F12	M		815 2210	M region 507.0-527.0 (PS2
S		15517.0	CS12			810 2210	
S		15685.5	F12	S		615 2210	S region 527.0-568.0 (PS2)
S		15760	F12	M			Breccia region 568.0-576.0
S		15870	F12	M		710 2210	M region 576.0-587.0
S		16070	CS12			710 2210	
S		16212.0	CS12			715 2210	
S		16320	F12	S		810 2210	S region 587.0-632.0
S		16470	PS12			810 2210	
S		16610	F12	P		714 2210	PS2 632.0-661.0
S		16770	CS12			716 2210	
S		16910.0	F12	S		710 2210	S region 661.0-690.0
S		16987	F12	P			PS2 690.0-698.7
S		17095	F12	M		810 2210	M region 698.7-709.5
S		17216.0	F12	S		515 2210	S region 709.5-726.0
S		17430	PS12			714 2210	
S		17617.0	F12	P		710 2210	PS2 726.0-767.0
S		17717.0	F12	S		510 2210	S region 767.0-777.0
S		17916.0	F12	P		710 2210	PS2 region 777.0-796.0
S		18116.0	CS12			814 2210	S region 796.0-829.2
S		18292	F12	S			PS2 region 829.2-917.0'
S		18316.0	PS12			719 2210	(minor SBZ)
S		18516.0	PS12			418 2210	
S		18716.0	PS12			716 2210	
S		18916.0	PS12			811 2210	
S		19116.0	PS12			815 2210	
S		19117.0	F12	P			S region 917.0-932.0'
S		19320	F12	Z		811 2210	Z region 932.0-935.0
S		19350	F12	Z			PS2 region 935.0-958
S		19512.0	PS12			812 2210	
S		19580	F12	P			S region 958-967.0

DDH 7J-VX-2 Cyprus Anvil Mining Corp.

2 8

Structural Log

Logged By: DJH

Code	From	To	Feature	Sym	S_1 Dip Direct.	S_2 Dip Direct.	Description
1	10 14	16 20	22 24	26	28 32	34 38	
S		9670	F2	Σ		80 220	Z region 967.0 - 983.0
S		9830	F2	Z		81 220	PS2 region 983.0 - 990.5
S		9905	F2	P			M region 990.5 - 1005
S		10020	CS2			78 220	
S		10050	F2	M			PS2 region 1005.0 - 1052
S		10220	PS2			75 220	
S		10420	PS2			73 220	
S		10520	F2	P			Z region 1052.0 - 1057.0
S		10570	F2	Z		72 220	S region 1057.0 - 1075.0
S		10750	F2	S		74 220	PS2 w/ minor R & 1 "Z"
S		10950	PS2			85 220	1075.0 - 1102.0
S		11020	F2	P			R region 1102.0 - 1214.0
S		11160	PS2			78 220	
S		11360	PS2			75 220	
S		11560	PS2			79 220	
S		11760	PS2			65 220	
S		11960	PS2			84 220	
S		12140	F2	R		82 220	Z region 1214.0 - 1217.5
S		12175	F2	Z			R region w 2 "S" and
S		12310	PS2			78 220	post D2 folding 1217.5 -
S		12490	PS2			78 220	1267.8
S		12678	F2	R		75 220	PS2 region 1267.8 - 1299.0
S		12870	PS2			60 220	(post D2 folding)
S		12990	F2	P			RS2 region 1299.0 - 1323.0
S		13070	PS2			80 220	
S		13230	F2	R			PS2 region 1323.0 - 1328.0
S		13270	PS2			75 220	(post D2 folding)
S		13280	F2	P			Post D2 bxia 1328.0 - 1341
							- no sym, no S2
S		13410	F2	P		55 220	PS2 region 1341.0 - 1364.5
S		13580	PS2			72 220	- post D2 folding
S		13645	F2	P			RS2 region 1364.5 - 1380.0
S		13770	PS2			69 220	
S		13800	F2	R			PS2 region 1380.0 - 1397.0
S		13860	PS2			74 220	
S		13970	F2	P		73 220	

EOH.

CYPRUS ANVIL MINING CORPORATION

DIAMOND DRILL CORE LOG

Hole Number: 80-VX-1

Project: VANGORDA

Location: VANGORDA PLAT.

Claim: _____

~~Terr. Plane~~ UTM Co-ords.: 902676.924 N

593347.499 E

Grid Co-ords.: _____

_____

Elevation: 1127.117 metres

Total Depth: 817.8 m.

Fabric Orientation Diagram:

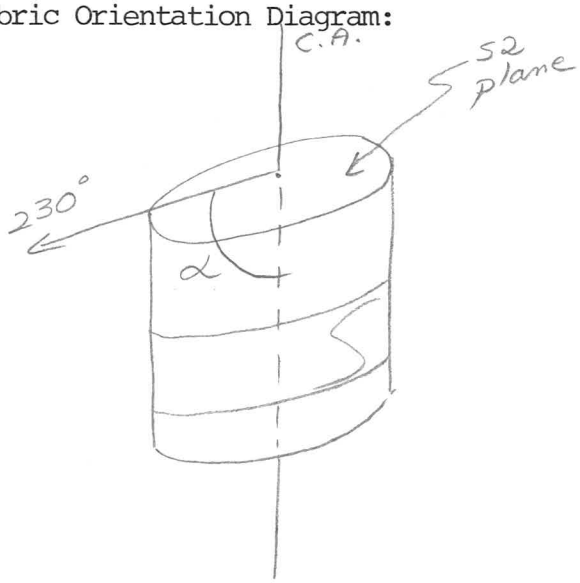

All symmetry determinations looking

NW with 52 dipping

SW with dip azimuth 220°.

Purpose: dump site & testing units 5/3 contact d.d. from Vangorda.

Logged by: DJH & JWM Date(s) Logged: _____

Drilling Contractor: Arctic D.D

Core: Size From To Collar Cased and Capped: ____

_____ _____ _____

_____ _____ _____

_____ _____ _____

Started: _____ Completed: _____

Cyprus Anvil Mining Corp.

Diamond Drill Core Log

DDH 80-VX-1

Code	Drillhole	Elevation	Northing	Easting	Comments
1	2 8	10 16	17 24	25 32	34 48
T	80-VX-1	1127.12	902676.9	593347.5	METERS

Code	Drillhole	Depth	Zenith Angle	True Azimuth	Comments
1	2 8	10 14	22 26	28 32	34 56
R	80-VX-1	0 0	180.0	.	ATCOLLAR
R	80-VX-1	153 3	176.0	053.0	
R	80-VX-1	144 8	171.5	039.0	
R	80-VX-1	236 2	166.5	058.0	
R	80-VX-1	327 6	160.0	043.0	
R	80-VX-1	510 5	152.0	042.0	
R	80-VX-1	602 0	150.0	035.0	
R	80-VX-1	693 4	148.5	028.0	
R	80-VX-1	754 3	154.0	015.0	
R	80-VX-1	784 8	154.0	017.0	
R	80-VX-1	815 3	154.0	011.0	
R		.	.	.	
R		.	.	.	
R		.	.	.	
R		.	.	.	
R		.	.	.	

Code	Drillhole	Comments, Errant Remarks, Snivellings and/or Lewd Suggestions
1	2 8	10 47

DDH 80-VX-1 (2 8)

Cyprus Anvil Mining Corp.

Lithologic Log

Logged By: JWM

Code	From	To	Unit	Code	Description
1	10 14	16 20	22 23	25 27	
L	10	1460	01	1#	CASING
L	1460	1527	02	5C10	numerous qtz-carbonate pods + stringers, calcareous throughout; characteristic (diagnostic?) flesh coloured flakey mineral locally present, minor interbanded 5D
L	1527	1528	03	5C10	gouge zone (possibly mud from previous run).
L	1528	1542	04	5C10	as in unit 02, grain size coarsening towards end of interval - almost as if clastic texture.
54 L	1542	1560	05	5D10	distinctly different from "normal" laminated banded 5D; phyllitic non-calcareous, non-chloritic "wispy" bands 5D like lith in tuffaceous phyllite. locally pink flaky mineral indicative of 5C. overall ≈ 5B7
L	1560	1567	06	5C10	as in unit 04, 02 - abundant carbonates
64 L	1567	1649	07	5D10	as in unit 05, locally ≈ 4L0 but this is probably related to 5C overall = 5D = 5B7 = non-calcareous.
L	1649	1675	08	5C10	coarse grained variant abundant pink flesky mineral? andalusite?, non-calc.
L	1675	1682	09	5C10	normal calcareous (zebra) 5C should compare unit 8 with unit 9 because of absence of andalusite?
L	1682	1694	10	01Q10	qtz-carbonate pod
L	1694	1721	11	5C10	variably calcareous similar to unit 08, calcareous
L	1721	1735	12	5C10	gouge zone. NOTE 72.1 - 75.3 m - 0.9m core rec.
L	1735	1755	13	5B10 2	
L	1755	1796	14	5C10	coarse, variably calcareous, fresh, abundant fine grained pink-flesh andalusite. - Carbonates

DDH 80-VX-1 (2 8)

Cyprus Anvil Mining Corp.

Lithologic Log

Logged By: JWM

Code	From	To	Unit	Code	Description
1	10 14	16 20	22 23	25 27	
L	1796	1799	15	5C10	gouge
L	1799	1807	16	5C10	As in unit 14, minor zebra type 5C
L	1807	1816	17	5C10	as in unit 14, Fresher appearance - non-calcareous throughout, locally coarse grained, very Fine grained andalusite?
L	1816	1881	18	5C10	As in unit 17, calcareous, minor 5C02 at beginning of interval.
L	1881	1915	19	5C10	As in unit 17, locally coarse grained, very Fresh, non-calcareous.
L	1915	1945	20	5B10	sericite, muscovite bearing
L	1945	11176	21	5B10	"normal" 5B, calcareous throughout po > py, po not abundant.
L	11176	11673	22	5B10	As in unit 21, but overall darker in colour → 5B02, again po ≫ py; py not observed
L	11673	11734	23	5D10	laminated banded, very calcareous, py ≤ po po? as Fine diss. in S_2 plane., contact with overlying 5B is somewhat diffuse over 3m
L	11734	11758	24	5D10	phyllitic - possibly minor 5B - also contact region with 5C, calc.
L	11758	11773	25	5C10	minor 5D, well banded, calc.
L	11773	11952	26	5C10	massive, calcareous, characteristic pink-Flesh col. andalusite? py > po contact with 5D ~~at~~ at 195.2 represented by several cm. of green clay.
L	11952	12004	27	5D10	calcareous, minor (10-15%) locally interbanded 5C, abundant qtz carbonate sweats.
L	12004	12018	28	5C10	As in unit 26, minor gouge
L	12018	12104	29	5D0	As in unit 27
L	12104	12108	30	5C10	calc., coarse grained - cataclastic texture.

DDH 80-VX-1 (2 8)

Cyprus Anvil Mining Corp.

Lithologic Log

Logged By: JWM

Code	From	To	Unit	Code	Description
1	10 14	16 20	22 23	25 27	
L	12110 8	12135 7	31	5C10	As in unit 26, locally minor 5D interbanded.
L	12135 7	12147 3	32	5D10	laminated banded, calcareous
L	12147 3	12178 6	33	5B10	normal calcareous grey phyllite poss py, abundant qtz-carbonate pods, carbonates foliaform to S_2
L	12179 6	12185 7	34	5B10	as in unit 33, but small discontinuous qtz-carbonate veins crosscutting S_2, difficult to determine a preferred orientation possibly dipping opposite to S_2 with inter angle = 90°
L	12185 7	12921	35	5B0	as in unit 34, but qtz-carb. stringers more dominant and locally appears (5B) as a breccia with qtz-carbonate infillings
L	12921	12929	36	5B16	fault breccia + gouge
L	12929	12933	37	5B16	~~Fault~~ gouge
L	12933	12938	38	5B16	as in unit 36
L	12938	12983	39	5B0	Similar to unit 34, cross cutting qtz carbonates not as abundant.
L	12983	30104	40	5C10	50:50 5C:5D interbanded, calcareous. chlorite > biotite + muscovite
L	30104	30231	41	5B10	
L	30231	30377	42	5D10	calc
L	30377	30411	43	5C10	", 5D "looking"
L	30411	30688	44	5D10	minor interbedded 5D
L	30688	30888	45	5B10	interbanded 5D = 20%
L	30888	31127	46	5B0	as in unit 41
L	31127	31167	47	5C10	calcareous, characteristic salt-&-pepper and.
L	31167	32110	48	5C10	As in unit 47, but non-~~ct~~ calcareous.
L	32110	32133	49	5C10	calc., 5D looking
L	32133	32400	50	5D10	very F.g., minor carbonates.
L	32400	32444	51	5C10	As in unit 49
L	32444	32622	52	5D10	as in unit 50, minor intervals 5C as in unit 51

DDH 80-VX-1 (2 … 8)

Cyprus Anvil Mining Corp.
Lithologic Log

Logged By: JWM

Code (1)	From (10–14)	To (16–20)	Unit (22 23)	Code (25–27)	Description
L	3262	3299	53	5B6	muscovitic
L	3299	3306	54	5D6	as in unit 50
L	3306	3318	55	5B0	
L	3318	3349	56	5D0	minor 5B, calc, finely banded = S_2
L	3349	3374	57	5B0	→ 5B02, dark in colour - dark grey.
L	3374	3438	58	5B0	→ 5B06, as in unit 57 po > py
L	3438	3470	59	5B0	as in unit 57.
L	3470	3490	60	5C0	→ 5D looking
L	3490	3542	61	5C0	banded, calcareous
L	3542	3602	62	5C0	30% interbanded 5D throughout
					interval.
L	3602	3722	63	5C0	distinct pink andalusite present locally.
					well banded
L	3722	3739	64	5D0	typical 5D-5B inter-tongueing
					in on margins of 5C.
L	3739	4025	65	5B0	as in unit 57, po > py,
					locally very minor 5D; abundant
					qtz-carbonate bands.
L	4025	4043	66	5B7	→ 5B73; minor 5D3 interbanded
L	4043	4218	67	5B0	
L	4218	4310	68	5B0	+ bio.; possibly 5B73 @ the chl. → bio.
					meta. transition.
L	4310	4317	69	5C0	50:50 5D3:5C3; 5C is "grainy"
					looking
L	4317	4390	70	5B0	± bio; possibly interbanded 5B73, 5B0
L	4390	4402	71	5DC	70:30 5D3:5C3
L	4402	4409	72	0E2	→ 0E29?; plag phenos (~1mm) in a
					dirty green soft calc. matrix; cts. look intrusive.
L	4409	4601	73	5B0	+ bio; c.f. unit 68
L	4601	4639	74	5D3	w/20% 5B73
L	4639	4651	75	5B0	
L	4651	4657	76	5B0	?; sandy "fault" (?) zone; some 5B0 frags.
L	4657	4668	77	5DB	70:30 5D3:5B0 + 5B73
L	4668	4686	78	5B0	± bio; c.f unit 70
L	4686	4708	79	5D3	w/10% 5C3? - grainy, poorly banded -

which could also be an exotic species of tuff

DDH 80-VX-1 (2 / 8)

Cyprus Anvil Mining Corp.
Lithologic Log

Logged By: DJH

Code	From	To	Unit	Code	Description
1	10 14	16 20	22 23	25 27	
L	417.08	417.53	810	5B10	± bio; c.f. unit 70; qtz-carb. veinlets
L	417.53	513.00	81/	5B10	w/ occ. bio.; in general does not look like typical 5B (lots of pressure solution colour striping) but contains definitive mineralogy.
L	513.00	513.04	82	5B1D	70:30 5B0:5D3; bxia zone w/ gouge cts.
L	513.04	513.49	813	5B10	c.f. unit 81
L	513.49	610.89	814	5B10	w/ 30% 5B6; c.f. unit 81 but some non-calc ints.
5A L	610.89	611.23	815	5A1/	minor strat py in siliceous bands (5A19)
L	611.23	611.47	816	5D16	~1% sheared out chl. mottles; minor maripasite; small band 5A 613.9-614.2
5A L	611.47	613.71	817	5A1/	minor py as blebs and fract. fillings.
L	613.71	614.77	818	5E10	phyllitic marble
5A L	614.77	615.92	819	5A1/	c.f. unit 87
L	615.92	616.39	910	3D1/	purple bio. banding (distinctive)
L	616.39	616.65	911	3B10	w/ minor 3C
L	616.65	616.88	912	3C12	dark green-grainy
3E L	616.88	617.60	913	3E1/	
L	617.60	617.70	914	3D1/	c.f. unit 90
L	617.70	617.78	915	3C13	c.f. unit 92 only $CO_3^=$ bearing
L	617.78	618.27	916	3B12	meta-volc?
L	618.27	618.94	917	3D1/	c.f. unit 90
L	618.94	619.03	918	3B1C	50:50 3B2:3C3 c.f. units 96 & 95.
L	619.03	619.13	919	3G10	
L	619.13	619.25	920	3C13	c.f. unit 95
L	619.25	619.50	921	3D1/	c.f. unit 90
L	619.50	619.72	922	3C13	minor 3B2
L	619.72	710.03	923	3G10	→ 369 locally.
L	710.03	710.18	924	3C13	minor 3B2
L	710.18	710.54	925	3G10	→ 369 locally
L	710.54	711.69	926	3E10	→ 369 "
L	711.69	715.74	927	3G10	minor 3BC bands 722.5-722.8, 727.9-728.2, 735.7-735.9
L	715.74	715.80	928	3G10	? fault zone - clay and bxia frags.

DDH 80-VX-1 (2 … 8)

Cyprus Anvil Mining Corp.
Lithologic Log

Logged By: DJH.

Code	From	To	Unit	Code	Description
1	10 … 14	16 … 20	22 23	25 … 27	
L	175180	176103	09	31G10	
L	176103	176110	10	31B1C	70:30 3B2 : 3B3
L	176110	176118	11	31G10	
L	176118	176266	12	31B12	
L	176266	177288	13	31E12	→ 3E21 ; → 3G9 locally.
L	177288	177162	14	31G10	
L	177162	177699	15	31B12	
L	177699	177733	16	31G10	
L	177733	177888	17	31B12	
L	177888	177977	18	31G10	
L	177977	178115	19	31D11	
L	178115	178334	210	31G10	w/ 3B2 band 782.3 - 782.5
L	178334	178172	21	31D11	? w/ minor 3C.
L	178172	178178	212	31B12	
L	178178	179002	213	31E12	
L	179002	180112	214	31G10	
L	180112	180174	215	31B12	
L	180174	181178	216	31G10	
		EOH.			

DDH 80-VX-1 (2 / 8)

Cyprus Anvil Mining Corp.
Structural Log

Logged By: JWM

Code	From	To	Feature	Sym	S_1 Dip Direct.	S_2 Dip Direct.	Description
1	10 14	16 20	22 24	26	28 32	34 38	
S		4660	PS2			64 2210	R region 46.0 - 91.5
S		5106	PS2			45 2210	
S		5570	PS2			68 2210	
S		6255	PS2			65 2210	
S		6555	PS2			69 2210	
S		7211	PS2			70 2210	
S		7777	PS2			73 2210	
S		8288	PS2			70 2210	
S		8844	PS2			75 2210	
S		9155	F2R			70 2210	Rock Region to 91.5 - 5C, 5D
S		9566	F2P			81 2210	PS2 region 91.5 - 95.6
S		9677	F2Z				Z region 95.6 - 96.7
S		9799	F2P			55 2210	PS2 region 96.7 - 97.9
S		10088	C1S2			56 2210	Z region 97.9 - 105.4
S		10554	F2Z			70 2210	PS2 region 105.4 - 110.9
S		11109	F2P			73 2210	Z region 110.9 - 111.7
S		11117	F2Z				S region 111.7 - 113.4
S		11134	F2S			78 2210	PS2 region 113.4 - 121.1
S		12111	F2P			80 2210	S region 121.1 - 128.9
S		12559	C1S2			64 2210	
S		12889	F2S			68 2210	
S		13117	C1S2			69 2210	
S		13337	F2M			67 2210	M region 128.9 - 133.7
S		13662	F2Z			73 2210	Z region 133.7 - 136.2
S		13992	F2S			65 2210	S region 136.2 - 139.2
S		14106	F2Z			73 2210	Z region 139.2 - 140.6
S		14434	F2P			75 2210	PS2 region 140.6 - 143.4
S		14764	F2S			78 2210	S region 143.4 - 146.4
S		14995	F2Z			70 2210	Z region 146.4 - 149.5
S		15220	F2M			70 2210	M region 149.5 - 152.0
S		15535	F2Z			58 2210	Z region 152.0 - 153.5
S		15746	F2S				S region 153.5 - 154.6
S		15882	F2P			69 2210	PS2 region 154.6 - 158.2
S		16104	F2Z			75 2210	Z region 158.2 - 160.4
S		16117	F2S			66 2210	S region 160.4 - 161.7

DDH 80-VX-1 (2 8)

Cyprus Anvil Mining Corp.
Structural Log

Logged By: JWM

Code	From	To	Feature	Sym	S_1 Dip Direct.	S_2 Dip Direct.	Description
1	10 14	16 20	22 24	26	28 32	34 38	
S		11616 3	IF12	Z		70 2120	Z region 161.7 - 166.3
S		11683	PIS12			70 2120	PS2 region 166.3 - 170.8
S		11710 8	IF12	P		72 2120	M region 170.8 - 173.0
S		11730	IF12	M		72 2120	D.D. region 173.0 - 173.7
S		11737	IF12	D			Z region 173.7 - 176.6
S		11755	CIS12	Z		72 2120	
S		11766	IF12	Z		70 2120	
S		11818	PIS12			64 2120	
S		11851	PIS12			66 2120	
S		11912	PIS12			85 2120	
S		11973	PIS12			65 2120	
S		12004	PIS12			70 2120	
S		12034	PIS12			66 2120	
S		12075	PIS12	R		63 2120	R region 176.6 - 207.5
							SC
S		12090	CIS12	Z		55 2120	Z region 207.5 - 209.0
S		12098	CIS12	S		62 2120	S region 209.0 - 209.8
S		12126	PIS12			71 2120	~~PS2~~ R region 209.8 - 238.5
S		12156	PIS12			73 2120	
S		12187	PIS12			65 2120	
S		12248	PIS12			60 2120	
S		12278	PIS12			54 2120	
S		12339	PIS12			70 2120	
S		12385	PIS12	R		63 2120	Z region 238.5 - 243.1
S		12421	CIS12			78 2120	
S		12431	IF12	3			S region 243.1 - 251.9
S		12463	CIS12			63 2120	
S		12519	IF12	E		66 2120	Z region 251.9 - 270.4
S		12550	CIS12			80 2120	
S		12584	CIS12			77 2120	
S		12643	CIS12			69 2120	
S		12704	IF12	3		72 2120	S region 270.4 - 273.2
S		12732	IF12	E			Z region 273.2 - 285.6
S		12760	CIS12			75 2120	
S		12820	CIS12			74 2120	
S		12856	IF12	Z			R region 285.6 - 293.5

DDH 80-VX-16 (2 / 8)

Cyprus Anvil Mining Corp.
Structural Log

Logged By: DJH.

Code	From	To	Feature	Sym	S_1 Dip Direct.	S_2 Dip Direct.	Description
1	10 14	16 20	22 24	26	28 32	34 38	
S		12185	PS12			74 2210	(zone of intense reinlets
S		12935	IF2R			62 2240	obscuring D2 sym.)
S		12956	CIS12			77 2210	M region (subequal S&Z)
S		12970	IF2M				293.5 - 297.0
S		13100	CIS12			70 2210	S region 297.0 - 304.8
S		13048	IF2S				R region 304.8 - 306.8
S		13060	PS12			67 2210	
S		13068	IF2R				S region 306.8 - 312.7
S		13123	CIS12			73 2240	
S		13127	IF2				R region 312.7 - 321.0
S		13184	PS12			40 2210	
S		13210	IF2R				M region 321.0 - 323.3
S		13233	IF2M			61 2240	R region 323.3 - 325.7
S		13257	IF2R				A Z region 325.7 - 329.6
S		13296	IF2Z			55 2210	R region 329.6 - 334.7
S		13347	IF2R			70 2210	Z region 334.7 - 347.1
S		13405	CIS12			70 2220	
S		13466	CIS12			70 2210	
S		13471	IF2Z				R region 347.1 - 354.2
S		13527	PS12			74 2210	
S		13542	IF2R				M region (equal S&Z)
S		13588	CIS12			73 2210	354.2 - 360.6
S		13606	IF2M				R region 360.6 - 372.5
S		13649	PS12			75 2210	
S		13695	PS12			78 2210	
S		13725	IF2R				Z region 372.5 - 378.5
S		13755	CIS12			71 2220	
S		13785	IF2Z				M region 378.5 - 384.2
S		13800	CIS12			75 2210	(equal S&Z)
S		13842	IF2M				Z region 384.2 - 396.0
S		13856	CIS12			75 2220	
S		13917	CIS12			69 2210	
S		13960	IF23			70 2210	S region 396.0 - 398.1
S		13981	IF2E				Z region 398.1 - 409.9
S		14025	CIS12			76 2210	
S		14070	CIS12			69 2240	

DDH 82-VX-1 (2 8)

Cyprus Anvil Mining Corp.
Structural Log

Logged By: DJH.

Code	From	To	Feature	Sym	S_1 Dip Direct.	S_2 Dip Direct.	Description
1	10 14	16 20	22 24	26	28 32	34 38	
S		141099	IFR	Z			M region (equal S&Z)
S		141130	CIS12			8221220	409.9 - 416.0
S		141160	IFR	M			PS2 region 416.0 - 420.2
S		141190	CIS12			7182210	
S		142102	IFR	P			Z region 420.2 - 434.6
S		142152	CIS12			7172210	
S		143116	CIS12			7112210	
S		143146	IFR	Z			PS2 region 434.6 - 437.1
S		143771	IFR	P		7152210	Z region 437.1 - 438.9
S		143899	IFR	Z			R region 438.9 - 440.1
S		144001	IFR	R			Intrusive 440.1 - 440.9
							- no sym. or S2.
S		144135	CIS12			8222210	Z sym 440.9 - 463.9
S		144196	CIS12			8102210	
S		145160	CIS12			7192210	
S		146120	CIS12			7122210	
S		146399	IFR	3			S region 463.9 - 469.2
S		146192	IFR	S		7122210	PS2 region 469.2 - 478.7
S		147134	PIS12			6142210	
S		147187	IFR	P		7122210	S region 478.7 - 511.2
S		148288	CIS12			8102210	(partial PS2)
S		148170	CIS12			7172210	
S		149299	CIS12			7162210	
S		149190	CIS12			6182210	
S		151051	CIS12			8102210	
S		151112	IFR	E		7162210	Z region 511.2 - 523.8
S		151170	CIS12			6192210	(partial PS2)
S		152138	IFR	Z		7162210	PS2 region 523.8 - 564.2
S		152188	PIS12			7142210	(minor Z)
S		153134	PIS12			6122210	
S		153180	PIS12			8102210	
S		154140	PIS12			7122210	
S		155104	PIS12			7112210	
S		155165	PIS12			7122210	
S		156266	PIS12			7142210	
S		156422	IFR	P			Z region 564.2 - 578.2

DDH 80-VX-1 (2 8)

Cyprus Anvil Mining Corp.
Structural Log

Logged By: DJH.

Code	From	To	Feature	Sym	S_1 Dip Direct.	S_2 Dip Direct.	Description
1	10 14	16 20	22 24	26	28 32	34 38	
S		5687	CS2			75 220	
S		5751	CS2			69 220	
S		5782	F2	Z			PS2 region 578.2-608.9
S		5813	PS2			70 220	
S		5872	PS2			80 220	
S		5934	PS2			71 220	
S		5996	PS2			65 220	
S		6057	PS2			69 220	
S		6089	F2	P			R region (P?) 608.9-659.2
S		6114	PS2			77 220	
S		6178	PS2			69 220	
S		6239	PS2			81 220	
S		6300	PS2			84 220	
S		6360	PS2			70 220	
S		6409	PS2			78 220	
S		6452	PS2			75 220	
S		6497	PS2			80 220	
S		6559	PS2			68 220	
S		6592	F2	R			PS2 region 659.2-663.9
S		6623	PS2			76 220	
S		6639	F2	P			R region 663.9-668.8
S		6684	PS2			79 220	
S		6688	F2	R			PS2 region 668.8-677.0
S		6748	PS2			62 220	
S		6770	F2	P			R region 677.0-682.7
S		6809	PS2			73 220	
S		6827	F2	R			PS2 region 682.7-689.4
S		6840	PS2			71 220	
S		6894	F2	P		70 220	R region 689.4-692.5
S		6925	F2	R			PS2 region 692.5-694.9
S		6949	F2	P		77 220	R region 694.9-697.1
S		6971	F2	R			PS2 region 697.1-762.6
S		7004	PS2			68 220	
S		7062	PS2			71 220	
S		7105	PS2			67 220	
S		7153	PS2			78 220	

DDH 80-VX-1 (2 / 8)

Cyprus Anvil Mining Corp.
Structural Log

Logged By: DJH

Code	From	To	Feature	Sym	S_1 Dip Direct.	S_2 Dip Direct.	Description
	10 14	16 20	22 24	26	28 32	34 38	
S		17121 4	PS12			619 2210	
S		17217 5	PS12			615 2210	
S		17313 6	PS12			710 2210	
S		17319 7	PS12			718 2210	
S		17458 8	PS12			71 2210	
S		17519	PS12			810 2210	
S		17574	PS12			712 2210	
S		17626	F12P			510 2210	R region 762.6 – 772.8
S		17693	PS12			815 2210	
S		17728	F12R				PS2 region 772.8 – 801.2
S		17757	PS12			812 2210	
S		17815	PS12			719 2210	
S		17879	PS12			713 2210	
S		17940	PS12			717 2210	
S		17992	PS12			812 2210	
S		18012	F12P				R region 801.2 – 807.4
S		18053	PS12			812 2210	
S		18074	F12R				PS2 region 807.4 – 817.8
S		18098	PS12			717 2210	
S		18147	PS12			813 2210	
		EOH					

CYPRUS ANVIL MINING CORPORATION

DIAMOND DRILL CORE LOG

Hole Number: V-158

Project: VANGORDA

Location: VANGORDA PLATEAU -Relog

Claim: _____

Terr. Plane Co-ords.: _____ N

_____ E

Grid Co-ords.: _____

_____

Elevation: _____

Total Depth: 1270.0 ft

Fabric Orientation Diagram:

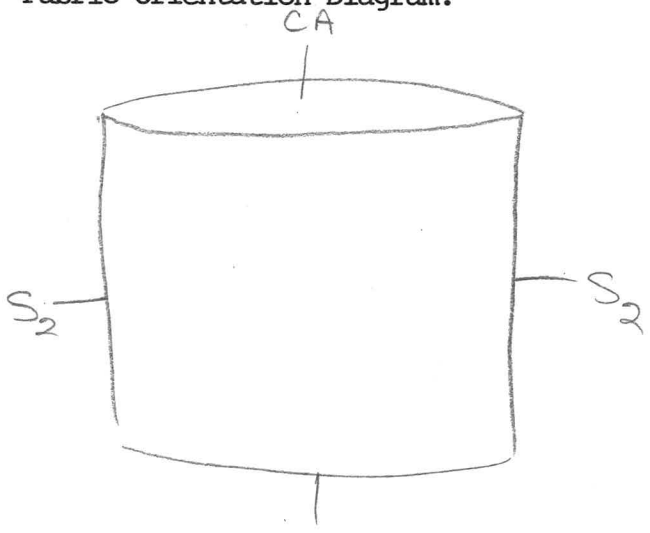

All symmetry determinations looking NW with S_2 dipping SW with dip azimuth 220.

Purpose: _____

Logged by: JWM Date(s) Logged: _____

Drilling Contractor: A.D.D

Core: Size From To Collar Cased and Capped: ____

_____ _____ _____

_____ _____ _____

_____ _____ _____

Started: _____ Completed: _____

Cyprus Anvil Mining Corp.

Diamond Drill Core Log

DDH V-158

Code	Drillhole	Elevation	Northing	Easting	Comments
1	2 8	10 16	17 24	25 32	34 4
T					

Code	Drillhole	Depth		Zenith Angle		True Azimuth	Comments
1	2 8	10	14	22	26	28 32	34 50
R		0	0	.		.	ATCOLLAR
R				.		.	
R				.		.	
R				.		.	
R				.		.	
R				.		.	
R				.		.	
R				.		.	
R				.		.	
R				.		.	
R				.		.	
R				.		.	
R				.		.	
R				.		.	
R				.		.	
R				.		.	

Code	Drillhole	Comments, Errant Remarks, Snivellings and /or Lewd Suggestions
1	2 8	10

DDH V158 (2–8)

Cyprus Anvil Mining Corp.
Lithologic Log

LONG

Logged By: JB

m	Code	From	To	Unit	Code	Description
	1	10–14	16–20	22 23	25 27	
		10	106		0B	O/B
32.3		106	110		4EG	FAIR ASSAY
33.5		110	120		4G	GOOD ASSAY 5' CRAP FAIR ASSAY 6%
36.6		120	125		4LO	
38.1		125	132		4G/C	PASS 4G Very good ASSAY
40.2		132	150		4LO	/3/7
45.7		150	202		4LO	/4C/7 CORE MISSING. FAIR ASSAYS Poss more 3G
51.8		170	180		4E/G	? 170–180
54.9		180	193		4CE	Poss ASSAYS 46%
58.8		193	252		4LO	/3 NEG. SILICA NEG PYRR. NIL ASSAY
76.8		252	254		4C	
77.4		254	270		4LO	/3
82.3		270	275		4LO	/7.
83.8		275	288		4L6	/0
87.8		288	295		5D	LEOPARD ROCK. (NONCALC CARB)
89.9		295	350		4L6	As redefined chlorite + clots + bull qtz + minor sulph
106.7		350	360		4LO	/3 ALTERED 4AO SEE TRANSITION SAMPLES
109.7		360	396 8		4AO	minor alt to good 4AO
120.9		396 8	406		4LO	
123.8		406	418		4C	Low ASSAYS.
127.4		418	422		4AO	
128.6		422	426		4C	Poor grade
129.9		426	430		4AO	
131.1		430	441		5AO	
134.4		441	472		4AO	Minor 4C 1-2' section grading ↔ 4AO good stuff.
143.9		472	477		4C	
145.4		477	481		4H	MASSIVE PYRR
146.6		481	506		4LO	/7.
154.2		506	643		4L6	Less alt then 275–288
196.0		643	743		4L6	→ 5B6 CORE MISSING. 643–825
226.5		743	840	334	5B6	–5A minor 5A 2-3' grade in grade out
256.0		840	1096		5AO	
						END of HOLE

Note * (65° @ bottom)

DDH V-158 (2 / 8)

Cyprus Anvil Mining Corp.

Structural Log

LONG

Logged By: GS

m

Code	From	To	Feature	Sym	S_1 Dip Direct.	S_2 Dip Direct.	Description
1	10 14	16 20	22 24	26	28 32	34 38	
		1110	C S 12	S		810	
		1410	C S 12	Z		810	
		2115	C S 12	S		710	
		2319	C S 12	Z		719	
		2510	C S 12	Z		610	
		2615	C S 12	Z		810	
		2810	C S 12	Z		810	
		2816	C S 12	Z			
		2910	C S 12	S		610	
		3210	C S 2	Z		610	
		3415	C S 12	S		610	
		3510	C S 12	S		610	
		3613	S 12			610	
		3710	C S 12	S		810	
		3815	C S 2			610	
		3914	C S 12	Z		610	
		4010	C S 12	S			5?
		4015	C S 12	S		710	
		4216		S		710	
		4415		S		710	
		4518	S 12			810	
		4713	S 12	S		710	
		4817	S 12	Z		810	Two Z's
		5090	S 12	S		810	Two S's
		5145	S 12			710	
		5510		S			
		5615	S 12	Z		815	
		5715	S 12			510	
	5719	6112	P S 12			610	parallelism
		6113	S 12	S		610	
		6210	S 12	Z		710	
	6413	8215					CORE MISSING
		8218	S 12	S		815	
		8315	S 12	Z		810	
		8517	S 12	S		810	
		8710	S 12			610	

DDH V-158

Cyprus Anvil Mining Corp.

Structural Log LONG

Logged By: GS

Code	From	To	Feature	Sym	S_1 Dip Direct.	S_2 Dip Direct.	Description
1	10 14	16 20	22 24	26	28 32	34 38	
		8813	S12	S		810	3 S's
		9010	S2			810	
		9018	S12	S		610	Possible F2 fold nose : S1
		9018	S1		10		
		9314	S12	S		710	Two S's
		9518	S12	S		610	
		9613	S12	Z		610	
		9813	S12	S		710	
		10000	S12	S		710	
		10000	S12	Z		710	3 Z's (and the 1 S)
	10111	10318	S12			710	Parallel
		10410	S12	Z		810	
		10415	S12	Z		810	Two Z's
		10415	S12	S		810	
		10610	S12	Z		810	
		10615	S12	Z		810	
		10715	S12	Z		810	Two Z's

CYPRUS ANVIL MINING CORPORATION

DIAMOND DRILL CORE LOG

Hole Number: V-159 Relog.

Project: VANGORDA

Location: VANGORDA PLATEAU

Claim: _____

Terr. Plane Co-ords.: _____ N

_____ E

Grid Co-ords.: _____

_____

Elevation: _____

Total Depth: 851.0

Fabric Orientation Diagram:

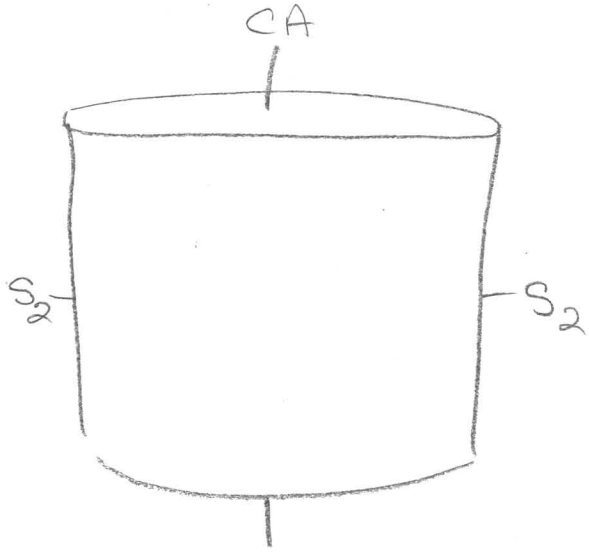

All symmetry determinations looking NW with S_2 dipping SW with dip azimuth 220.

Purpose: _____

Logged by: JWM Date(s) Logged: _____

Drilling Contractor: A.D.D. Core: Size From To Collar Cased and Capped: ____

_____ _____ _____

_____ _____ _____

_____ _____ _____

Started: _____ Completed: _____

Cyprus Anvil Mining Corp.

Diamond Drill Core Log

DDH _____
2 8

Code	Drillhole	Elevation	Northing	Easting	Comments
1	2 8	10 16	17 24	25 32	34 4
T					

Code	Drillhole	Depth	Zenith Angle	True Azimuth	Comments
1	2 8	10 14	22 26	28 32	34 5
R		0 0	.	.	AT COLLAR
R			.	.	
R			.	.	
R			.	.	
R			.	.	
R			.	.	
R			.	.	
R			.	.	
R			.	.	
R			.	.	
R			.	.	
R			.	.	
R			.	.	
R			.	.	
R			.	.	
R			.	.	

Code	Drillhole	Comments, Errant Remarks, Snivellings and /or Lewd Suggestions
1	2 8	10

DDH V-159 (2 — 8)

Cyprus Anvil Mining Corp.
Lithologic Log

Logged By: JWM

	Code	From	To	Unit	Code	Description
		1 10 14	16 20	22 23	25 27	
	L	100	1111 0	01		0/B 418 45
33.8	L	1110	1120	002	5B1	musc >> chlor.
36.6	L	1200	1186 0	003	5A1	→ 4A minor sulfides (py), 18' CORE REC.
56.7	L	1860	1818 0	04	5A1	As in UNIT 3, contains abundant ball quartz
57.3	L	1880	2160	05	5A0	
65.8	L	2160	2220	006	5A0	/4A0 very minor sulfides., calcareous.
67.7	L	2220	2530	007	5A10	As in unit 6
77.1	L	2530	3090	008	4A0	/5A0 Variably calcareous throughout interval, very weakly mineralized, well banded (?S2), Variably siliceous — minor(?) interbanded 5A throughout
94.2	L	3090	3667	009	5D10	Good 5D. calcareous (variably) throughout non-sulfide bearing, not siliceous 359'-362' - mottled texture flattened "augens" (primary texture?)
111.8	L	3667	3890	10	5B2	3/5A3 Variably chloritic prob. represents transition between 5A/5B, notably more calcareous
118.6	L	3890	3990	11	5B1	3(9) minor sulfides (py) in siliceous bands
121.6	L	3990	A1A5	12	5B3	/5E contains abundant tectonic fragments (angular + rounded, gross allignment with S_2)
126.3	L	A1A5	A1E5	13	5D3	(?3)
126.6	L	A1E5	A225	14	5B0	
128.8	L	A225	AA20	15	5B1	As in unit 14, more siliceous, slightly more calcareous. 587 towards EOI
134.7	L	AA20	A640	16	5C0	greenish-blue cast, med grained, ? distinctly very little relict outlines remain) distinct from 5D.
						NOTE: NO CORE 453-577
141.4	L	A640	A990	17	5A1	5B? NO CORE
152.1	L	A990	52A6	18	5A1	? NO CORE
159.9	L	52A6	5770	19	5A1	? NO CORE
175.9	L	5770	6200	20	4A1	7 abundant qtz. sweats, less biotite and more graphite — would be very similar to 4A, minor(very) sulfides.

Altered 5B? (NOT WME)

DDH V-159 (2–8)

Cyprus Anvil Mining Corp.

Lithologic Log

Logged By:

	Code (1)	From (10–14)	To (16–20)	Unit (22–23)	Code (25–27)	Description
189.0	L	6200	6470	20	4L	/5B7 As in Unit 19 As in unit 19, minor chlorite
						py + po as sulfides in more siliceous
						bands, variably calcareous altered?
197.2	L	6470	6850	21	5B6	minor pyrite 5B6/36 ?
208.8	L	6850	6920	22	5B	Marroon weathering unit - calcareous?
210.9	L	6920	7640	23	5B6	/36 As in unit 21
232.9	L	7640	7680	24	5B1	27 musc > chlor.
234.1	L	7680	7770	25	5B0	5 No sulfides
236.8	L	7770	7810	26	5B	Maroon weathering unit, as in unit 22
238.1	L	7810	7910	27	5B1	(calcareous) tuffaceous?
241.1	L	7910	8120	28	5B	As in unit 26, 22, 802-804 graphitic phyllite 5A
247.5	L	8120	8480	29	5B0	musc > chlor - no sulfides
258.5	L	8480	8510	30	5B	As in unit 28, 26, 22

177 766

DDH V-159 (2 … 8)

Cyprus Anvil Mining Corp.
Structural Log

Logged By: JWM

Code	From	To	Feature	Sym	S_1 Dip Direct.	S_2 Dip Direct.	Description
1	10 14	16 20	22 24	26	28 32	34 38	
S		1150	CS2	S		15 185	possibly F4 fold Here → 111 — 226 Steep S_2
S		1250	CS2	S		05 185	# to CA. (Note only
S		2500	PS2			58 185	See lithon structure in core 45 feet CORE recovered)
S		2580	PS2	S		50 185	
S		2680	PS2	S		68 185	Symmetry determinations
S		2740	PS2	Z		72 185	difficult ~~been~~ to
S		2800	PS2	S		58 185	obtain because of core
S		2900	PS2			70 185	size (AX) and pervasive
S		3090	PS2	S		66 185	nature of S_2
S		3190	PS2			70 185	
S		3400	PS2	S		62 185	
S		3550	PS2			72 185	
S		3690	PS2			64 185	
S		4190	PS2	3		78 185	
S		4210	PS2	S		75 185	
S		4270	PS2	Z		65 185	
S		4500	PS2			72 185	
S		5770	PS2			77 185	
S		5970	PS2			55 185	
S		6030	PS2	Z		64 185	
S		6070	PS2	S		49 186	
S		6160	CS2	E		58 185	
S		6190	PS2			50 185	
S		6240	CS2	E		70 185	
S		6250	PS2	S		60 185	
S		6350	PS2	S		67 185	
S		6520	CS2	Z		70 185	
S		6720	PS2			70 185	
S		6870	PS2			58 185	
S		6980	PS2			80 185	
S		7100	PS2	S		68 185	
S		7130	PS2	S		64 185	
S		7170	PS2	S		62 185	
S		7280	PS2	S		55 185	
S		7360	PS2	S		65 185	

DDH V-159 (2 / 8)

Cyprus Anvil Mining Corp.
Structural Log

Logged By: JWM

Code	From	To	Feature	Sym	S_1 Dip Direct.	S_2 Dip Direct.	Description
	10 14	16 20	22 24	26	28 32	34 38	
S		1712	PS12	S		58 185	
S		1749	PS2			72 185	
S		1765	PS12			45 185	
S		1776	PS12			55 185	
S		1791	PS12			40 185	
S		1807	PS2			30 185	805 — 814 steeps S_2
S		817	PS12			55 185	
S		1832	PS12			60 185	
S		1842	PS2			70 185	
S		1851	PS2			60 185	
							EOH

81 VX 01

NB logged on old system
p2 on new

CYPRUS ANVIL MINING CORPORATION

DIAMOND DRILL CORE LOG

Hole Number: 81-VX-01

Project: VANGORDA REFERENCE SECTION.

Location: VANGORDA

Claim: _____

UTM ~~Terr. Plane~~ Co-ords.: 903178.952 N

593915.005 E

Grid Co-ords.: Section 6E

_____

Elevation: 1146.204 m

Total Depth: 443.2 m

Fabric Orientation Diagram:

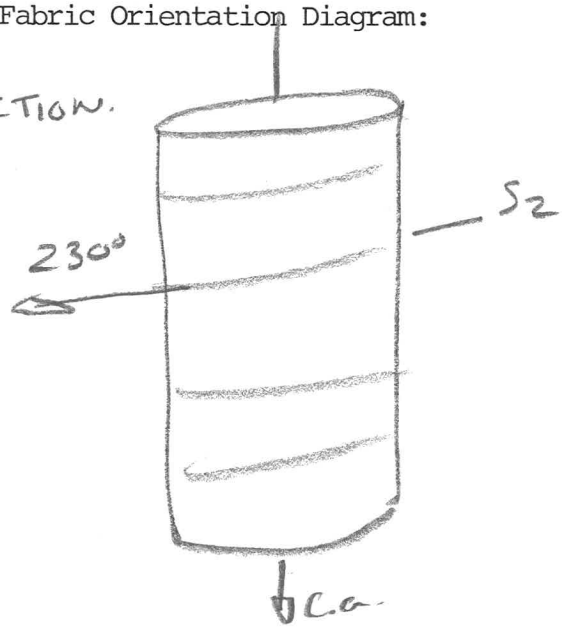

All symmetry determinations looking NW with S2 dipping SW with dip azimuth 230°.

Purpose: _____

Logged by: PN Date(s) Logged: APRIL 5,7,8,9 1981

Drilling Contractor: ARCTIC D.D

Core:

Size	From	To
NQ	0	EOH

Collar Cased and Capped: _____

Started: _____ Completed: _____

Cyprus Anvil Mining Corp.
Diamond Drill Core Log

DDH 81VX001 (2 — 8)

Date: July 1/81 Logged By: PN

Code	Drillhole	Elevation	Northing	Easting	Units (feet/metres)	R.F.E.	
	2 — 8	10 — 16	17 — 24	25 — 32	34 — 39	41 42	
T	81VX001	1127.12	9026769.5	593347.5	metres	SZ	

Code	Drillhole	Depth	Zenith Angle	True Azimuth	Comments
	2 — 8	10 — 14	22 — 26	28 — 32	34 — 56
R	81VX001	00	180.0	90.0	AT COLLAR
R	81VX001	713	178.5	177.0	
R	81VX001	1323	176.0	213.0	
R	81VX001	1932	173.5	238.0	
R	81VX001	2542	176.5	233.0	
R	81VX001	3152	176.0	353.0	
R	81VX001	3761	172.0	043.0	
R	81VX001	4371	172.0	042.0	

Code	Drillhole	Comments, Errant Remarks, Snivellings and / or Lewd Suggestions
	2 — 8	10 — 56

DDH 81-VX01 (2 … 8)

Cyprus Anvil Mining Corp.

Lithologic Log

Logged By: PN

Code	From	To	Unit	Code	Description
1	10 … 14	16 … 20	22 23	25 … 27	
L	00	462	1		O/B; triconed;
L	462	473	2	4L0	<1% py;
L	473	518	3	5B6	slightly bleached w/ alternating narrow (<1cm wide) qtz bands; gouge 50.6-50.7m; graphitic (5A6) 51.7-51.8m;
L	518	529	4	4A4	grade increases towards bottom of unit; vuggy w/ 5% PbZn 52.2-52.6m; 4AE w/ 15% PbZn 52.6-52.9m; negligible PbZn 51.8-52.2m;
L	529	536	5	4CD	4C w/ <1% cpy stringers; interbanded w/ 4D w/ 15-20% PbZn; 40% py;
L	536	569	6	4C8	1% cpy; 1% PbZn; 75% py; 10% mt; [4E83]; slightly calc. (minor barite);
L	569	695	7	5A6	3% py assoc. w/ qtz bands; bxia w/ graph. fragments in sulphide (mainly py, 90%) groundmass 58.2-58.7m; gouge 58.7-59.8m; PbZn bands <1 to 2cm. wide 60.2-60.3m (10% PbZn); minor 5B26; qtz-calc-po vein 67.2-67.4m; gouge 69.3-69.5m;
L	695	806	8	5B6	br. cne 71.0-71.2m; 75.2-75.3, 77.1-77.2m; <1% po assoc. w/ qtz bands <1 to 4cm. wide;
L	806	816	9	5A6	2% py stringers;
L	816	855	10	5B6	gouge 81.8-81.9m; 1% po blebs assoc. w/ thin (<0.5cm) qtz bands;
L	855	874	11	5A6	5%-10% py & po tension gash fillings & stringers;
L	874	921	12	4G48	60% py; 10-15% mt; 10% PbZn; banded; highly calcareous
L	921	933	13	4K38	negligible PbZn; scattered bxiated bands of carbonate; 10% mt; 4L5D band 92.9-93.0m;
L	933	940	14	4L17	<1% cpy stringers; massive po w/ qtz clasts 93.8-94.0m;
L	940	1035	15	5A9	3% po blebs; gouge 96.6-96.9m;

DDH 81-VX01 (2–8)

Cyprus Anvil Mining Corp.

Lithologic Log

Logged By:

Code (1)	From (10–14)	To (16–20)	Unit (22–23)	Code (25–27)	Description
					very slightly calc; gouge 102.7 – 103.0 m;
L	1035	1048	16	5B0	gouge
L	1048	1061	17	5A0	gouge & bxia; 20% bxia; 80% gouge;
L	1061	1080	18	5A0	numerous calc. t.g. fillings w/ py stringers
					(3%) 106.4 – 107.0 m;
L	1080	1100	19	5B6	50% gouge + br. core; 5A0 bxia w/
					calc. + py frags. in graphitic gr. mass
					109.0 – 109.1 m;
L	1100	1173	20	5A0	20% br. core;
L	1173	1194	21	5B6	
L	1194	1217	22	5A0	
L	1217	1232	23	5D0	slightly altered; bleached but w/ few
					dk. green blebs; highly calc; 4L1 122.9 –
					123.2 m;
L	1232	1243	24	5A6	
L	1243	1251	25	5D0	bleached; highly calc; banded;
L	1251	1274	26	4A0	3% po;
L	1274	1490	27	5A96	3% py; almost a 4A texture locally;
					40% br. core; 20% gouge (scattered);
L	1490	1518	28	5A6	gouge
L	1518	1565	29	5A6	almost a 4A texture, 3% py; 50%
					gouge;
L	1565	1623	30	5B6	2% po blebs; numerous calc. t.g. fillings;
					br. core 156.5 – 159.4 m;
L	1623	1630	31	5A6	
L	1630	1662	32	5B0	slightly calc; gouge 163.4 – 163.6 m;
L	1662	1694	33	5B0	gouge;
L	1694	1787	34	5B0	15% 5A0 interbands, 25% gouge +
					br. core; numerous calc. t.g. fillings;
					<1% py blebs;
L	1787	1804	35	5A0	gouge w/ siliceous pebbles;
L	1804	1831	36	4L0	gouge; 3% py blebs;
L	1831	1907	37	5A0	gouge 183.1 – 183.5 m; minor calcareous 5D0 interbands
					(~ 5 cm. in width 0.7 m. spacing);
					numerous calc. t.g. fillings; slightly
					brciated texture; minor py bands 189.3 – 189.4 m;

DDH 81-VX01 (2–8)

Cyprus Anvil Mining Corp.

Lithologic Log

Logged By: PN

Code (1)	From (10–14)	To (16–20)	Unit (22–23)	Code (25–27)	Description
					30% bxia;
L	1907	1944	38	5D4	slightly calcareous; bleached w/ few elongated gr. chl. blebs (11 S2) remaining; OQO 194.0 – 194.3m;
L	1944	2044	39	5A09?	very slightly calc [5A6]; 3% py as stringers, blebs + t.g. fillings; silica content incr. towards EOI; qtz. t.g. fillings + bands (almost a 4A texture); banded;
L	2044	2064	40	5B0	high sericite content produces a lt. coloured 5B; slightly altered? not quite a 4L; high chl. content; calcareous; numerous calc. t.g. fillings;
L	2064	2140	41	5B2	calcareous; numerous calc. t.g. fillings;
L	2140	2152	42	5A0	brecciated; calcareous;
L	2152	2643	43	5B0	OQO 220.5–220.8, 220.9 – 221.1m; local bt. dev; <1% po blebs. assoc. w/ qtz veins + bands; gouge 230.4–230.7m; where incr. in bt, there's a chl. incr ∴ a ck. colour (resembling calc-sil. of unit 3); gouge 235.0–235.1m; 242.4 – 242.8m; numerous calc t.g.f; thick calc. bands (<1 to 2 cm wide) 258.8 – 259.4m. w/ up to 3cm spacing;
L	2643	2709	44	5A0	bleached 5D4 bands 5–8cm. wide @ 268.5 – 268.8m. w/ 2 cm spacing; bx 265.0 – 265.3m; 2% py stringers & blebs; slightly calcareous;
L	2709	2734	45	4A0	no PbZn; 3% py blebs assoc. w/ qtz bands;
L	2734	2823	46	5A6	w/ 2% py stringers; non-calc; 1% po blebs assoc. w/ qtz-bands (w/ a 4A texture);
L	2823	2830	47	5F4	slightly altered chl. phyllite; sericitic + chl. bands; calcareous w/ calc. t.g. fillings;
L	2830	2850	48	5F0	<2% po blebs; calcareous;
L	2850	2880	49	5A9	3% py stringers + blebs assoc. w/ qtz bands —

DDH 81-VX-01 (2 / 8)

Cyprus Anvil Mining Corp.

Lithologic Log

Logged By: PN

Code	From	To	Unit	Code	Description
1	10 14	16 20	22 23	25 27	
					almost a 4A texture;
L	288.0	289.1	5,0	5,DH3	; buff bleached colour; 5DO 288.9 - 289.1 m
L	289.1	341.1	75,1	5A,9	variably slightly calcareous; 3% py stringers + blebs assoc. w/ qtz bands (almost a 4A texture → as unit 49); buggered up texture 300.8 - 303.8 m; 090 300.2 - 300.3, 300.9 - 301.0 m; 5A* texture?; 10% gouge; brxiated 5D4 325.0 - 335.5 m;
L	341.1	343.8	52	3,B3	slightly bleached; 3% po blebs; w/ green chl. bands not quite 4L; calcareous; [5DO];
L	343.8	351.30	53	3,B10	Calc. bands <1 to 3 cm. wide w/ up to 0.5 m spacings; 3% po blebs;
L	351.30	351.43	54	5A,16	brxia; siliceous + 5D4 frags. in graph. matrix 353.5 - 354.3 m; slightly calc; 3BO as unit 53 353.7 - 353.8 m;
L	351.43	351.78	55	3,B3	calcareous + numerous calc. t.q fillings; brxia 354.3 - 354.4 m; 1-2% po blebs; dk. green;
L	351.78	361.05	56	3,B,0	slightly altered w/ sericite bands; qtz content incr. towards bottom of interval;
L	361.05	362.66	57	3,B3	as unit 55;
L	362.66	364.00	58	3,B,0	as unit 56; <1% py blebs; non-siliceous;
L	364.00	364.88	59	5A,9	4% py blebs assoc. w/ qtz bands & py stringers; almost a 4A texture; non-calc;
L	364.88	367.79	60	3,B3	slightly altered 3B as iterbands; numerous calc. t.q. fillings; somewhat tuffaceous-looking; 369 367.8 - 367.9 m;
L	367.79	375.4	61	3,C3	w/ calc. blebs; 3% py blebs;
L	375.4	378.0	62	3,B,0	<1% po stringers; brxia 375.8 - 376.3; gouge 376.3 - 376.5 m; numerous calc. t.q fillings;
L	378.0	378.9	63	3,B3	
L	378.9	382.1	64	3,F8	chl/mitic w/ calc. iterbands; 4% po blebs;
L	382.1	383.0	65	3,B4	sericitic-altered chl. phyllite, calc. w/ po blebs
L	383.0	385.4	66	3,B0	
L	385.4	386.2	67	3,B4	as unit 65;
L	386.2	389.4	68	3,D,4	non-calc; highly siliceous w/ purple bt bands;

DDH 81-VX01 (2–8)

Cyprus Anvil Mining Corp.

Lithologic Log

Logged By: PN

Code (1)	From (10–14)	To (16–20)	Unit (22–23)	Code (25–27)	Description
L	3894	3950	69	3B4	slightly bleached; <1% mariposite; ~2% po blebs; non-calc; graphitic interbands 394.6 - 395.0m;
L	3950	4027	70	5A6	bxia as unit 54;
L	4027	4105	71	5A6	80% gouge, 20% bxia
L	4105	4243	72	5A6	bxia as unit 70; 10% gouge;
L	4243	4311	73	5A6	[3F0]; 1-2% py stringers;
L	4311	4321	74	3C4	bleached w/ chl, mariposite; calc. blebs; lt. green;
L	4321	4341	75	5A6	bxia as unit 70;
L	4341	4352	76	4L0	[3B4? 5B48?]; non-calc; bxia 434.5 - 435.8m. w/ qtz lenses in 4L groundmass;
L	4352	4390	77	3G9	bxia 435.2 - 435.8m; non-calc; OQO 436.6 - 437.0m; bxia 438.5 - 439.0 w/ large (<5 cm) angular qtz frags. in phyllite groundmass;
L	4390	4414	78	3B4	slightly altered; lt green colour; numn 5A6 interbands (10% 5A); bxia 439.3 - 440.8m; numerous calc. t.g. fillings;
L	4414	4432	79	3G9	as unit 77; 1% py;
		EOH			

DDH 81-VX01 (2 / 8)

Cyprus Anvil Mining Corp.
Structural Log

Logged By: PN

Code	From	To	Feature	Sym	S_1 Dip Direct.	S_2 Dip Direct.	Description
1	10 14	16 20	22 24	26	28 32	34 38	
S		476	CSZ			74 230	
S		532	CSZ			56 230	
S		607	CSZ			79 230	
S		680	CSZ			70 230	
S		767	CSZ			71 230	
S		857	CSZ			64 230	
S		961	CSZ			58 230	
S		1031	CSZ			37 230	
S		1084	CSZ			46 230	
S		1142	CSZ			45 230	
S		1234	CSZ			45 230	
S		1298	CSZ			36 230	
S		1401	CSZ			43 230	
S		1450	CSZ			35 230	
S		1613	CSZ			11 230	
S		1661	CSZ			51 230	
S		1731	CSZ			58 230	
S		1843	CSZ			37 230	
S		1907	CSZ			37 230	
S		1962	CSZ			30 230	
S		2011	CSZ			70 230	
S		2066	CSZ			66 230	
S		2134	CSZ			51 230	
S		2183	CSZ			30 230	
S		2238	CSZ			49 230	
S		2299	CSZ			43 230	
S		2360	CSZ			40 230	
S		2392	CSZ			37 230	
S		2449	CSZ			61 230	
S		2505	CSZ			42 230	
S		2572	CSZ			62 230	
S		2628	CSZ			64 230	
S		2705	CSZ			65 230	
S		2754	CSZ			75 230	
S		2810	CSZ			46 230	
S		2833	CSZ			44 230	

DDH 81-VX01 (2 / 8)

Cyprus Anvil Mining Corp.
Structural Log

Logged By: PN

Code	From	To	Feature	Sym	S_1 Dip Direct.	S_2 Dip Direct.	Description
1	10 14	16 20	22 24	26	28 32	34 38	
S		2816	CS2			20 230	
S		2895	CS2			58 230	
S		2943	CS2			55 230	
S		3010	CS2			37 230	
S		3015	CS2			14 230	
S		3108	CS2			36 230	
S		3171	CS2			24 230	
S		3223	CS2			49 230	
S		3277	CS2			33 230	
S		3330	CS2			58 230	
S		3372	CS2			39 230	
S		3408	CS2			47 230	
S		3460	CS2			60 230	
S		3518	CS2			50 230	
S		3568	CS2			60 230	
S		3601	CS2			27 230	
S		3643	CS2			39 230	
S		3670	CS2			46 230	
S		3742	CS2			19 230	
S		3771	CS2			51 230	
S		3800	CS2			39 230	
S		3847	CS2			26 230	
S		3990	CS2			37 230	
S		4262	CS2			61 230	
S		4326	CS2			41 230	
S		4380	CS2			58 230	
S		4431	CS2			49 230	
S		EOH					

DDH 81-VX-01 (2 / 8)

Cyprus Anvil Mining Corp.
Geochemical Log (Sampler's Copy)

Logged By: PN

Sampled By:

Code	From	To	Sample No.	Description		
1	10 14	16 20	22 27	LENGTH	RECOVERY	UNIT
P	518	529	19611	1.1	1.1	4A4
P	529	536	19612	0.7	0.7	4CD
P	536	552	19613	1.6	1.2	4C8
P	552	569	19614	1.7	1.6	4C8
P	874	890	19615	1.6	1.5	4G48
P	890	906	19616	1.6	1.7	4G48
P	906	921	19617	1.5	1.5	4G48
P	921	933	19618	1.2	1.1	4K38