015038

GROM

SECTION 80W

2 of 3

SECTION 80W

75 A069

DRILL HOLE	:	FAGA069
NORTHING	:	905,159.2
EASTING	:	592,206.1
ELEVATION	:	1,302.5
TOTAL DEPTH	:	410.3
SECTION	:	W 80
R.F.E.	:	S2
RFE DIRECTION:		230
PLUNGE ANGLE :		11
PLUNGE DIRECT:		312
DHD CALC:		0
SS CALC:		0

DETAIL RECORD COUNTS:

NOS ORE-SAMPLES:	76
NOS DOWN-H-SURVEYS:	4
NOS DOWN-H-LITHOLOGY:	108
NOS DOWN-H-STRUCTURE:	85
NOS DOWN-H-FAULTS:	25
NOS DOWN-H-SPLINES:	4
NOS COMPOSITES:	0

DDH: FAGA069 UTM-N: 905,159.2 UTM-E: 592,206.1 UTM-ELEV: 1,302.5 TOTAL DEPTH: 410.3 SECTION: W 80
RFE: S2 RFE DIR: 230 PLUNGE ANGLES: 11 312 DHD CALC: 0 SS CALC: 0

DEPTHS FROM	DEPTHS TO	SAMPLE NO.	INT.	REC.	ROCK UNIT	ASSAYS S.G. PULP	CU %	PB %	ZN %	AG(AA) G/MT	AG(FA) G/MT	AU(FA) G/MT	PO %	PY %	TOT FE	BAO %	HG %	MN %	AS %	BA %	S.G. W.R.
137.8	138.6	91022	.8	.8	4D4			6.31	8.39	91.90											
138.6	139.1	08359	.5	.5	4C0		.19	.77	1.05	24.00											
139.1	140.1	08360	1.0	1.0	4A3	3.59	.15	.35	.37	13.00		.69	1	22	24						
140.1	140.7	08361	.6	.5	4D4	3.92	.24	6.30	5.10	100.00		2.06	2	20	23						
140.7	142.5	08362	1.8	1.7	4C3	4.02	.25	.47	.55	23.00		1.44	2	29	32						
142.5	143.7	08363	1.4	1.2	4A3	3.50	.11	1.07	1.54	28.00	28.00	1.58	1	19	21						
144.3	146.6	08364	2.3	2.2	4A4	3.41	.08	3.90	6.00	68.00		1.58	1	12	14						
146.6	148.3	08365	1.7	1.7	4A4	3.77	.19	2.50	4.90	45.00		1.37	1	16	18						
148.3	149.4	08366	1.1	1.0	4A0	3.43	.11	1.10	1.90	27.00		1.71		17	17						
149.4	151.2	08367	1.8	1.8	4A4	3.24	.04	1.98	3.50	37.00		.82		9	10						
151.2	153.0	08368	1.8	1.8	4L0	2.97	.02	.32	.60	6.00		.55	1	1	2						
153.0	154.8	08369	1.8	1.8	4A10	2.98	.03	.69	.48	11.00		.69		5	6						
154.8	157.1	08370	2.3	2.2	4A10	2.94	.04	.59	.59	8.00		.75		5	5						
157.1	159.1	08371	2.0	2.0	4A10	2.93	.03	.94	1.79	18.00		.69		1	1						
159.1	160.8	08372	1.7	1.6	4L4	3.04	.04	1.62	2.00	28.00		.69	1	2	4						
160.8	162.2	91023	1.4	.0	4D0			2.43	4.62	35.30											
162.2	162.7	08373	.5	.5	4L24		.23	.39	1.26	9.00											
162.7	164.8	08374	2.1	2.1	4A10		.13	.80	1.70	20.00											
164.8	166.7	08375	1.9	1.9	4A10		.09	.25	.48	6.00											
166.7	168.4	08376	1.7	1.7	4A10		.09	.41	.90	8.00											
168.4	168.9	08377	.5	.4	5C4*	3.12	.02	1.44	5.70	23.00	24.00	.41	4	2	6						
168.9	170.0	08378	1.1	1.1	4A14	3.38	.04	1.84	4.60	34.00		1.10	1	12	13						
170.0	170.7	08379	.7	.7	4L24	3.27	.05	.46	1.03	9.00		.34	3	5	8						
172.2	174.0	08380	1.8	1.8	4A14	3.28	.10	2.40	4.40	39.00		1.03	1	8	10						
174.0	175.9	08381	1.9	1.8	4A10	3.13	.10	1.74	1.90	29.00		.96	1	5	6						
175.9	177.5	08382	1.6	1.6	4A10	3.11	.06	1.14	1.87	22.00		.75		5	6						
177.5	179.3	08383	1.8	1.7	4A14	3.11	.02	1.95	4.80	38.00		.55	1		1						
179.3	181.1	08384	1.8	1.8	4A10	2.96	.03	1.46	3.00	28.00		.41			1						
181.1	183.5	08385	2.4	1.8	4A10	3.08	.02	1.41	2.60	25.00		.41			1						
183.5	184.8	08386	1.3	1.3	4A10	2.98	.02	1.36	2.05	21.00		.82		1	1						
184.8	186.8	08387	2.0	1.8	4A10	2.98	.03	.45	1.17	6.00		.41			1						
186.8	188.7	08388	1.9	1.8	4A10	2.84	.04	1.84	3.10	31.00	34.00	.69	1	2	3						
188.7	190.2	08389	1.5	1.5	4A14	3.13	.03	1.71	4.00	36.00		.41		2	3						
190.2	191.7	08390	1.5	1.5	4A14	3.00	.02	1.74	3.30	28.00		.34	1		1						
191.7	193.8	08391	2.1	1.8	4A10	2.97	.02	1.05	2.02	18.00		.41			1						
193.8	196.2	08392	2.4	2.2	4A10	2.99	.02	1.32	2.80	24.00		.27	1		1						
196.2	198.1	08393	1.9	1.9	4A14	3.01	.03	1.77	3.60	32.00		1.17	1		1						
198.1	200.2	08394	2.1	2.0	4A10	3.05	.03	1.39	3.10	30.00		.82			1						
200.2	202.1	08395	1.9	1.9	4A10	3.17	.02	1.14	3.70	23.00		.62		2	3						
202.1	204.1	08396	2.0	2.0	4A10	2.98	.02	1.38	3.30	29.00		.55		1	2						
204.1	205.7	08397	1.6	1.6	4A10	3.27	.03	.01	1.83	23.00		.89	1	12	13						
205.7	207.3	08398	1.6	1.6	4A10	3.20	.02	.94	2.90	32.00	32.00	.89	1	10	12						
207.3	209.2	91024	2.0	1.8	4A4			2.30	5.58	44.20											

DDH: FAGAC69 UTM-N: 905,159.2 UTM-E: 592,206.1 UTM-ELEV: 1,302.5 TOTAL DEPTH: 410.3 SECTION: W 80
RFE: S2 RFE DIR: 230 PLUNGE ANGLES: 11 312 DHD CALC: 0 SS CALC: 0

DEPTHS FROM	DEPTHS TO	SAMPLE NO.	INT.	REC.	ROCK UNIT	ASSAYS S.G. PULP	CU %	PB %	ZN %	AG(AA) G/MT	AG(FA) G/MT	AU(FA) G/MT	PO %	PY %	TOT FE	BAO %	HG %	MN %	AS %	BA %	S.G. W.R.
220.2	221.4	91025	1.2	.9	4A04			8.58	24.07		111.10										
222.1	222.5	07954	.4	.4	4A0	3.02	.02	1.32	2.70	21.00		1.30	2	3	6						
222.9	223.8	91026	.9	.9	4A4			5.74	14.43	105.90											
231.3	232.2	91027	.9	.9	4D4			9.25	19.60	145.00											
232.2	234.1	07955	1.9	1.9	4A14	3.50	.11	3.10	4.90	51.00		2.13	1	16	17						
234.1	236.0	07973	1.9	1.9	4A10	3.14	.08	1.81	2.60	34.00		1.23	1	11	12						
237.7	239.4	07956	1.7	1.6	4A14	3.09	.15	3.70	5.20	64.00	63.00	1.51	1	10	11						
239.4	240.4	07957	1.0	1.0	5B69	2.90	.01	.42	1.75	8.00		.48	2		3						
241.8	243.4	07958	1.6	1.6	4A10	3.00	.08	1.40	2.50	23.00		1.03	1	4	5						
304.6	305.1	07959	.5	.5	4A10	3.10	.07	.66	1.11	17.00		1.23		10	11						
305.1	306.8	07960	1.7	1.6	4G4#	4.45	.15	5.10	10.40	91.00		2.06	1	21	22						
306.8	307.8	07961	1.0	.9	4E4	4.45	.31	3.10	3.70	56.00		2.67	1	32	33						
307.8	308.5	07962	.7	.5	4G4#	4.60	.18	5.40	7.50	95.00		2.26		29	29						
308.5	309.4	07963	.9	.9	4E4	4.45	.18	4.00	3.40	57.00		1.99	1	31	33						
309.4	309.8	07964	.4	.4	4G4#	4.57	.25	7.70	8.40	117.00		3.09		28	29						
309.8	310.7	07965	.9	.9	4E4#	4.58	.26	4.90	5.90	78.00		2.54		33	34						
310.7	312.4	07966	1.7	1.7	4E4#	4.23	.17	3.60	4.10	72.00	60.00	1.58		32	33						
312.4	314.2	91028	1.8	1.8	4E4			5.95	9.13	83.60											
314.2	315.3	91066	1.1	1.1	4E4			5.48	9.51	82.60											
315.5	317.3	07967	1.8	1.7	4A14	3.18	.07	2.60	3.50	40.00		1.30	1	13	14						
317.3	320.3	07968	3.0	3.0	4A14	3.22	.06	2.70	3.40	41.00		1.44		8	9						
320.3	323.1	07969	2.8	2.8	4A10	3.20	.10	1.01	1.15	26.00		1.23		14	15						
323.1	326.3	07970	3.2	3.2	4A10	3.04	.09	.41	.49	15.00		.82		14	14						
334.9	337.0	90266	2.1	.0	4L2			.82	1.56		14.10										
339.5	342.6	90267	3.1	.0	4L2			.62	1.11		12.00										
350.8	352.3	90268	1.5	.0	4L1			.23	.25		2.10										
352.5	353.9	07971	1.4	1.4	4LH	3.64	.17	2.40	2.60	33.00		.27	10	16	27						
353.9	355.2	07972	1.3	1.3	4LH	3.41	.14	2.50	2.20	32.00		.14	9	15	24						
WEIGHTED AVERAGE																					
137.8	143.9		6.1	5.7		2.96	.16	1.95	2.26	39.20	6.42	1.10	1	16	20						
144.3	170.7		26.4	24.5		2.26	.06	1.33	2.36	24.16	.45	.66		5	6						
172.2	207.3		35.1	33.4		3.06	.03	1.40	2.91	26.84	3.29	.64	1	2	3						
207.2	219.9		12.7	12.0		2.84	.02	2.46	5.10	44.33		.67	1	9	11						
220.2	221.4		1.2	.9				8.58	24.07		111.10										
222.1	222.5		.4	.4		3.02	.02	1.32	2.70	21.00		1.30	2	3	6						
222.9	223.8		.9	.9				5.74	14.43	105.90											
231.3	236.0		4.7	4.7		2.68	.07	3.75	6.78	62.12		1.35	1	11	12						

DDH: FA3A069 UTM-N: 905,159.2 UTM-E: 592,206.1 UTM-ELEV: 1,302.5 TOTAL DEPTH: 410.3 SECTION: W 80
RFE: S2 RFE DIR: 230 PLUNGE ANGLES: 11 312 DHD CALC: C SS CALC: 0

DEPTHS FROM	DEPTHS TO	SAMPLE NO.	INT.	REC.	ROCK UNIT	ASSAYS S.G. PULP	CU %	PB %	ZN %	AG(AA) G/MT	AG(FA) G/MT	AU(FA) G/MT	PO %	PY %	TOT FE	BAO %	HG %	MN %	AS %	BA %	S.G. W.R.
237.7	240.4		2.7	2.6		3.01	.09	2.48	3.92	43.25	39.66	1.12	1	6	8						
241.3	243.4		1.6	1.6		3.00	.08	1.40	2.50	23.00		1.03	1	4	5						
304.6	315.3		10.7	10.3		3.17	.14	4.65	6.80	76.42	9.53	1.52		20	21						
315.5	326.3		10.8	10.7		3.15	.08	1.56	1.97	29.24		1.17		12	13						
334.9	337.0		2.1	.0				.82	1.56		14.10										
339.5	342.6		3.1	.0				.62	1.11		12.00										
350.8	352.3		1.5	.0				.23	.25		2.10										
352.5	355.2		2.7	2.7		3.52	.15	2.44	2.40	32.51		.20	9	15	25						

DDH: FAGA UTM-N: 905,159.2 UTM-E: 592,206.1 UTM-ELEV: 02.5 TOTAL DEPTH: 410.3 SECTION: W 80
RFE: S2 RFE DIR: 230 PLUNGE ANGLES: 11 312 DHD _C: 0 SS CALC: 0

DEPTH	ZENITH	AZIMUTH
0.000	180.000	0.000
122.500	172.000	133.600
244.500	170.000	133.600
366.400	175.000	173.000

DDH: FAGA069 UTM-N: 905,159.2 UTM-E: 592,206.1 UTM-ELEV: 1,302.5 TOTAL DEPTH: 410.3 SECTION: W 80
RFE: S2 RFE DIR: 230 PLUNGE ANGLES: 11 312 DHD CALC: 0 SS CALC: 0

DEPTH	UNIT	CODE	DESC	RECOVERY	IND
11.3	0001			0.0	1
38.3	0002	586	(5D0) MINOR	0.0	1
49.2	0003	5D0		0.0	1
62.9	0004	586		0.0	1
66.3	0005	5D0		0.0	1
110.3	0006	583		0.0	1
119.1	0007	580		0.0	1
125.0	0008	586		0.0	1
129.2	0009	580		0.0	1
130.2	0010	5C4*		0.0	1
133.4	0011	580		0.0	1
137.6	0012	5B21	89	0.0	1
138.6	0013	4D4	(4E4?) NO CORE	0.0	1
139.1	0014	4C0		0.0	1
140.1	0015	4A3		0.0	1
140.7	0016	4D4		0.0	1
142.5	0017	4C3		0.0	1
143.9	0018	4A30	NO CORE IN PART	0.0	1
144.3	0019	5C4a		0.0	1
151.2	0020	4A4	83 80	0.0	1
153.0	0021	4L0		0.0	1
159.1	0022	4A10	PHYLLITIC (3G2)	0.0	1
160.8	0023	4L4	[4C0?]	0.0	1
162.2	0024	4D0?	NO CORE	0.0	1
162.7	0025	4L24		0.0	1
166.4	0026	4A10	PHYLLITIC 83 89 (4D0)	0.0	1
168.9	0027	5C4*		0.0	1
170.0	0028	4A1	PHYLLITIC 84	0.0	1
170.7	0029	4L0	[4L24]	0.0	1
172.2	0030	5B6	89	0.0	1
207.3	0031	4A1	PHYLLITIC 84	0.0	1
209.2	0032	4A4	NO CORE	0.0	1
213.2	0033	4D45	(4A3)(4C#) 70:30:TRACE	0.0	1
219.9	0034	4K0	84 (5D4)	0.0	1
220.2	0035	4L0		0.0	1
221.4	0036	4AD4?	NO CORE	0.0	1
222.1	0037	5A19		0.0	1
222.5	0038	4A0		0.0	1
222.9	0039	5A19	6	0.0	1
223.8	0040	4A4?	(4D4 SERICITIC)?	0.0	1
225.2	0041	5A19		0.0	1
227.5	0042	586	(4D4) MINOR	0.0	1
230.1	0043	5A19	(4A0)(4D4) BOTH MINOR	0.0	1
231.3	0044	4L64		0.0	1
232.2	0045	4D4?	SERICITIC NO CORE	0.0	1
236.0	0046	4A1	8384 (4L0)	0.0	1
237.7	0047	5B64	(1QQ0)	0.0	1
239.4	0048	4A14	PHYLLITIC (3G2)	0.0	1
240.4	0049	5B61	89	0.0	1
241.8	0050	5B46		0.0	1
243.4	0051	4A10	PHYLLITIC	0.0	1

DDH: FAGA069 UTM-N: 905,159.2 UTM-E: 592,206.1 UTM-ELEV: 1,302.5 TOTAL DEPTH: 410.3 SECTION: W 80
RFE: S2 RFE DIR: 230 PLUNGE ANGLES: 11 312 DHD CALC: 0 SS CALC: 0

DEPTH	UNIT	CODE	DESC	RECOVERY	IND
244.8	0052	5B46		0.0	1
250.5	0053	3G0	(5D4* -> 5D6)	0.0	1
253.7	0054	5DC	(5D6)(5B&6[3G&])33:33:33 & BIO	0.0	1
263.0	0055	3G0	&9(10Q0)(5D0)80:15:05 STRINGER	0.0	1
263.4	0056	4L	&1&2&4&7&6 AFTER 3G STRINGERED	0.0	1
265.2	0057	3G0	(10Q0) 60:40 STR.	0.0	1
267.0	0058	4L	&1&2&4&7&6 STR.	0.0	1
269.0	0059	3G0	&9 (10Q$) 95:05 STR. & SPECK	0.0	1
270.1	0060	10Q0	&$ (5D4*)(4LC) 60:20:20	0.0	1
290.2	0061	3GC	(5D4$)(10Q0&$) 90:05:05 SPECK	0.0	1
291.2	0062	3B3	[5D0]	0.0	1
303.6	0063	3G0	&9 (3B$) 90:10	0.0	1
304.6	0064	4L2	&1 (3G4)(3G0&9)(5C4$)	0.0	1
305.1	0065	4A10	PHYLLITIC	0.0	1
306.8	0066	4G4#	(5D4*) TRACE	0.0	1
307.8	0067	4E4	(5C*)	0.0	1
308.5	0068	4G4#		0.0	1
309.4	0069	4E4	(5D0)	0.0	1
309.8	0070	4G4#		0.0	1
312.4	0071	4E4#	(4G4)	0.0	1
315.5	0072	4E4	NO CORE	0.0	1
320.3	0073	4A1	&3&4	0.0	1
326.3	0074	4A10		0.0	1
326.7	0075	4L2	&1	0.0	1
333.1	0076	3GC	&9 (10Q$)	0.0	1
334.4	0077	4L2	&1(5D4$)4L AFT 5D IN PT,BEIG &	0.0	1
339.5	0078	4C0	[4L12 &4] (10Q$)(5D4*)	0.0	1
342.6	0079	4A0	(4C0)	0.0	1
347.6	0080	4LC	&1&2 (10Q&$) 90:10	0.0	1
348.7	0081	3G0	&9&4	0.0	1
352.0	0082	4L2	&1&4 (3G4)(5D4*) 50:40:10	0.0	1
355.2	0083	4LH		0.0	1
360.4	0084	4L2	&1 &4 ->3G4 DOWNHOLE	0.0	1
360.4	0085	3G0	&9&4&6	0.0	1
364.7	0086	3G9	&6	0.0	1
366.3	0087	4L2	&1 (3G4) 50:50	0.0	1
365.9	0088	5C#	BIOTITE	0.1-	1
379.9	0089	4L0	&2 &6 AFTER 3G STR. & 5D	0.1-	1
384.4	0090	5C$	.	0.1-	1
387.4	0091	4LC	&1 &2 &6 AFTER 3G STR.	0.0	1
388.7	0092	5C$	.	0.1-	1
395.1	0093	4L24	&1 STR.	0.1-	1
398.1	0094	5C$	.	0.1-	1
399.1	0095	4L24	&1 (5D4*?)	0.1-	1
400.4	0096	5C$	.	0.1-	1
401.5	0097	4L2	&1 &6	0.1-	1
401.7	0098	5C$	.	0.1-	1
402.0	0099	4L2	&1 &6 STR.	0.1-	1
402.4	0100	5C$	.	0.1-	1
404.4	0101	4L2	&6 &1	0.1-	1
405.3	0102	5C$	.	0.1-	1

DDH: FAGA069 UTM-N: 905,159.2 UTM-E: 592,206.1 UTM-ELEV: 1,302.5 TOTAL DEPTH: 410.3 SECTION: W 80
RFE: S2 RFE DIR: 230 PLUNGE ANGLES: 11 312 DHD CALC: 0 SS CALC: 0

DEPTH	UNIT	CODE	DESC	RECOVERY	IND
407.6	0103	4L2	86 &1 AS ABOVE AD NAUSEUM	0.1-	1
408.2	0104	5C$	&4	0.1-	1
409.5	0105	4L2	86 &1	0.1-	1
409.8	0106	5C$	.	0.1-	1
410.2	0107	4L2	86 &1 (5C$) MINOR	0.1-	1
410.2	0109	4L2	&6&1 (5C$)	0.1-	1

DDH: FAGA069 UTM-N: 905,159.2 UTM-E: 592,206.1 UTM-ELEV: 1,302.5 TOTAL DEPTH: 410.3 SECTION: W 80
RFE: S2 RFE DIR: 230 PLUNGE ANGLES: 11 312 DHD CALC: 0 SS CALC: 0

DDH	F DEPTH	T DEPTH	FEAT	SYMTRY	S0 ANGLE	S0 DIRECT	S1 ANGLE	S1 DIRECT	S2 ANGLE	S2 DIRECT	RFE CDE	DHDC	SDC	PROCESS
FAGA069	0.0	13.4	CS2		0	0	0	0	70	230	0	1	0	0
FAGA069	11.3	19.2	CS2	Z	0	0	0	0	63	230	0	1	0	0
FAGA069	0.0	19.4	CS2		0	0	0	0	59	230	0	1	0	0
FAGA069	0.0	25.0	CS2		0	0	0	0	68	230	0	1	0	0
FAGA069	19.2	26.6	CS2	S	0	0	0	0	0	0	0	1	0	0
FAGA069	26.6	27.1	CS2	Z	0	0	0	0	0	0	0	1	0	0
FAGA069	0.0	31.4	CS2		0	0	0	0	74	230	0	1	0	0
FAGA069	0.0	37.4	CS2		0	0	0	0	75	230	0	1	0	0
FAGA069	27.1	41.3	CS2	S	0	0	0	0	0	0	0	1	0	0
FAGA069	41.3	41.9	CS2	Z	0	0	0	0	0	0	0	1	0	0
FAGA069	0.0	43.0	CS2		0	0	0	0	80	230	0	1	0	0
FAGA069	0.0	49.4	CS2		0	0	0	0	71	230	0	1	0	0
FAGA069	0.0	54.4	CS2		0	0	0	0	77	230	0	1	0	0
FAGA069	0.0	60.6	CS2		0	0	0	0	74	230	0	1	0	0
FAGA069	0.0	65.5	CS2		0	0	0	0	72	230	0	1	0	0
FAGA069	0.0	72.1	CS2		0	0	0	0	68	230	0	1	0	0
FAGA069	0.0	78.2	CS2		0	0	0	0	70	230	0	1	0	0
FAGA069	41.9	80.1	CS2	S	0	0	0	0	0	0	0	1	0	0
FAGA069	0.0	84.8	CS2		0	0	0	0	76	230	0	1	0	0
FAGA069	80.1	89.2	CS2	D	0	0	0	0	0	0	0	1	0	0
FAGA069	0.0	91.0	CS2		0	0	0	0	81	230	0	1	0	0
FAGA069	0.0	97.4	CS2		0	0	0	0	77	230	0	1	0	0
FAGA069	89.2	98.5	CS2	S	0	0	0	0	0	0	0	1	0	0
FAGA069	0.0	102.8	CS2		0	0	0	0	78	230	0	1	0	0
FAGA069	98.5	102.9	CS2	D	0	0	0	0	0	0	0	1	0	0
FAGA069	0.0	108.8	CS2		0	0	0	0	87	230	0	1	0	0
FAGA069	0.0	115.1	CS2		0	0	0	0	84	230	0	1	0	0
FAGA069	0.0	119.4	CS2		0	0	0	0	81	230	0	1	0	0
FAGA069	0.0	123.1	CS2		0	0	0	0	79	230	0	1	0	0
FAGA069	0.0	128.9	CS2		0	0	0	0	74	230	0	1	0	0
FAGA069	0.0	133.7	CS2		0	0	0	0	78	230	0	1	0	0
FAGA069	102.9	137.6	CS2	S	0	0	0	0	0	0	0	1	0	0
FAGA069	0.0	139.1	PS2		0	0	0	0	50	230	0	1	0	0
FAGA069	0.0	144.1	PS2		0	0	0	0	59	230	0	1	0	0
FAGA069	137.6	151.2	PS2	P	0	0	0	0	0	0	0	1	0	0
FAGA069	0.0	151.8	CS2		0	0	0	0	68	230	0	1	0	0
FAGA069	0.0	158.2	CS2		0	0	0	0	77	230	0	1	0	0
FAGA069	151.2	159.1	CS2	M	0	0	0	0	0	0	0	1	0	0
FAGA069	0.0	164.0	PS2		0	0	0	0	53	230	0	1	0	0
FAGA069	159.1	170.0	PS2	P	0	0	0	0	0	0	0	1	0	0
FAGA069	0.0	171.1	CS2		0	0	0	0	76	230	0	1	0	0
FAGA069	170.0	172.2	CS2	Z	0	0	0	0	0	0	0	1	0	0
FAGA069	172.2	221.3	PS2	P	0	0	0	0	0	0	0	1	0	0
FAGA069	0.0	222.1	CS2		0	0	0	0	72	230	0	1	0	0
FAGA069	221.3	225.9	CS2	Z	0	0	0	0	0	0	0	1	0	0
FAGA069	0.0	227.9	CS2		0	0	0	0	73	230	0	1	0	0
FAGA069	0.0	230.7	CS2		0	0	0	0	71	230	0	1	0	0
FAGA069	0.0	236.3	CS2		0	0	0	0	66	230	0	1	0	0
FAGA069	0.0	240.7	CS2		0	0	0	0	74	230	0	1	0	0
FAGA069	0.0	246.9	CS2		0	0	0	0	70	230	0	1	0	0
FAGA069	0.0	252.3	CS2		0	0	0	0	79	230	0	1	0	0

DDH: FAGA069 UTM-N: 905,159.2 UTM-E: 592,206.1 UTM-ELEV: 1,302.5 TOTAL DEPTH: 410.3 SECTION: W 80
RFE: S2 RFE DIR: 230 PLUNGE ANGLES: 11 312 DHD CALC: 0 SS CALC: 0

DDH	F DEPTH	T DEPTH	FEAT	SYMTRY	S0 ANGLE	S0 DIRECT	S1 ANGLE	S1 DIRECT	S2 ANGLE	S2 DIRECT	RFE CDE	DHDC	SDC	PROCESS
FAGA069	0.0	258.2	CS2		0	0	0	0	66	230	C	1	0	0
FAGA069	0.0	263.3	CS2		0	0	0	0	68	230	C	1	0	0
FAGA069	0.0	270.3	CS2		0	0	0	0	80	230	C	1	0	0
FAGA069	0.0	276.8	CS2		0	0	0	0	77	230	C	1	0	0
FAGA069	0.0	283.1	CS2		0	0	0	0	65	230	C	1	0	0
FAGA069	0.0	289.2	CS2		0	0	0	0	77	230	C	1	0	0
FAGA069	0.0	295.1	CS2		0	0	0	0	78	230	C	1	0	0
FAGA069	0.0	301.1	CS2		0	0	0	0	76	230	C	1	0	0
FAGA069	0.0	304.7	CS2		0	0	0	0	84	230	C	1	0	0
FAGA069	225.9	305.2	CS2	S	0	0	0	0	0	0	C	1	0	0
FAGA069	305.2	315.5	PS2	P	0	0	0	0	0	0	C	1	0	0
FAGA069	0.0	322.9	CS2		0	0	0	0	65	230	C	1	0	0
FAGA069	0.0	327.9	CS2		0	0	0	0	75	230	C	1	0	0
FAGA069	0.0	333.7	CS2		0	0	0	0	76	230	C	1	0	0
FAGA069	0.0	337.2	CS2		0	0	0	0	71	230	C	1	0	0
FAGA069	315.5	339.5	CS2	S	0	0	0	0	0	0	C	1	0	0
FAGA069	339.5	342.6	PS2	P	0	0	0	0	0	0	C	1	0	0
FAGA069	0.0	344.0	CS2		0	0	0	0	78	230	C	1	0	0
FAGA069	0.0	350.1	CS2		0	0	0	0	74	230	C	1	0	0
FAGA069	342.6	352.5	CS2	S	0	0	0	0	0	0	C	1	0	0
FAGA069	352.5	355.3	PS2	P	0	0	0	0	0	0	C	1	0	0
FAGA069	0.0	356.6	CS2		0	0	0	0	80	230	C	1	0	0
FAGA069	0.0	363.2	CS2		0	0	0	0	70	230	C	1	0	0
FAGA069	0.0	368.3	CS2		0	0	0	0	78	230	C	1	0	0
FAGA069	0.0	374.6	CS2		0	0	0	0	77	230	C	1	0	0
FAGA069	0.0	380.5	CS2		0	0	0	0	77	230	C	1	0	0
FAGA069	0.0	387.2	CS2		0	0	0	0	81	230	C	1	0	0
FAGA069	0.0	393.4	CS2		0	0	0	0	78	230	C	1	0	0
FAGA069	0.0	398.4	CS2		0	0	0	0	60	230	C	1	0	0
FAGA069	355.3	399.6	CS2	S	0	0	0	0	0	0	C	1	0	0
FAGA069	399.6	400.2	CS2	Z	0	0	0	0	0	0	C	1	0	0
FAGA069	0.0	404.2	CS2		0	0	0	0	75	230	C	1	0	0
FAGA069	0.0	408.4	CS2		0	0	0	0	70	230	C	1	0	0
FAGA069	400.2	410.3	CS2	S	0	0	0	0	0	0	C	1	0	1

DDH: FAGA069 UTM-N: 905,159.2 UTM-E: 592,206.1 UTM-ELEV: 1,302.5 TOTAL DEPTH: 410.3 SECTION: W 80
RFE: S2 RFE DIR: 230 PLUNGE ANGLES: 11 312 DHD CALC: 0 SS CALC: 0

DDH	F DEPTH	T DEPTH	FEAT	REC	CD	PARLL	UPPER PLANE		INTERNAL PLANE		LOWER PLANE		DHD
FAGA069	11.2	13.1	G				0	0	0	0	0	3	1
FAGA069	22.0	22.2	G				0	0	0	0	0	3	1
FAGA069	29.6	29.7	G				0	0	0	0	0	3	1
FAGA069	55.1	55.7	G				0	0	0	0	0	3	1
FAGA069	56.6	56.9	G				0	0	0	0	0	3	1
FAGA069	70.6	71.0	G				0	0	0	0	0	3	1
FAGA069	0.0	72.1	G				0	0	0	0	0	3	1
FAGA069	75.4	76.2	G				0	0	0	0	0	3	1
FAGA069	77.1	77.6	G				0	0	0	0	0	3	1
FAGA069	0.0	121.0	G				0	0	0	0	0	3	1
FAGA069	130.3	133.0	1GB				74	0	78	0	0	3	1
FAGA069	133.9	134.1	S				0	0	0	0	0	3	1
FAGA069	0.0	137.3	S				0	0	0	0	0	3	1
FAGA069	170.2	170.4	X				0	0	0	0	0	3	1
FAGA069	173.6	174.0	G				0	0	0	0	0	3	1
FAGA069	180.7	182.5	S				0	0	0	0	0	3	1
FAGA069	0.0	243.6	G				0	0	0	0	0	3	1
FAGA069	275.6	276.1	G				0	0	0	0	0	3	1
FAGA069	281.0	281.3	S				0	0	0	0	0	3	1
FAGA069	287.1	287.4	S				0	0	0	0	0	3	1
FAGA069	326.6	333.1	1XG				0	0	0	0	0	3	1
FAGA069	334.3	339.5	3BG				0	0	0	0	0	3	1
FAGA069	339.5	342.5	MF?	1			0	0	0	0	0	3	1
FAGA069	0.0	351.1	1G				0	0	0	0	0	3	1
FAGA069	363.9	364.6	B1G				0	0	0	0	0	3	1

CYPRUS ANVIL MINING CORPORATION

DIAMOND DRILL CORE LOG

Hole Number: 75-A069

Project: GRUM

Location: VANGORDA PLATEAU

Claim:

~~Terr.~~ UTM Plane Co-ords.: 6,905,159.25 N

1979 HIW Survey 592,206.08 E

Grid Co-ords.: 80W / 6N

1979 HIW Survey Elevation: 1302.5

Total Depth: 1346 ft

Fabric Orientation Diagram:

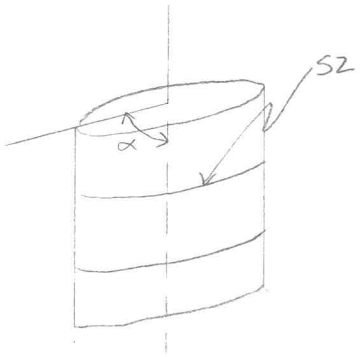

All symmetry determinations looking

NW with S2 dipping

SW with dip azimuth 230.

Purpose:

Logged by: RE PN Date(s) Logged: JUNE 18-21, 23-25 / 80

Drilling Contractor:

Core:

Size	From	To
BW	0	50'
BQ	50	1346'

Collar Cased and Capped:

Started: 27/4/75 Completed: 11/5/75

Cyprus Anvil Mining Corp.
Diamond Drill Core Log

DDH 75-A069
(2–8)

Code	Drillhole (2–8)	Elevation (10–16)	Northing (17–24)	Easting (25–32)	Comments (34–48)
T	75-A069	1302.5	9051591.2	592206.1	FEET

Code	Drillhole (2–8)	Depth (10–14)	Zenith Angle (22–26)	True Azimuth (28–32)	Comments (34–56)
R	75-A069	0	180.0	0.0	ATCOLLAR
R	75-A069	402.0	172.0	133.8	TROPARI
R	75-A069	802.0	176.0	133.6	
R	75-A069	1202.0	175.0	173.0	
R			.	.	
R			.	.	
R			.	.	
R			.	.	
R			.	.	
R			.	.	
R			.	.	
R			.	.	
R			.	.	
R			.	.	
R			.	.	
R			.	.	

Code	Drillhole (2–8)	Comments, Errant Remarks, Snivellings and/or Lewd Suggestions (10–47)

DDH FAGA069 (2–8)

Cyprus Anvil Mining Corp.

Lithologic Log

Page 1 of 4

Date: 29 Aug 82 Logged By: DSJ/GAJ

Code	From	To	Recov.	No.	Unit	Description
1	10–14	16–20	22–24	26–28	30–34	35
L	803	822		1	3GP	(SD4* → SD6) 5% or so U & L contacts of SD gradational (OQ*) 3G is weakly stringered no $CO_3^=$ – minor wisps of sphene near 806, intact
L	822	8323		2	SDO	(SD6)(SB86 [3G8]) subequal proportions intact, partly biotitic
L	8323	8630		3	3GO	±9 minor + stringered (OQO)(SDO bio) 80:15:5 OQO @ 835–845 as 3 1½' sections stringers, qtz-chl-ank w characteristic microselvedges.
L	863	8642		4	4L	±1 ±2 ±4 ±7 ±6 (no S!) relict stringer text & doubtless derived from above 3GO stringered.
L	8642	8700		5	3GO	stringered (OQO) 60:40 OQO = .2–.3m S_2 ∥
L	870	8760		6	4L	±1 ±2 ±4 ±7 ±6 as unit 4 – has chl qtz bio stringers in creme groundmass
L	8760	8825		7	3GP	±9 stringered and locally speckled (OQ* dol) 95:5 OQ* 1–5cm S_2 ∥ and or D_2 folded bands as usual.
L	8825	8860		8	OQP	±* dol (SD4*)(4LO) heavily veined intersection with 60% OQ* subequal SD & 4L – some 4L after SD
L	8860	9520		9	3GP	(SD4* dol)(OQO ±* dol) 90:5:5 SD4* 0.1–0.2 m av. thickness. OQO @ 924.5–927 + others scattered not well stringered but moderately speckled – poorly developed qtz sstn lams – ps_2 foliated
L	9520	9554		10	3B3	[SDO] intact normal.
L	9554	9960		11	3GP	±9 minor (3B* dol) 90:10 – M regions at 970 and 983 in 3B3's 4 3B3 bands
L	9960	9995		12	4L2	±1 (3G4)(3GO ±9)(SC4* dol) 60% 4L some from SD, 3G4 marginal to 6" relic of 3GO ±9 – some 4L from 3G. SC4* dol is 6" at EOI

DDH F.A.G.A.0.69 (2–8)

Cyprus Anvil Mining Corp.

Lithologic Log

Page 2 of ____

Date: ____ Logged By: ____

326.3

Code	From (10–14)	To (16–20)	Recov. (22–24)	No. (26–28)	Unit (30–34)	Description (35)
L	9995	10707		13	#	sulfides - core missing
L	10707	10718		14	4L2	±1
	10718	10929		15	3G0	±9 v. minor - similar to previous 3G but not stringered or speckled. weakly qtz $CO_3^=$ crackle bxted, (GO* dol) minor
L	10929	10997		16	4L2	±1 (SD4* dol) 4L partly derived from SD on textural basis ie: anomalous pinkish buff color and tends to be devoid of soil + xcutting qtz sulfide veinlets and is granular under handlens + associated with obvious SD. SD @ 1095 - 1096
L	10970	11140		17	4C0	[4L12 ±4] characteristic yellow green creme color - strongly banded where qtz sulfide bands present - homogenous $S^=$ species - bands sharp to diffuse contacts - not good extent - could be bleached min. wallrx - unit strongly broken and cut by (GO* dol) veins. (SD4*) minor - has fuchite and usual pinkish buff color.
L	11140	11240		18	4A0	shitty (4C0) rubble 1' recovered no gouge fault or mistatch???
L	11240	11403		19	4L0	±1±2 v minor (OQO±* dol) 90:10 alternating pinkish buff and light olive grey green bands strongly suggest bulk of unit derived from SD (3G4)(3G0±9) v local. Interleaved seq of tuffs and variably carbonaceous pelites now "bleached" probably by hydrothermal fluids. Well developed lithon struct in 4L ccp where after SD.
L	11403	11439		20	3G0	±9±4 v. weakly bleached 3G similar to rest of 3G in this hole. minor IND gouge @ 1152.

DDH FAGA069 (2–8)

Cyprus Anvil Mining Corp.

Lithologic Log

Page 3 of ____

Date: ____ Logged By: ____

Code	From	To	Recov.	No.	Unit	Description
1	10–14	16–20	22–24	26–28	30–34	35
L	11439	11550		21	4L2	±1 ±4 minor (3G4)(SD4*) 50:40:10
						progressively altd sequence of pelites
						with minor interbanded tuffs grading
						downward into good 4L in lower
						half of interval with good relict
						SD texture in 4L locally.
L	11550	11655		22	#	sulfides - core missing
L	11655	11728		23	4L2	±1 ±4 minor → downhole into 3G4 -
						altered halo around sulfide interval,
						identical to unit 21 but reversed.
L	11728	11824		24	3G0	±9 ±4 ± 6 minor G= wispy S_2 ll sphal
						@ 1182 v. weakly bleached continuation
						of altn envelope above
						(000) 5% intact - not stringered,
						possible ank (no ficz in 20%) in qtz
						siltstone ie. mottled or speckled but
						not well developed
L	11824	11965		25	3G9	±6 minor, G= S_2 ll sphal wisps randomly
						distrib thru unit best @ 1186-1187,
						intact except for last 2.5' broken
						with incip S_2 ll gouge.
						2" S_2 ll gouge @ 1195.6
L	11965	12007		26	4L2	±1 (3G4) 50:50 similar to unit
						21 etc. 3G4 in upper ½ 4L lower
						½ - some suggestion of relict
						SD in 4L
L	12007	12039		27	5C*	calc-biotitic - normal. intact. boring
L	12039	12261		28	4L0	±2 ±6 well developed relict 3G stringer
						texture and local probable relict
						SD - stringers are chl-bio-qtz
L	12261	12265		29	#	rabbits foot
L	12265	12467		30	4L0	±2 ±6 as unit 28 - lower half of
						intersection likely SD derived
						upper half with prominent stringers
						thus derived from 3G stringer. SD derived
						suspected sections not as strongly stringered.

1201.8

DDH FAGA069 (2–8)

Cyprus Anvil Mining Corp.

Lithologic Log

Page 4 of ____

Date: ____ Logged By: ____

Code	From	To	Recov.	No.	Unit	Description
1	10–14	16–20	22–24	26–28	30–34	35
L	12467	12613		31	SC*	dol dk green well banded – $CO_3^=$
						micro porphs. – banding ∥ S_1
L	12613	12710		32	4L0	±1±2±6 similar to above. – in generall
						looks as if derived from 36 str.
L	12710	12755		33	SC*	dol as unit 31, intact
L	12755	12965		34	4L24	±1 minor thinly banded qtz S= layers
						and dissem S= thru interval
						giving stringered appearance –
						stringers are qtz+py>po+gal+cpy.
						not as chloritic as unit 33.
						altn overprint on 36? – 3 v. high
						grade massive 4J veins at 1280.7
						=1" thick & 1282 = 4" thick & 1283 =
						½" thick
L	12965	13063		35	SC*	dol. – dk green – strongly banded – no fuch
L	13063	13095		36	4L24	±1 (SD4*?) ← some of unit that
						looks like derived from SD4* and
						here has minor fuchite associated.
L	13095	13139		37	SF*	dol. normal excellent lithon structure.
L	13139	13173		38	4L2	±1±6 color pinkish beige to grey
						green – PS_2 foliated – weakly
						stringered. – interpreted as SD
						and pelites bleached altntly could
						be 36 siltstones carbonated along
						with metavolcs (ie SC)
L	13173	13180		39	SC*	dol. as 37
L	13180	13190		40	4L2±	1±6 str as 38
L	13190	13203		41	SC*	dol. as 37
L	13203	13270		42	4L2	±6±1 as 38
L	13270	1330		43	SC*	dol. as 37
L	1330	13373		44	4L2	±6±1 as 38
L	13373	13395		45	SC*	dol ±4 mottled more heavily carbonated
						strongly fuchitic at FoI
L	13395	13438		46	4L2	±6±1
L	13438	13446		47	SC*	dol.
L	13446	13460		48	4L2	±6±1 minor SC* dol. in last 6 Meters of

hole – Jennings threw it out.

corrections

DDH A069 (2–8)

Cyprus Anvil Mining Corp.

Lithologic Log

Page _____ of _____

Date: _____ Logged By: PN; corrected JSM

Code	From	To	Recov.	No.	Unit	Description
1	10–14	16–20	22–24	26–28	30–34	35
	4375	4516		12	5B21	±9
	4516 (1376)	4546 (1386)		13	4D4	(4E4) ? No core Met test
	4546	4565 (1391)		13	4C0	
	4565	4597 (1401)		13	4A3	
	4597	4615 (1407)		13	4D4	
	4615	4674		13	4C0	
	4674	4720		14	4A43	(469.7-471.8 No core 4A43 High grade)
				15	5C4*	
				16	4A4	±3
	4962 (1512)	5020 (1530)		17	4L0	(minor sfds, minor phyll part)
	5020	5220		17	4A1	low grade phyll + C part + 3G2
	5220 (1591)	5277 (1608)		18	4L4	
	5277	5321 (1622)		18	4D4	? No core, met test
	5321	5339		18	4L2	
	5339	5525		19	4A1	±3 (4D0) phyll + C
				20	5C4*	
				21	4A1	±4 phyll + C
				22	4L0	
				23	5B6	
	5649 (1722)	6801 (2073)		24-25	4A1	±4 phyll + C
	6801	6865 (2092)		25	4A4	?? No core met test
	6865	6996 (2133)		25	4D45	(4A3) ((4C*))
	6996	7215 (2199)		26	4K0	(5D4)
	7215	7225 (2202)		26	4L0	
	7225	7263 (2214)		26	4AD4	? No core met tests High grade
	7263	7287		27	5A19	slightly calc
	7287	7301 (2225)		28	4A4	
	7301	7314		28	5A19	6
	7314	7344		29	4A4	(4D4 sericitic) ? No core met tests
	7344 (2229)	7389 (2252)		30	5A19	slightly calc
	7389	7465		31	5B6	(4D4)
				32	5A19	slightly calc (4A0)(4D4)
				33	4L6	
	7588 (2313)	7619 (2322)		34	4D4	ser. ? No core, met tests
	7619	7743		34	4A1	±3 ±4 (4L0) C + phyll
	7743 (2360)	7870 (2370)		35	5B64	(10Q0)

meters

feet

C. A. M. C. 1981 – E-3

Note: unit #'s should be changed to incorporate corrections if this log is to be sent to computer

corrections

DDH 2 8

Cyprus Anvil Mining Corp.

Lithologic Log

Page _____ of _____

Date: _____ Logged By: _____

Code	From	To	Recov.	No.	Unit	Description
1	10 14	16 20	22 24	26 28	30 34	35
		718 239 5 4		36	4A 1 4	phyll+c ±3G2
		718 240 6 4		37	5B 6 1	v. minor stds
				38	5B 4 6	
				39	4A 1 1	phyll low grade
				40	5B 4 6	
	810 244 3 7 0			41	5B 6 1	
				56	4L 7 1	(5C * mot @ fw)
				57	4A 1 1	low grade phyll + c
				58	4G 4 1 *	cc
				59	4E 4 1	(5C * mot)
				60	4G 4 1 *	
				61	4E 4 1	(5Do)
				612	4G 4 1 *	
	10 309 16 8 5	10 312 15 4 0		63	4E H 1 *	cc (4G4) (ankspots)
	10 215 0	10 315 2		63	4E 4 1	? No core mot tests
	10 315 2	10 320 10 3		64	4A 1 1	±3 ±4
	10 510	10 710 7		64	4A 1 1	
	11 516 4	11 655		712	4 4 4	
	11 655	18 26		72+73	5B 6 1	(4LO @ HW)

LCP Compilation / including corrections

DDH FAGA069 (2 – 8)

Cyprus Anvil Mining Corp.

Lithologic Log

Date: June/83 Logged By: _____

Code	From	To	Recov.	No.	Unit	Description
1	10 – 14	16 – 20	22 – 24	26 – 28	30 – 34	35
L		1113		1		O/B
L		1353		2	5B8	
L		1492		3	5D0	
L		1629		4	5B8	
L		1663		5	5D0	
L		1710 3		6	5B8	
L		1719 1		7	5B0	
L		1250		8	5B8	
L		1292		9	5B0	
L		1302		10	5D0 4	
L		1334		11	5B0	
L		1376		12	5B2	89
L		1386		13	4D4	(4E4)? No core
L		1391		14	4C0	
L		1401		15	4A3	
L		1407		16	4D4	
L		1425		17	4C0	
L		1439		18	4A4 3	
L		1443		19	5C4	@
L		1512		20	4A4	&3
L		1530		21	4L0	
L		1591		22	4A1	(3G2)
L		1608		23	4L4	~~(5E4?)~~
L		1622		24	4D4	? No core
L		1627		25	4L2	
L		1684		26	4A1	&3 (4D0)
L		1689		27	5C4	
L		1700		28	4A1	&4
L		1707		29	4L0	
L		1722		30	5B6	
L		2017 3		31	4A1	&4
L		2019 2		32	4A4	?? No core
L		2132		33	4D4 5	(4A3)(4C) 70:30:Tr
L		2199		34	4K0	(5D4)
L		2202		35	4L0	
L		2214		36	4A D4	? No core

LCP Compilation / including corrections

DDH FAGA069 (2 – 8)

Cyprus Anvil Mining Corp.

Lithologic Log

Date: June/87 Logged By: _____

Code	From	To	Recov.	No.	Unit	Description
1	10 – 14	16 – 20	22 – 24	26 – 28	30 – 34	35
L	12214	12212 1		137	5A119	
L		12225		138	4AH	
L		12229		139	5A1196	
L		12238		140	4AH	(4D4) ? No core
L		12252		141	5A119	
L		12275		142	5B6	(4D4)
L		12301		143	5A119	(4A0) (4D4) minor
L		12313		144	4L6	
L		12322		145	4D4	?? No core
L		12360		146	4A1	&384 (4L0)
L		12377		147	5B64	(1090)
L		12394		148	4A114	(3G2)
L		12404		149	5B6	
L		12418		150	5B46	
L		12434		151	4A1	
		12448		152	5B46	
		12489		153	5B6	
		12509		154	5B8	
		12536		155	5D0	
		12585		156	5B6	
		12621		157	5B8	
		12634		158	4L6	
		12652		159	5B6	
		12672		160	4L6	
		12690		161	5B6	
		12701		162	5D6	
		12716		163	5B6	
		12785		164	5B8	
		12903		165	5B6	
		12912		166	5D0	
		13037		167	5B86	(5D0) (4L6)
		13046		168	4L7	(5C$)
		13051		169	4A1	
		13068		170	4G4#	
		13078		171	4E4	(5C$)
		13085		172	4G4#	

NEW LOG

LCP Compilation /including corrections

DDH F.A.G.A.0.6.9 (2–8)

Cyprus Anvil Mining Corp.

Lithologic Log

Page 3 of ____

Date: ____ Logged By: ____

Code	From	To	Recov.	No.	Unit	Description
1	10–14	16–20	22–24	26–28	30–34	35
L	3085	3094		73	4E4	(5D0)
		3098		74	4G4#	
		3124		75	4E4#	(4G4)
		3155		76	4E4	?? No core
		3203		77	4A1	8384
		3263		78	4A1	
		3331		79	5B6	
		3395		80	4L2	(5D6)
		3426		81	4C0	
		3441		82	5B6	(10Q0)
		3483		83	4L0	(10Q0)
		3493		84	5B6	
		3525		85	4L1	
		3552		86	4L4	(5D0)
		3605		87	5B6	
		3628		88	5B2	(4A4)
		3648		89	5A9	
		3655		90	5B6	
		3809		91	4L0	
		3843		92	5D0	(10Q0)
		3879		93	4L0	
		3891		94	5C0	
		3951		95	4L0	
		3981		96	5C1	
		3990		97	4L7	
		4040		98	5D0	
		4060		99	4L7	
		4071		100	5C0	
		4103		101	4L0	(5C0)

DDH 75-A069

Cyprus Anvil Mining Corp.
Lithologic Log

Logged By: PN

Code	From	To	Unit	Code	Description
L	0 0	37 0	1		o/B
L	37 0	115 9	2	5B8	gougy (fault?) 37-43 ft.; minor po blebs; abundant thin qtz layers; minor 5D0 from 81.0-86.4 ft.; 109.7-111.5 ft.; gouge from 72.5-73'; 97.4-97.6';
L	115 9	161 4	3	5D0	w/ minor qtz veins
L	161 4	206 3	4	5B8	minor py blebs; gouge from 181.1-182.8; 185.8-187.0 ft;
L	206 3	217 5	5	5D0	minor thin qtz veins
L	217 5	362 0	6	5B8	incr. ankeritic staining from 356.9-362.0 ft; gouge from 231.8-233.0, at 236.7, 247.7-250.0; 253.0-254.7; numerous qtz veins, lenses & calcite fracture fillings
L	362 0	390 6	7	5B0	thin qtz bands; minor calcareous fracture fillings
L	390 6	410 2	8	5B8	gouge at 397.2 ft; minor qtz bands, calcite fracture fillings
L	410 2	423 9	9	5B0	thin qtz-calcite (ankerite) veins & fracture fillings
L	423 9	427 3	10	5D0 4	altered & bleached; much ankerite staining (tan colour); qtz lenses; sericitic
L	427 3	437 5	11	5B0	calcite fracture fillings; talcy; gouge at 427.6, 429.8, 431.4-431.8, 432.9-434.8 ft., and at 436.3 ft
CORRECTION L	437 5	451 6	12	~~4A0~~ 5B2 1±9	slightly calcareous; qtz-calcite fracture fillings; minor py; sheared from 439.5-440.1 ft., and at 450.6 ft.
CORRECTION L	451 6	467 4	13	~~4D3~~	minor graphite layers from 456-459.5 ft.; 8% PbZn; minor po; 452-454.6 No core anvil met test 4D4 (4E4?); 454.6-456.5 4C0; 456.5-459.7 4A3; 459.7-461.5 4D4; 461.5-467.4 4C0
SHOULD BE 5 units +4A43 L	467 4	472 0	14	4A3	5% PbZn; py abundant; massive in places. (469.7-471.8 No core met tests 4A43 high grade)
L	472 0	473 4	15	~~5D4~~ 5C4*	ank. marip. kaolinite highly altered; tan colour; w/ abundant mariposite,
CORRECTION L	* 473 4	496 2	16	4A3	~~5%~~ 10% PbZn; as ~~unit 14~~ No! Higher grade 4A4 ±3
CORRECTION 2 units L	496 2	522 0	17	~~4A1~~	less graphite & more siliceous than Unit 16; 2% PbZn; gray qtz 496.2-502 4L0 + minor stds, minor phyllitic partings; 502-522 4A1 phyll + C partings, +3G2 finely inter Low grade
L	522 0	533 9	18	~~4D3~~	4% PbZn; minor sericite layers; altered ~~5D1~~ (5C4*) w/ mariposite at 526.6 ft. 522-527.7 4L4; 527.7-532.1 No core met test 4D4?; 532.1-533.9 4L2
minor correction L	533 9	552 5	19	4A3	minor cpy in fractures at 535.9 ft; 4D0 536.2-537.8 ft.; 2% PbZn; rare cpy blebs scattered throughout unit [4A1 phyll + C partings ±3 (4D0)]
L	552 5	554 1	20	~~5D4~~ 5C4*	bleached white w/ abundant mariposite
L	554 1	557 6	21	4A3	5% PbZn; red sph [4A1 phyllitic + C partings ±4]
L	557 6	560 2	22	4L0	minor py, sph; breccia at 558.7-559.3 ft.
L	560 2	564 9	23	5B6	few qtz veins; minor py, sph, gal blebs;

DDH 75-A069 (2 – 8)

Cyprus Anvil Mining Corp.
Lithologic Log

Logged By: PN

Code	From	To	Unit	Code	Description
1	10 – 14	16 – 20	22 23	25 – 27	564.9-680.1 4A1 phyllitic + carbon partings ±4 686.5-699.6 4D45 (4A3) ↳ ~30% (4C*) ↳ small band
					680.1-686.5 No core met tests 4A4 ??
CORRECTION → 3 units L	564 9	571 0	24	~~4A0~~	1% PbZn; gouge from 569.6 - 571.0 ft.;
L	571 0	699 6	25	~~4A1~~	diss. py, sph, gal in qtz bands & stringers; minor calcareous blebs; sheared 593-599 ft; 5% PbZn; more abundant massive sulphides from 692.0 - 699.6 ft (13% PbZn)
CORRECTION Break into 3 units L	699 6	726 0	26	~~4L0~~	highly calcareous in areas (4K bands); 5% PbZn; 30% PbZn bet 722.5 - 726.3 ft; sericite-rich in areas; highly siliceous; minor po; well-banded sulphides below 714 ft; 4L0 w/ minor py from 721.0 - 722.5 ft. 4K0 (5D4) 699.6-721.5
correction L	726 0	728 7	27	5A~~6~~19	slightly calc w/ minor py, qtz-ankerite lenses; 721.5-722.5 4L0 ~~722.5~~ 726.3 No core met tests
CORRECTION → 2 units L	728 7	731 4	28	4A4	4% PbZn 728.7-730.1 4A4, 730.1-731.4 5A196 Highgrade 30% 4AD4?
CORRECTION L	731 4	734 4	29	~~4L6~~	~~18~~ 20% PbZn w/ 20% py; bleached white No core Met tests. Highgrade 4A4 (4D4 sericitic) ???
CORRECTION L	734 4	738 9	30	~~4A0~~	1% py, negligible PbZn; numerous qtz-ankerite layers; very thin py layers 5A19 slightly calc
L	738 9	746 5	31	5B6	minor py bands, qtz bands; qtz vein 739.4-740.0 ft.; light to med. grey; 4D4 from 744.8-744.9 ft. - 10% PbZn;
correction L	746 5	755 0	32	~~4A0~~	minor sph, gal in qtz layers; 4D4 from 751.1-751.6 ft (2% PbZn) 5A19 slightly calc w/ minor (4A0) + (4D4)
L	755 0	758 8	33	4L6	bleached white; minor py cubes, diss. sph
CORRECTION → 2 units L	758 8	774 3	34	4A4	16% PbZn bet. 758.8-761.9 ft; 5% PbZn below 761.9 ft.; minor calcite blebs; 4D4 bet. 764.6 - 765.0 ft. (10% PbZn); 4L0 from 770.2 - 770.7 ft; 758.8-761.9 No core met tests 4D4 ser? 761.9-774.3 4A1 ±3 ±4 (4L0) carbon + phyllitic partings
CORRECTION → L	774 3	780 0	35	~~4L6~~	large qtz veins from 777.6 - 777.9 ft; and 778.0 - 778.9 ft; numerous qtz lenses; thin graphitic layer at 775.6 ft; minor py & po blebs; thin ankerite layers → 5B64 (10Q0) CORRECTION
CORRECTION L	780 0	785 4	36	4A4	5% PbZn 4A14 phyllitic + C partings ± 3G2 finely interlam
CORRECTION L	785 4	788 6	37	~~4A1~~	less graphite + more siliceous than unit 36; 1% PbZn; 5B6 very minor stds
L	788 6	793 4	38	~~4L6~~	5B46 minor po-qtz bands; diss. py in fractures; talcy; 1% PbZn
L	793 4	798 6	39	4A~~4~~	2% PbZn 4A1 phyllitic low grade
L	798 6	803 0	40	~~4L6~~	minor po layers; ankerite blebs, gouge from 799.4 - 799.7 ft.; po-ankerite fracture fillings; thin qtz veins & blebs; 5B46
L	803 0	816 6	41	5B6	minor py, po, sph; qtz-ankerite fracture fillings; chlorite blebs assoc. w/ qtz veins;
***** L	816 6	823 3	42	5B8	ankerite fracture fillings; chloritic-po-qtz layers
note rest of hole relogged in 82 - follows L	823 3	832 0	43	5D0	w/ thin qtz-calcite layers; ankerite-qtz fracture fillings

DDH [redacted]-A069 (2 … 8)

Cyprus Anvil Mining Corp.
Lithologic Log

Logged By: PN

Code	From	To	Unit	Code	Description
1	10 14	16 20	22 23	25 27	
L	1813.2	1814.8	4 4	5 B 16	minor po, py blebs; 5DO from 833.2-833.8 ft; 844.3-845.9 ft; thin qtz bands as well as thick qtz veins present; OQO from 835.2-837.0 ft; 838.3-839.6 ft., 841.5-844.4 ft;
L	1814.8	1815.9	4 5	5 B 18	minor py, po, sph blebs; few qtz veins & fracture fillings; 5BB6
L	1815.9	1816.4	4 6	4 L 16	thin qtz-chlorite-po layers; 5BB from 861.9-863.0 ft;
L	1816.4	1817.0	4 7	5 B 16	numerous qtz bands; OQO from 867.2-868.3 ft, 869.5-869.8 ft; minor po, py, bt, ankerite
L	1817.0	1817.6	4 8	4 L 16	minor py, po, sph blebs; bt (?) layers;
L	1817.6	1818.2	7 4 9	5 B 16	minor gal, py; numerous qtz veins
L	1818.2	1818.6	5 0	5 D 16	altered 5D; tan colour w/ numerous qtz-ankerite lenses; minor py, ankeritic fracture fillings; grades into 4L0 at 884.8 ft.
L	1818.6	1901.6	5 1	5 B 16	minor py; numerous qtz-ankerite fracture fillings; few po bands; gouge from 905-906 ft;
L	1901.6	1911.3	5 2	5 B 18	numerous qtz veins w/ po blebs; 5DO from 908.6-908.9, 909.6-911.0, 913-913.8 ft; 5B86
L	1911.3	1915.2	5 3	5 B 16	numerous qtz-ankerite bands & py stringers; 5DO from 914.9-915.1, 915.5-915.9, 916.5-917.2, 919.8-920.5 ft.; sheared 922-923 ft.; qtz-po rich from 924.8-927.0 ft.; sheared 942-943 ft; more chloritic towards 952.5 ft.
L	1915.2	1915.3	5 4	5 D 10	w/ thin qtz-calcite bands
L	1915.3	1916.5	5 5	5 B 18	5B86; qtz-calcite lenses; minor graphite increases w/ depth; 4L6 from 972.1-973.0; 974-974.5 ft; 5DO from 969-970.3 ft.; 970.9-971.6 ft.; 981.5-982.0; 982.8-983.5 ft.; 990.4-991.2 ft.; 5A6 bet. 995.2-995.6 ft;
correction L	1916.5	1919.2	5 6	4 L ~~6~~ 7	4L7 (5C * mot @ f.w. minor py-po-qtz bands; 4A0 997.9-998.2 ft; mottled 5D16 w/ lenses of chlorite & calcite
correction L	1919.2	1101.0	5 7	4 A ~~4~~	2% PbZn; 10% Py; 4A1 phyllitic C partings low grade
L	1101.0	1101.6	5 8	4 G 14	13% PbZn; calcareous 4E4 4G4 * cc very minor thin marcasite partings
L	1101.6	1101.0	5 9	4 E ~~0~~	2% PbZn; minor cpy; mottled 5~~C~~B from 1006.7-1007.4 ft;
L	1101.0	1101.2	6 0	4 G 14	* as unit 58 4E4
L	1101.2	1101.5	6 1	4 E ~~0~~	minor PbZn (1%); 5DO from 1012.6-1012.8 ft, 1014.0-1014.5 ft;
L	1101.5	1101.6	5 6 2	4 G 14	* 5% PbZn; 1016.5-1025 4E4 * cc (4G4) (ank spots)
CORRECTION 2 UNITS L	1101.6	1103.5	6 3	4 K ~~6~~	10% PbZn, minor barite
L	1103.5	1107.0	7 6 4	4 A 14	3% PbZn 1025-1034.5 No core met tests 4E4 >

2 units

1035.2-1051 4A1 ± 3 ± 4
1051-1070.7 4A1
} mostly C partings

DDH 75-AD69 (2 / 8)

Cyprus Anvil Mining Corp.
Lithologic Log

Logged By: PN

Code	From	To	Unit	Code	Description
1	10 14	16 20	22 23	25 27	
L	1107 10 7	1101.9 12 9	6 15	5 B 16	minor py stringers, qtz lenses; 4L0 from 1092.9-1071.6 ft;
L	1092.9	1111.4 0	6 16	4 L 12	5D6 from 1092.9 - 1095.6 ft; 1% PbZn; highly siliceous from
					1110.2 - 1114 ft; 5D0 breccia w/ py matrix 1113.6 - 1114 ft;
L	1111.4 0	1112.4 0	6 17	4 C 10	minor graphite; brecciated w/ py, qtz & phyllite clasts;
					calcite fracture fillings;
L	1112.4 0	1112.9 0	6 18	5 B 16	OQO from 1125 - 1126.4 ft.; minor py blebs & stringers;
					medium grey
L	1112.9 0	1114.2 6	6 19	4 L 10	siliceous from 1129 - 1134 ft; minor chlorite gives sericite
					a light green colour; OQO from 1135.7-1136.2 ft; 1136.5-
					1137.3 ft; py stringers; massive py w/ po blebs 1137.8-
					1139.0 ft;
L	1114.2 6	1114.5 9	7 10	5 B 16	py stringers w/ po blebs
L	1114.5 9	1115.6 4	7 1	4 L 1	py bands & stringers; calcite fracture fillings; less
					siliceous from 1152 - 1156.4 ft; minor graphite from 1155.8 -
					1156.4 ft
L	1115.6 4	1116.6 5 5 7 2	7 2	4 L H	po-rich w/ py & lesser gal, sph; clasts of sericite
					& qtz; variably calcareous; 5D0 from 1161 - 1161.3 ft.;
					1162 - 1162.5 ft., 1164.1 - 1164.6 ft.; 1165.6 - 1167.2 ft;
L	1116.6 5 5 7 2	1118.2 6	7 3	5 B 16	light grey w/ chloritic & py bands; from 1167.2 - 1175 ft;
					med. grey w/ qtz veins & <1% PbZn from 1175 - 1182.6
					ft.; minor po & chl. bands 4L0[5B4] @ 7 ft H.W
L	1118.2 6	1119.0 2	7 4	5 B 12	4A4 from 855 - 87.0 ft; minor chlorite bands,
L	1119.0 2	1119.6 9	7 5	5 A 9	minor qtz veins, py bands, non calcareous
L	1119.6 9	1119.9 1	7 6	5 B 16	w/ qtz-ankerite lenses, py, gal & po blebs; non calcareous
L	1119.9 1	1214.9 7	7 7	4 L 10	minor py, po layers, gal. blebs, marcasite; scattered qtz-
					ankerite lenses; 1201.8 - 1204 ft. abundant bt, chlorite,
					calcite & qtz bands, generally dk. brown colour;
					increase in bt, chl bands bet. 1204 - 1222.4 ft;
					5% PbZn (mainly gal.) from 1241 - 1242 ft;
L	1214.9 7	1216.0 7	7 8	5 D 10	OQO 1250.5 - 1251.1 ft.; variable bt content
L	1216.0 7	1217.2 6	7 9	4 L 10	OQO 1268.3 - 1268.7 ft., plus smaller minor qtz bands;
					bt-rich 5D0 from 1262.5 - 1262.8 ft.; chlorite &
					bt-rich from 1269.3 - 1272 ft.;
L	1217.2 6	1217.6 5	8 10	5 C 10	not mottled; ankerite-qtz bands interlayered w/
					chlorite
L	1217.6 5	1219.6 4	8 1	4 L 10	py, po blebs & fracture fillings; py-po qtz bands

DDH 75-A069 (2–8)

Cyprus Anvil Mining Corp.
Lithologic Log

Logged By: PN

Code (1)	From (10–14)	To (16–20)	Unit (22–23)	Code (25–27)	Description
					throughout; 1281.6–1282.2 massive py-po overlying sph bands in 4LO.
L	12964	13062	82	5~~D~~C1	mot generally mottled, although normally laminated in places; numerous qtz bands throughout; minor py blebs
L	13062	13090	83	4L7	po-py-rich band bet. 1306.0–1306.2 ft.; py-po stringers in fractures & as thin layers; calcite fracture fillings; minor mariposite; minor cpy;
L	13090	13255	84	5D0	1309–1313.7 ft abundant thin qtz bands interlayered w/ chloritic layers; minor qtz veins; thin py, po bands; minor 4LO 1318–1318.8 ft;
L	13255	13320	85	4L7	po w/ lesser py, cpy in fractures; more chloritic bet. 1330.8–1332.0 where grading down into 5D.
L	13320	13356	86	5~~D~~C0	mot mottled 5D interlayered w/ more massive 5D; minor gal, py, po blebs.
L	13356	13460	87	4L0	po-rich band 1330.9–1331 ft.; minor py, po, sph, cpy bands; mottled 5D0 w/ mariposite 1337.9–1340.2 ft; 4A3 w/ po 1342.5–1342.7 ft.; mottled 5D0 1443.4–1444.7 ft; chloritic 4L from 1444.7 to EOH
		EOH			

DDH 75-A069 (2 / 8)

Cyprus Anvil Mining Corp.
Structural Log

Logged By: PN

Code	From	To	Feature	Sym	S_1 Dip Direct.	S_2 Dip Direct.	Description
1	10 14	16 20	22 24	26	28 32	34 38	
S							0-37 ft. O/B
S		1440	CSR			710 2310	
S		1630	FR	3		613	S sym. 63.0-87.2 ft.
S		1635	CSR			5A 2310	
S		1819	CSR			618 2310	
S		1872	FR	E			Z sym. 87.2-88.9 ft.
S		1889	FR	3			S sym. 88.9-135.4 ft.; D from 101.8-103.5 ft., and at 118.5 & at 131.6 ft; F4 at 109.6, 126.9 & at 127.6 ft;
S		1103	CSR			714 2310	
S		1226	CSR			715 2310	
S		1354	FR	E			Z sym. 135.4-137.4 ft.
S		1374	FR	3			S sym. 137.4-262.8 ft.; F4 at 141.8, 149.6, 205.1, 209.6, 223.3, 226.6, 260.4 & 261.8 ft; D zones at 154.2, 165.3, 177.1, 194.2-194.8, at 195.8, 205.6, 209.9, 219.9-221.4, 225.3 & at 258.8 ft.
S		1411	CSR			810 2310	
S		1622	CSR			711 2310	
S		1784	CSR			717 2310	
S		1989	CSR			714 2310	
S		2150	CSR			712 2310	
S		2365	CSR			68 2310	
S		2516	CSR			710 2310	
S		2628	FR	S			D region 262.8-292.6 ft.; minor S zones 267.2-267.6, 276.0-276.5, 277.2-278.0, 282.9-283.3 & at 285.8 ft.;
S		2718	CSR			716 2310	
S		2926	FR	D			S sym. 292.6-323.3 ft; minor D at 305.2 ft & 321.8 ft; Z sym. at 293.2 ft.;
S		2985	CSR			811 2310	
S		3195	CSR			717 2310	
S		3233	FR	S			D region 323.3-337.7 ft.; S3 at

DDH 75-A069 (2 / 8) Cyprus Anvil Mining Corp.

Structural Log

Logged By: PN

Code	From	To	Feature	Sym	S_1 Dip Direct.	S_2 Dip Direct.	Description
							324.0 ft;
S		33772	CSZ			78 2330	
S		33777	FZD				S sym. 337.7 - 451.6 ft; minor D regions at 353.0 ft, 366.6, 395.5, 401.9, & from 419.7 - 420.4 ft.; minor P at 373.9 ft;
S		35168	CSZ			87 2310	
S		35776	CSZ			84 2310	
S		39118	CSZ			81 2310	
S		40400	CSZ			79 2310	
S		42300	CSZ			74 2310	
S		43388	CSZ			78 2310	
S		45116	FZS				R region 451.6 - 496.2 ft; massive sulphides w/ highly altered SDO from 472.0 - 473.4 ft;
S		45163	PSZ			510 2310	
S		47128	PSZ			519 2310	
S		49162	FZR				M region 496.2 - 522.0 ft; S3 at 506.4, 512.5 ft; ambiguous symmetry from 513 - 522 ft; S/Z approx. 50/50.
S		49781	CSZ			618 2310	
S		51140	CSZ			717 2310	
S		52120	FZM				R region 522.0 - 557.6 ft.; massive sulphides including 4A w/ ambiguous symmetry
S		51380	PSZ			53 2310	
S		55576	FZR				Z sym. 557.6 - 564.9 ft; ambiguous region since few symmetry determinations made
S		56112	CSZ			716 2310	
S		56149	FZZ				R region 564.9 - 726.0 ft; massive sulphides;
S		72600	FZR				Z sym. 726.0 - 741.1 ft.; minor S sym. at 736.0 ft.;
S		72806	CSZ			712 2310	
S		74111	FZ3				S sym. 741.1 - 1001.4 ft; D at 832.7,

DDH 7.5-A.0.69 (2 / 8)

Cyprus Anvil Mining Corp.
Structural Log

Logged By: PN

Code	From	To	Feature	Sym	S_1 Dip Direct.	S_2 Dip Direct.	Description
1	10 14	16 20	22 24	26	28 32	34 38	
							865.8, @ 979.5 ft; F4 at 939.6 ft;
							S3 at 986.7 ft; min R at
							817.0 ft; min Z at 986.4 ft.;
S	17477	CSZ				713 2310	
S	17568	CSZ				711 2310	
S	17715	CSZ				616 2310	
S	17897	CSZ				714 2310	
S	18100	CSZ				710 2310	
S	18276	CSZ				719 2310	
S	18470	CSZ				616 2310	
S	18640	CSZ				618 2310	
S	18868	CSZ				810 2310	
S	19081	CSZ				717 2310	
S	19289	CSZ				615 2310	
S	19487	CSZ				717 2310	
S	19682	CSZ				718 2310	
S	19879	CSZ				716 2310	
S	19998	CSZ				814 2310	
S	10100 14	FIZS					R region 1001.4 – 1035.2 ft; massive
							sulphides;
S	10315 2	FIZ	R				S sym. 1035.2 – 1114.0 ft.; D at
							1081.5 ft; F4 at 1081.1, 1082.8 ft;
S	10595	CSZ				615 2310	
S	10758	CSZ				715 2310	
S	10947	CSZ				716 2310	
S	11064	CSZ				711 2310	
S	11140	FIZS					R region 1114.0 – 1124.0 ft; massive sulph.
S	11240	FIZ	R				S sym. 1124.0 – 1156.4 ft.; D
							from 1128.2 – 1128.7 ft, and at 1148.1 ft;
S	11285	CSZ				718 2310	
S	11487	CSZ				714 2310	
S	11564	FIZS					R region 1156.4 – 1165.6 ft; mainly
							massive sulphides & 15% non sulphide
							bearing rock.
S	11656	FIZ	R				S sym. 1165.6 – 1311.0 ft; D at
							1203.2 ft; ambiguous from 1287 – 1311 ft;

DDH 75-A069 (2 / 8)

Cyprus Anvil Mining Corp.
Structural Log

Logged By: PN

Code	From	To	Feature	Sym	S_1 Dip Direct.	S_2 Dip Direct.	Description
	10 14	16 20	22 24	26	28 32	34 38	
S		1117.0	CSZ			80 2310	
S		1191.5	CSZ			70 2310	
S		1201.8	CSZ			78 2310	
S		1221.9	CSZ			77 2310	
S		1241.8	CSZ			77 2310	
S		1271.0	CSZ			81 2310	
S		1291.0	CSZ			78 2310	
S		1310.7	CSZ			60 2310	
S		1311.0	FZ	E			Z Sym. 1311.0 – 1313.1 ft;
S		1313.1	FZ	S			S Sym. 1313.1 – 1346.0 ft; entire region ambiguous since few symmetry determinations obtained;
S		1321.6	CSZ			75 2310	
S		1341.0	CSZ			70 2310	
		EOH					

DDH FAGA069 (2 Feet 8)

Cyprus Anvil Mining Corp.

Structural Log

Page _____ of _____

Date: _____ Logged By: _____

Code	From	To	Feature	Sym	S_0 Dip Direct.	S_1 Dip Direct.	S_2 Dip Direct	Description
1	10 14	16 20	22 24	26	28 32	34 38	40 44	
F	1370	1430	G					gouge
F	1725	1730	G					"
F	1974	1976	G					"
F	1811	1828	G					"
F	1858	1870	G					"
F	2318	2330	G					"
F		2367	G					"
F	2477	2500	G					"
F	2530	2547	G					"
F		3972	G					"
F	4275	4365	I GB		74 006		78 006	broken core & S_2 // map gouge
F	4395	4401	S					sheared
F		4506	S					"
F	5587	5593	X					byia
F	5696	5710	G					gouge
F	5930	5990	S					sheared
F	9050	9060	G					gouge
F	9220	9230	S					sheared
F	9420	9430	S					"
F	11140	11240	M F ? I					4CO byia w/ CC frac. fillings
F		7995	G					
F	10718	10929	I XQ					
F	10970	11140	3 BQ					
F		11520	I G					
F	11940	11965	B I G					

DDH 75-A069 (2 / 8)

Cyprus Anvil Mining Corp.
Geochemical Log (Sampler's Copy)

Logged By: PN

Sampled By:

Code	From	To	Sample No.	Description			
1	10 14	16 20	22 27		LENGTH	REC.	UNIT
P	14520	14546	113513	K.A.	2.6	2.6	4D3
P	14546	14599	113514	K.A.	5.3	5.3	4D3
P	14599	14624	113515	K.A.	2.5	2.5	4D3
P	14624	14697	113516	K.A.	7.3	7.3	4D3/4A3
P	14697	14718	113517	K.A.	2.1	2.1	4A3
P	14734	14810	113518	K.A.	7.6	7.6	4A3
P	14810	14850	113519	K.A.	4.0	4.0	4A3
P	14850	14910	113610	K.A.	5.0	5.0	4A3
P	14910	14951	113611	K.A.	5.1	5.1	4A3
P	14951	14964	113612	K.A.	1.3	1.3	4A3/4A1
P	15113	15210	113613	K.A.	7.5	7.5	4A1
P	15210	15277	113614	K.A.	6.7	6.7	4A1/4D3
P	15277	15325	113615	K.A.	4.8	4.6	4D3
P	15325	15410	113712	K.A.	7.5	7.5	4D3/4A3
P	15410	15514	113616	K.A.	11.4	11.4	4A3
P	15514	15569	113617	K.A.	5.5	5.3	4A3/5D0/4A3
P	15569	15588	113618	K.A.	1.9		4A3/4L0
P	15614	15658	113716	K.A.	1.0	1.0	4A0
P	15658	15750	113713	K.A.	9.2	7.6	4A0/4A1
P	15750	15811	113714	K.A.	6.5	6.0	4A1
P	15811	15881	113715	K.A.	6.6	6.5	4A1
P	15881	15930	113717	K.A.	4.9	3.8	4A1
P	15930	15987	113718	K.A.	5.7	2.5	4A1
P	15987	16019	113719	K.A.	10.3	9.7	4A1
P	16019	16127	113810	K.A.	3.7	3.7	4A1
P	16127	16160	113619	K.A.	3.3	3.3	4A1
P	16160	16220	113710	K.A.	6.0	6.0	4A1
P	16220	16260	113711	K.A.	4.0	4.0	4A1
P	16260	16283	113811	K.A.	2.3	2.3	4A1
P	16283	16320	113812	K.A.	3.7	3.3	4A1
P	16320	16382	113813	K.A.	6.2	4.6	4A1
P	16382	16435	113814	K.A.	5.3	4.9	4A1
P	16435	16505	113815	K.A.	7.0	5.2	4A1
P	16505	16580	113816	K.A.	7.5	7.5	4A1
P	16580	16650	113817	K.A.	7.0	6.0	4A1
P	16650	16710	113818	K.A.	6.0	6.0	4A1

DDH 75-A069 (2 / 8)

Cyprus Anvil Mining Corp.
Geochemical Log (Sampler's Copy)

Logged By: _____

Sampled By: _____

Code	From	To	Sample No.	Description			
1	10 14	16 20	22 27		LENGTH	REC.	UNIT
P	16711 0	16716 1	1113819	K.A.	5.1	5.1	4A1
P	16716 1	16810 1	1113910	K.A.	4.0	4.0	4A1
P	16810 1	16865	1113911	K.A.	6.4	6.0	4A1
P	16865	16920	1113912	K.A.	5.5	5.1	4A1
P	16920	16996	1113913	K.A.	7.6	7.6	4A1
P	16996	17020	1113914	K.A.	2.4	1.5	4LD
P	17020	17058	1113915	K.A.	3.8	2.0	4LD
P	17058	17083	1113916	K.A.	2.5	2.5	4LD
P	17083	17122	1113917	K.A.	3.9	3.9	4LD
P	17122	17143	1113918	K.A.	2.1	2.1	4LD
P	17143	17180	1113919	K.A.	3.7	3.3	4LD
P	17180	17216	1114010	K.A.	3.6	3.6	4LD
P	17212 5	17216 3	1116011	K.A.	3.8	2.9	4LD
P	17218 7	17310 1	1116012	K.A.	1.4	1.3	4A4
P	17311 4	17314 4	1116013	K.A.	3.0	2.8	4L6
P	17510 5	17511 5	1116014	K.A.	1.0	0.9	4A0
P	17518 8	17611 9	1116015	K.A.	3.1	3.1	4A4
P	17611 9	17687	1116016	K.A.	6.8	6.8	4A4
P	17687	17720	1116017	K.A.	3.3	3.2	4A4
P	17720	17743	1116018	K.A.	2.3	2.3	4A4
P	17810 0	17853	1116019	K.A.	5.3	5.3	4A4
P	17853	17891	1116110	K.A.	3.8	3.8	4A1 / 4L6
P	17930	17988	1116111	K.A.	5.8	5.8	4L6 / 4L4
P	19919 5	110150	1116112	K.A.	5.5	5.5	4A4 / 4G4
P	110150	110150	1116113	K.A.	10.0	10.0	4G4 / 4E0
P	110150	110250	1116114	K.A.	10.0	10.0	4G4 / 4K6
P	110250	110310	1116115	K.A.	6.0	6.0	4K6
P	110310	110345	1116116	K.A.	3.5	3.5	4K6
P	110345	110367	1116117	K.A.	2.2	2.2	4K6 / 4A4
P	110367	110395	1116118	K.A.	2.8	2.8	4A4
P	110395	110443	1116119	K.A.	4.8	4.8	4A4
P	110443	110510	1116210	K.A.	6.7	6.7	4A4
P	110510	110568	1116211	K.A.	5.8	5.8	4A4
P	110568	110620	1116212	K.A.	5.2	5.2	4A4
P	110620	110695	1116213	K.A.	7.5	6.5	4A4
P	110695	110714	1116214	K.A.	1.9	1.9	4A4

DDH 75-A069 (2 / 8)

Cyprus Anvil Mining Corp.
Geochemical Log (Sampler's Copy)

Logged By: PW

Sampled By:

Code	From	To	Sample No.	Description			
1	10 14	16 20	22 27		LENGTH	REC.	UNIT
P	109187	111055	116215	KA	6.8	6.4	4L2
P	111140	111214	116216	KA	10.0	1.5	4CO
P	111510	111557	116217	KA	4.7	4.5	4L1
P	111557	111643	116218	KA	8.6	8.0	4L1/4LH
P	111643	111655	116219	KA	1.2	1.2	4LH

Logged 1980, Checked for sampling 1981

DDH 75-A069 Cyprus Anvil Mining Corp

Page ____ of ____

Logged by PN / Checked JSM

ASSAY LOG (SAMPLER'S COPY)

Date 8/81

Sampled by ____

CODE	FROM	TO	SAMPLE	INTR.	REC (m)	UNIT	DESCRIPTION	
1	10 14	16 20	22 26	28 30	32 34	36 40	42	
P	4520	4546	911022	26	26	4D4	No core - Met test KA (4E4?) Kerr Add 1353	
P	4546	4565	8359	19	19	4C0		1
P	4565	4597	8360	32	32	4A3		2
P	4597	4615	8361	18	18	4D4		3
P	4615	4674	8362	59	55	4C0		4
P	4674	4720	8363	46	40	4A3	(469.7-471.8 whole core sampled met test KA) → (4A43?)	5
P	4720	4734	----			5C4*	No sample 0%	1
P	4734	4810	8364	76	72	4A4 ±	3	6
P	4810	4867	8365	57	57	4A4 ±	3	
P	4867	4900	8366	33	33	4A4 ±	3	
P	4900	4962	8367	62	62	4A4 ±	3	
P	4962	5020	8368	58	58	4L0		7
P	5020	5080	8369	60	60	4A1		8
P	5080	5153	8370	73	73	4A1		
P	5153	5220	8371	67	67	4A1		
P	5220	5274	8372	54	54	4L1		8A
P	5274	5321	911023	47	—	4D4?	KA (note KA measured it slightly diff) Kerr Add - 1365	
P	5321	5339	8373	18	18	4L2		9
P	5339	5407	8374	68	68	4A1	±3 (4D0)	10
P	5407	5470	8375	63	63	4A1	±3 (4D0)	
P	5470	5525	8376	55	55	4A1	±3 (4D0)	
P	5525	5541	8377	16	14	5C4*		11
P	5541	5576	8378	35	35	4A1	±4	12
P	5576	5602	8379	26	26	4L0		13
P	5602	5649	----	47	—	5B6	No sample recorded 0%	
P	5649	5710	8380	61	60	4A1	±4	14
P	5710	5770	8381	60	60			
P	5770	5825	8382	55	55			
P	5825	5881	8383	56	56			
P	5881	5942	8384	61	61			
P	5942	6020	8385	78	60			
P	6020	6062	8386	42	42			
P	6062	6127	8387	65	60			
P	6127	6190	8388	63	60			
P	6190	6240	8389	50	50			
P	6240	6290	8390	50	50			

C.A.M.C. 1981 - E - 5

Note: TTC sample #'s do not correspond to unit #'s due to so many corrections

DDH 75-A069 (2 / 8) Cyprus Anvil Mining Corp Page ____ of ____

ASSAY LOG (SAMPLER'S COPY) Date ____ Logged by ____ Sampled by ____

CODE	FROM	TO	SAMPLE	INTR.	REC (m)	UNIT	DESCRIPTION
	10 14	16 20	22 26	28 30	32 34	36 40	42
P	61219	61358	83991	62	60		KERR ADD.
P	61358	61436	83992	78	72		
P	61436	61500	83993	64	64		
P	61500	61567	83994	67	67		
P	61567	61630	83995	63	63		
P	61630	61695	83996	65	65		
P	61695	61748	83997	53	53		
P	61748	61801	83998	53	53		↓
P	61801	61865	9110214	64	60	4A4	? KA sample# not test #1391
P	61865	61930	83999	65	65	4D45	(4A3)(4C*)
P	61930	61996	84000	66	66	4D45	(4A3)(4C*)
P	61996	70800	79511	89	76	4K01	(5D4)
P	70800	71147	79512	67	67		↓
P	71147	72115	79513	68	68		↓
D	72115	72125	----	10	—	4L01	No sample 09o
P	72125	72163	9110215	38	29	4AD4	? KA sample# not test #1601
P	72163	72187	----	24	15	5A119	No sample 09o.
P	72187	73101	79514	14	14	4A4	
P	73101	73114	----	13	—	5A19	No sample 09o
D	73114	73444	9110216	30	28	4A4	(4D4 selicitic) ??? KA # not test #1603
P	75188	76119	9110217	31	31	4DH	sericitic? KA# not test #1605
P	76191	76811	79955	70	70		
P	76811	77443	79713	62	62	4A1	±3 ±4 (4C0)
D	77443	78000	----			5B1614	No sample, record as 09o
P	78000	78544	79516	54	54	4A14	+3g z
P	78544	78886	79517	32	32	5B161	(minor sfds)
D	78886	79334	----			5B14	no sample record as 09o
P	79334	79886	79518	52	52	4A1	phyll
P	99902	100110	79519	18	18	4A1	
D	100110	100165	79610	55	55	4G4*	cc
P	100165	101000	79611	35	30	4E4	
P	101000	101120	79612	20	18	4G4*	
P	101120	101151	79613	31	30	4E4	
P	101151	101165	79614	14	14	4G4*	
P	101165	101195	79615	30	30	4E4*	cc (4G4)

C.A.M.C. 1981 - E - 5

DDH 75-A069 Cyprus Anvil Mining Corp Page ____ of ____

Logged by ____

ASSAY LOG (SAMPLER'S COPY) Date ____ Sampled by ____

CODE	FROM	TO	SAMPLE	INTR.	REC (m)	UNIT	DESCRIPTION
P	1012.95	1012.50	79166	55	55	4E4*	cc (4G4
P	1012.50	1013.16	911028	10	10	4E4	KA sample# not test: 1614
P	1013.10	1013.45	911066	60	60	4E4	" 1615
P	1013.52	1041.0	79167	68	62	4A11	±3±4 → Note 290
P	1041.0	1051.0	79168	100	100	4A11	±3±4 1034.5-1035.2 not taken by not test
P	1051.0	1060.2	79169	92	92	4A11	30
P	1060.2	1070.7	79170	105	105	4A11	but incl. in that 10th interval so not sampled
P	1156.4	1161.0	79171	46	46	4L4	31
P	1161.0	1165.5	79172	45	43	4L4	

C.A.M.C. 1981 - E - 5

DIAMOND DRILL RECORD

LOGGED BY D. Basco

PROPERTY VANGORDA, GRUM JOINT VENTURE

D.D.H. No. 75-A69 PAGE 1 of 13

CLAIM No.

	HIW	LINA GRID	TROPARI	@ 402'	133° 08' (Azim True)
LATITUDE	35942.63N (10,955.31M N)	6 + 00N	BEARING OF HOLE	802'	132° 56'
				1202'	172° 20'
DEPARTURE	24663.40E (7517.40M E)	79 + 98W	DIP OF HOLE	-	90°
			TROPARI	@ 402'	-82°
ELEVATION	4308.20' (1313.14M)	4266.20'	DIP TESTS	802'	-86°
				1202'	-85°

STARTED April 27, 1975

COMPLETED May 11, 1975

Proposed: 1350'

DEPTH Ultimate: 1346' (410.26M)

0 - 50' -- BW

SIZE OF HOLE 50 - 1346' -- BQ

DIRECTION AND DISTANCE FROM NE. CLAIM POST

FOOTAGE FROM	FOOTAGE TO	DESCRIPTION	Rec. Ft.	Sample No.	Footage From	Footage To	Sample Length	Assay Pb	Assay Zn	Assay Ag	Assay Au	Assay Cu	Assay x Feet Pb	Assay x Feet Zn	Assay x Feet Ag
	11.28 ft.														
0	37	OVERBURDEN	Nil		0	37									
	65.1														
37	213.5	QUARTZ - CHLORITE - SERICITE PHYLLITE Sc	3.3/23			60									
		Light to dark green, banded, striped with thin quartz layers. 45% quartz, 45% chlorite, 10% sericite, tuffaceous in parts.	1.8/6			66									
		F1 subvertical to F2.	0.8/6			73									
		22.4 48.7 64.0 Core Angle: 75° @ 37-110', 85° @ 110-210', 70° @ 210'.	6.6/8			81									
		11.2 13.1 55.2 55.7 Well developed fissility. Fault, gougy @ 37-43'; @ 181-183'. Shears at 52-73'; @ 80-81'; @ 187'.	2.9/7			88									
		15.3 22.2 24.5 34.7 56.1	1.3/6			94									
			3/6			100									
			68/68			168									
			9/10			178									
			4.5/15			183									
			4.5/5			188									
			18/18			206									
			7.5/7.5			213.5									

DIAMOND DRILL RECORD

LOGGED BY D. Basco

PROPERTY

LATITUDE BEARING OF HOLE STARTED

DEPARTURE DIP OF HOLE COMPLETED

ELEVATION DIP TESTS DEPTH Proposed: Ultimate:

D.D.H. No. 75-A69 PAGE 2 of 13

CLAIM No.

N ← DIRECTION AND DISTANCE FROM NE. CLAIM POST

FOOTAGE FROM	FOOTAGE TO	DESCRIPTION	Rec. Ft.	Sample No.	Footage From	Footage To	Sample Length	Assay Pb	Assay Zn	Assay Ag	Assay Au	Assay Cu	Assay x Feet Pb	Assay x Feet Zn	Assay x Feet Ag
65.1	110.3		12.5/												
213.5	362	GRAY QUARTZ - SERICITE PHYLLITE S	12.5			226									
		Banded, fissile in parts, striped with quartz-feldspar, minor chlorite. Quartz 50%-60%, sericite 30-40%, chlorite 0-10%.	11/17			243									
		Sheared. May be faulted @ 227-256', @ 268-270', @ 273, @ 298-304'. (67.2 73.0 81.7 82.3 83.2 90.8)	8/13		243	256									
		(90.6) Core Angles: 75° @ 215' (65.5), 85° @ 266' (81.1), 88° @ 288' (87.8), 90° @ 360' (109.7).	9/10			266									
		Relatively competent, except where faulted or sheared as noted above. Bleached quartz-sericite 230-267' (70.1 81.4) with no sulphides.	6/7			273									
			14/15			288									
			6.5/10			298									
			9/10			308									
			6/7			315									
			48/48			362									
	129.2														
362	424	QUARTZ - SERICITE PHYLLITE S													
		Laminated, striped with quartz-feldspar. Light green chlorite foliation interspersed with more predominant quartz and muscovite	6/9		362	371									
		quartz-carbonate tension cracks fillings. F2 foliation well developed. Subvertical F1 noted in parts.	13/15			386									
		Core Angles: 80° @ 390' (118.9); 82° @ 424' (129.2).	38/38			424									
		Broken core where recovery relatively poor. May be due to drilling.													
	133.5														
424	438	BLEACHED QUARTZ - SERICITE PHYLLITE Sb													
		White calcareous, hydrothermally altered quartz-sericite-chlorite phyllite. Weak, grounded by drilling.	11/14		424	438									

DIAMOND DRILL RECORD

LOGGED BY D. Basco

PROPERTY

LATITUDE BEARING OF HOLE STARTED

DEPARTURE DIP OF HOLE COMPLETED

ELEVATION DIP TESTS DEPTH Proposed: Ultimate:

D.D.H. No. 75-A69 PAGE 3 of 13

CLAIM No.

N — DIRECTION AND DISTANCE FROM NE. CLAIM POST

FOOTAGE FROM	FOOTAGE TO	DESCRIPTION	Rec. Ft.	Sample No.	Footage From	Footage To	Sample Length	Assay Pb	Assay Zn	Assay Ag	Assay Au	Assay Cu	Assay x Feet Pb	Assay x Feet Zn	Assay x Feet Ag
133.5 438	137.7 452	QUARTZ - SERICITE - GRAPHITE PHYLLITE Sq													
		Dark gray, alternating laminae of quartz, sericite and graphite Fissile.	8/14		438	452									
		Core Angles: 85° @ 438', 87° @ 452'. Sheared @ 436-437'. 133.5 137.7 132.1 - 132.5													
452	150.1 495.1	MASSIVE SULPHIDE BANDS IN QUARTZ- SERICITE PHYLLITE with MINOR GRAPHITE		M-Sq											
		Mainly pyrite, some pyrrhotite in parts, minor irregularly distributed sphalerite, galena and rare chalcopyrite. Both F1 and F2 are sulphide carriers.													
		Gore Angles: 86° with F1 subvertical to it.													
		Note: 471.8-473.4' -- not sampled, being barren, though bleached, crumbly, buff quartz-sericite phyllite.													
		491.6-495.1' -- is striped quartz-sericite carrying thin bands of sparse sulphides with very little graphite.													
		452 -454.6' -- 50% pyrite, 13% lead-zinc	2.6	1353	452	454.6	2.6	6.31	8.39	2.68			16.406	21.814	6.968
		-459.9' -- 40% pyrite, no lead-zinc													
		-462.4' -- 50% pyrite, 4% lead-zinc	5.3	1354		459.9	5.3	.40	.39	.29			2.12	2.067	1.537
		-469.7' -- 40% pyrite, 0.5% lead-zinc													
		-471.8' -- 40% pyrite, 10% lead-zinc	2.5	1355		462.4	2.5	6.48	5.04	2.79			16.20	12.60	6.975
		473.4 -481.0' -- 40% pyrite, 12% lead-zinc	7.3	1356		469.7	7.3	.27	.33	.18					
		-485.0' -- 45% pyrite, 10% lead-zinc	2.1	1357	471.8	471.8	2.1	6.76	9.39	2.68			14.196	19.719	5.628
		-490.0' -- 30% pyrite, 2-3% lead-zinc	7.6	1358	473.4	481.0	7.6	4.73	6.72	1.94			35.948	51.072	14.744
		-495.1' -- 20% pyrite, 4% lead-zinc	4.0	1359		485.0	4.0	3.90	7.40	1.65			15.60	29.60	6.60
			5.0	1360		490.0	5.0	1.08	1.84	.59					
			5.1	1361		495.1	5.1	2.45	4.08	1.03			12.495	20.808	5.253
				Wt.Av.	452.0	462.4	10.4	3.34	3.51	1.49	(51.0 oz/ton)		34.726	36.481	15.480
				Wr. Av.	469.7	485.0	15.3	4.3	6.56	1.76	(60.4)		65.744	100.391	26.972

DIAMOND DRILL RECORD

LOGGED BY D. Basco

PROPERTY

LATITUDE BEARING OF HOLE STARTED

DEPARTURE DIP OF HOLE COMPLETED

ELEVATION DIP TESTS DEPTH Proposed: Ultimate:

D.D.H. No. 75-A69 PAGE 4 of 13

CLAIM No.

N

DIRECTION AND DISTANCE FROM NE. CLAIM POST

FOOTAGE FROM	FOOTAGE TO	DESCRIPTION	Rec. Ft.	Sample No.	Footage From	Footage To	Sample Length	Assay Pb	Assay Zn	Assay Ag	Assay Au	Assay Cu	Assay x Feet Pb	Assay x Feet Zn	Assay x Feet Ag
150.1 495.1	162.7 534.0	BLEACHED QUARTZ- SERICITE PHYLLITE WITH SOME RESIDUAL GRAPHITE		S6-9											
		Light gray, white in sections, interlaminated quartz and sericite Some residual graphite in parts. Sparsely disseminated sulphides													
		in gray quartz stringers following F1 and F2 foliations.													
		Core Angles: av. 85° @ 496-534'. 151.2 - 162.1													
		495.1-496.4' -- 2% pyrite, 1.5% lead-zinc	1.3	1362	495.1	496.4	1.3	1.40	3.48	.68			1.82	4.524	0.884
		513.5-521.0' -- 10% pyrite, 4% lead-zinc	7.5	1363	513.5	521.0	7.5	.79	1.84	.32					
		521.0-527.7' -- 10% pyrite, 4-5% lead-zinc	6.7	1364	(523.1 ~ 527.7)	527.7	6.7 (7.6)	2.03	2.88	.79			9.338	13.248	3.634
		527.7-532.5' -- 10% pyrite, 4% lead-zinc	4.6	1365		532.5	4.8	2.43	4.62	1.03			11.664	22.176	4.944
				Wt. Av.	490.0	496.4	6.4	2.24	3.96	0.96	(324)		14.345	25.332	6.137
				Wt. Av.	523.1	532.5	9.4	2.23	3.77	0.91	(313)		21.002	35.424	8.578
534.0	164.2 538.7	QUARTZ - SERICITE - GRAPHITE PHYLLITE S9													
		Striped. Pyrite in foliation. One foot band of massive pyrite	7.5	1372	532.5	540.0	7.5	1.02	1.68	.53					
		with discrete crystals of blueish sphalerite and galena.@													
		529.5-530.5' section. Core angle av. 85° with subvertical F1.													
		532.5-540.0' -- 10% pyrite, 4-5% lead-zinc.													
538.7	164.7 556.9	QUARTZ - SERICITE - GRAPHITE PHYLLITE S9													
		Striped, interlaminated quartz, sericite and lesser graphite.													
		Visible discrete crystals of pyrite, sphalerite and galena with													
		chalcopyrite in foliation. Bleached to white quartz-sericite @													
		552-554' and crumbly.													
		540-551.4' -- 5% pyrite, 1.5%-2% lead-zinc	11.4	1366	540	551.4	11.4	.20	.48	.06		c			
		-556.9' -- 15% pyrite, 7-8% lead-zinc			(548.8 ~ 551.4)		(2.6)						0.52	1.248	0.156
			5.3	1367		556.9	5.5	2.05	4.56	.79			11.275	25.080	4.345

DIAMOND DRILL RECORD

LOGGED BY D. Basco

PROPERTY

LATITUDE BEARING OF HOLE STARTED

DEPARTURE DIP OF HOLE COMPLETED

ELEVATION DIP TESTS DEPTH Proposed: Ultimate:

D.D.H. No. 75-A69 PAGE 5 of 13

CLAIM No.

N ← DIRECTION AND DISTANCE FROM NE. CLAIM POST

FOOTAGE FROM	FOOTAGE TO	DESCRIPTION	Rec. Ft.	Sample No.	Footage From	Footage To	Sample Length	Assay Pb	Assay Zn	Assay Ag	Assay Au	Assay Cu	Assay x Feet Pb	Assay x Feet Zn	Assay x Feet Ag
167.1	200.5														
556.9	657.8	QUARTZ - SERICITE - CHLORITE PHYLLITE P - Sc													
		45% quartz, 40% sericite, 15% chlorite, gray-green, foliated,	6.5/8	1368	556.9	558.8	1.9	.59	1.44	.21			1.121	2.736	0.399
		mineralized with thin bands of gray quartz carrying disseminated				564.8									
		pyrite, sphalerite, galena and rare chalcopyrite along foliations	1.0	1376		565.8	1.0	.72	1.54	.18	0				
		Firm where unsheared. Bleached breccia @ 556.9-560'. Faulted,	7.6	1373		575.0	9.2	2.15	3.48	.88			19.78	32.016	8.096
		gougey @ 569-571'. Sheared @ 593-599'.	6.0	1374		581.5	6.5	1.44	1.64	.62			9.36	10.66	4.03
			6.5	1375		588.1	6.6	2.23	4.62	1.03			14.72	30.49	6.80
		Core Angle: 80° on the average. 78° @ 556', 85° @ 657'.	3.8	1377		593.0	4.9	1.63	3.84	.79			7.99	18.82	3.87
			2.5	1378		598.7	5.7	2.28	3.66	1.00			13.00	20.86	5.7
		556.9-558.8' -- 40% pyrite, 1-1.5% lead-zinc	9.7	1379		609.0	10.3	1.47	2.61	.59					
		564.8-565.8' -- 1% pyrite, 1.5% lead-zinc	3.7	1380		612.7	3.7	.40	.92	.09					
		-575.0' -- 10% pyrite, 6% lead-zinc	3.3	1369		616.0	3.3	1.68	2.58	.71			5.54	8.51	2.34
		-588.1' -- 3% pyrite, 3-5% lead-zinc	6.0	1370		622.0	6.0	2.10	4.26	.82			12.6	25.56	4.92
		-598.7' -- 1.5% pyrite, 1.3% lead-zinc	4.0	1371		626.0	4.0	3.00	4.74	1.06			12.0	18.96	4.24
		-609.0' -- 3% pyrite, 4.5% lead-zinc	2.3	1381		628.3	2.3	1.18	2.40	.41			2.71	5.52	.94
		-612.7' -- 1% pyrite, 1% lead-zinc	3.3	1382		632.0	3.7	.58	1.38	.21			2.15	5.11	.78
		-626.0' -- 3-4% pyrite, 5-8% lead-zinc	4.6	1383		638.2	6.2	1.28	1.62	.44			7.94	10.04	2.73
		-628.3' -- 0.5% pyrite, 3.5% lead-zinc	4.9	1384		643.5	5.3	1.45	2.76	.59			7.96	14.63	3.13
		-632.0' -- 0.2% pyrite, 2% lead-zinc	5.2	1385		650.5	7.0	2.05	4.08	.88			14.35	28.56	6.16
		-658.0' -- 0.5-1% pyrite, 4-6% lead-zinc	7.5	1386		658.0	7.5	1.58	2.94	.74			11.85	22.05	5.55
				Wt. Av.	565.8	581.5	15.7	1.86	2.72	0.77	(26.5 oz/ton)		29.14	42.676	12.126
				" "	581.5	598.7	17.2	2.08	4.08	.95			35.71	70.17	16.37
				" "	612.7	626.0	13.3	2.26	3.99	.87	Weighted Average		30.14	53.03	11.50
				" "	626.0	638.2	12.2	2.7	lead-zinc						
				Wt. Av.	548.8	558.8	10.0	1.29	2.91	0.49	(~~18~~)		12.916	29.064	4.90
	213.2														
657.8	699.6	QUARTZ - SERICITE - CHLORITE - GRAPHITE PHYLLITE Sc G													
		Dark gray, partially bleached, foliated, made up approximately	6.0	1387	658.0	665.0	7.0	1.63	4.08	.71			11.41	28.56	4.97
		60% quartz, 25% sericite, 10% chlorite, and 5% graphite.													
		Mineralized with pyrite, sphalerite and galena disseminated in	6.0	1388		671.0	6.0	1.63	3.60	.16			9.78	21.6	.96
		gray quartz bands and stringers following foliations. Sheared	5.1	1389		676.1	5.1	.69	1.50	.59					

DIAMOND DRILL RECORD

LOGGED BY D. Basco

PROPERTY

D.D.H. No. 75-A69 PAGE 6 of 13

LATITUDE BEARING OF HOLE STARTED CLAIM No.

DEPARTURE DIP OF HOLE COMPLETED

ELEVATION DIP TESTS DEPTH Proposed: Ultimate:

N ← DIRECTION AND DISTANCE FROM NE. CLAIM POST

FOOTAGE FROM	FOOTAGE TO	DESCRIPTION	Rec. Ft.	Sample No.	Footage From	Footage To	Sample Length	Assay Pb	Assay Zn	Assay Ag	Assay Au	Assay Cu	Assay x Feet Pb	Assay x Feet Zn	Assay x Feet Ag
			4.0	1390		680.1	4.0	1.30	3.12	.85			5.2	12.48	3.4
		@ 668=671' = 35° to core. Massive sulphide with quartz bands	6.0	1391		686.5	6.4	2.30	5.58	1.29			14.72	35.71	8.26
		@ 692-699.6' may carry ore grade. Firm where unsheared. Core	5.1	1392		692.0	5.5	.63	.74	.38					
		Angle averages 75° through section.	7.6	1393		699.6	7.6	5.10	8.28	2.35					
		658-671.0' -- 4-6% pyrite, 7-7.5% lead-zinc													
		-767.1' -- 20% pyrite, 2.5% lead-zinc			638.2	671.0	32.8	1.68	3.52	.63	} Weighted Average		55.35	115.46	20.77
		680.1' -- 5% pyrite, 5.5% lead-zinc													
		686.5' -- 12% pyrite, 9.0% lead-zinc			676.1	686.5	10.4	1.92	4.63	1.12			19.92	48.19	11.66
		692.0' -- 15% pyrite, 0.1% lead-zinc													
		699.6' -- 15% pyrite, 13% lead-zinc													
613.2	221.9														
699.6	728.3	BUFF QUARTZ - SERICITE PHYLLITE (ore Zone)				702.0									
		Bleached, originally quartz -- sericite-chlorite-graphite.	1.5	1394	699.6	720.0	2.4	6.55	11.05	2.79			15.72	26.52	6.70
		Mineralized as noted below. Sections of high grade and low													
		grade alternate with some in waste. Quartz, ankerite and sericite	2.0	1395		705.8	3.8	.47	.30	.29					
		predominate. Core Angle averages 75-65° through the section.	2.5	1396		708.3	2.5	1.35	1.90	.76	10.2 → 1.23				
		Firm or competent rocks.	3.9	1397		712.2	3.9	.17	.21	.12					
			2.1	1398		714.3	2.1	1.78	6.42	.79					
			3.3	1399	(716.3 - 718.0)	718.0	(3.7)	.24	.41	.12			0.41	0.7	0.2
			3.6	1400		721.6	3.6	5.18	9.48	1.74			18.65	34.13	6.26
			2.9	1601	722.5	726.3	3.8	8.58	24.07	3.24			32.60	91.47	12.31
		699.6-702.0' -- 6% pyrite, 6% lead-zinc		Wt. Av.	692.0	702.0	10.0	5.45	8.94	2.46	}		54.48	89.45	24.56
		-705.8' -- 3% pyrite, 0.3% lead-zinc													
		-712.2' -- 1.0% pyrite, 0.3% lead-zinc		" "	718.0	726.3	8.3	6.17	15.13	2.24	} Weighted Average		51.25	125.60	18.57
		712.2-714.3' -- 10% pyrite, 5-6% lead-zinc													
		-718.0' -- 4% pyrite, 0.1% lead-zinc		Wt. Av.	716.3	726.3	10.0	5.17	12.6	1.88	(64.4)		51.66	126.30	18.77
		-721.6' -- 15% pyrite, 10% lead-zinc													
		722.5-726.3' -- 20% pyrite, 30% lead-zinc													
		Note: 721.6-722.5' -- not sampled, barren.													

DIAMOND DRILL RECORD

LOGGED BY D. Basco

PROPERTY

LATITUDE BEARING OF HOLE STARTED

DEPARTURE DIP OF HOLE COMPLETED

ELEVATION DIP TESTS DEPTH Proposed: Ultimate:

D.D.H. No. 75-A69 PAGE 7 of 13

CLAIM No.

N

DIRECTION AND DISTANCE FROM NE. CLAIM POST

FOOTAGE FROM	FOOTAGE TO	DESCRIPTION	Rec. Ft.	Sample No.	Footage From	Footage To	Sample Length	Assay Pb	Assay Zn	Assay Ag	Assay Au	Assay Cu	Assay x Feet Pb	Assay x Feet Zn	Assay x Feet Ag
228.7	230.1														
728.3	755.0	QUARTZ - SERICITE - CHLORITE - GRAPHITE PHYLLITE	1.3	1602	728.7	730.1	1.4	1.13	1.82	.53					
		Light, through medium to dark gray. Bleached to white quartz sericite in parts. Fissile, broken or sheared @ 751.5-754.0'.	2.8	1603	731.4	734.4	3.0	5.74	14.43	3.09			17.22	43.29	9.27
			0.9	1604	750.5	751.5	1.0	3.98	8.29	1.50			3.98	8.29	1.50
		Bands of massive sulphides interspersed with bleached quartz-sericite @ 731.4-734.4' and 750.5-751.5'.													
				Wt. Av.	731.4	751.5	10.1	2.1	5.11	1.07	(36.6)		21.20	51.58	10.77
		Core Angle: 83° @ 729-755'. Note: 1½" massive band of mixed sulphides @ 745' in F2 foliation of talcose quartz-sericite.													
		728.7-730.1' -- 5% pyrite, 4% lead-zinc 731.4-734.4' -- 20% pyrite, 15% lead-zinc													
		750.5-751.5' -- 10% pyrite, 6% lead-zinc													
	231.3														
755.0	758.8	BLEACHED QUARTZ - SERICITE PHYLLITE													
		White talcose, fissile, F2 foliation 70° to core axis.	3.8		755.0	758.8									
	236.0														
758.8	774.3	MASSIVE BANDS OF MIXED SULPHIDES													
		Massive bands of mixed sulphides in bleached quartz-sericite phyllite. F2 in massive sulphides, 53° to core axis.	3.1	1605	758.8	761.9	3.1	9.25	19.6	4.24			28.675	60.76	13.144
		Phyllite talcose, foliated and fissile. Occasional graphite coating noted.	6.8	1606		768.7	6.8	3.08	3.84	1.44			20.944	26.112	9.792
		758.8-761.9' -- 30% pyrite, 16% lead-zinc -768.7' -- 13% pyrite, 7% lead-zinc	3.2	1607		772.0	3.3	.40	.70	.26			1.32	2.31	0.858
		-770.2' -- 4% pyrite, 1% lead-zinc 772.0-774.3' -- 15% pyrite, 8-9% lead-zinc	2.3	1608		774.3	2.3	4.20	6.60	1.88			9.66	15.18	4.324
				Wt. Av.	758.8	774.3	15.5	3.91	6.73	1.81	(62.2)		60.599	104.362	28.118
				Wt. Av.	758.8	768.7	9.9	5.01	8.77	2.32	(79.4)		49.619	86.892	22.936

DIAMOND DRILL RECORD

LOGGED BY D. Basco

PROPERTY

LATITUDE BEARING OF HOLE STARTED

DEPARTURE DIP OF HOLE COMPLETED

ELEVATION DIP TESTS DEPTH Proposed: Ultimate:

D.D.H. No. 75-A69 PAGE 8 of 13

CLAIM No.

N

DIRECTION AND DISTANCE FROM NE. CLAIM POST

FOOTAGE FROM	FOOTAGE TO	DESCRIPTION	Rec. Ft.	Sample No.	Footage From	Footage To	Sample Length	Assay Pb	Assay Zn	Assay Ag	Assay Au	Assay Cu	Assay x Feet Pb	Assay x Feet Zn	Assay x Feet Ag
236.0	244.7														
774.3	803.0	QUARTZ - SERICITE PHYLLITE													
		Light to medium gray, bleached partially, minor chlorite in parts. Firm where unsheared, sparse mixed sulphides disseminations in													
		thin gray quartzy bands along foliations. Minor concentrations in places. Sheared @ 774.5-780', 799-800'.	5.7		774.3	780.0									
		Core Angle: 76° average.	5.3	1609	780.0	785.3	5.3	3.38	4.26	1.47					
		780.0-785.3' -- 7% pyrite, 8% lead-zinc	3.8	1610		789.1	3.8	.27	1.14	.06					
		~~-789.1' -- 3% pyrite, 2% lead-zinc~~	3.9	~		793.0									
		793.0-798.8' -- 3% pyrite, 2% lead-zinc	5.8	1611	793.0	798.8	5.8	1.20	1.74	.44					
803.0	254.2 834.0	QUARTZ - SERICITE - CHLORITE PHYLLITE													
		Gray-green, foliated. F2 = 72°.with subvertical F1. Some quartz	31/31		803.0	834.0									
		bands, firm, good recovery for the most part. Scattered pyrrhotite, rare pyrite.													
834.0	253.5 848.0	LIGHT QUARTZ - SERICITE PHYLLITE													
		Light gray. 2-36" quartz layers due to silification of the phyllite. F2 varies from 75 to 80° . Rare, scattered sulphides.	14/14		834.0	848.0									
		Firm.													
848.0	279.8 918.0	QUARTZ - CHLORITE - SERICITE PHYLLITE													
		Blueish to gray-green. Foliated. Fissile, altered to white quartz-sericite in which silicification occurs at intervals.	22/22		848.0	870.0									

DIAMOND DRILL RECORD

LOGGED BY D. Basco

PROPERTY

LATITUDE | BEARING OF HOLE | STARTED

DEPARTURE | DIP OF HOLE | COMPLETED

ELEVATION | DIP TESTS | DEPTH Proposed: Ultimate:

D.D.H. No. 75-A69 PAGE 9 of 13

CLAIM No.

DIRECTION AND DISTANCE FROM NE. CLAIM POST

FOOTAGE FROM	FOOTAGE TO	DESCRIPTION	Rec. Ft.	Sample No.	Footage From	Footage To	Sample Length	Assay Pb	Assay Zn	Assay Ag	Assay Au	Assay Cu	Assay x Feet Pb	Assay x Feet Zn	Assay x Feet Ag
			23/23			893.5									
		Mud seams @ 869', 887-888', 913'. Faults or shears @ 905-906',													
		and @ 916'. Rare sulphides noted here and there along foliations	11/11.5			905.0									
		Core Angle: 76 - 80°.	12/13			918.0									
277.3	303.3														
918.0	995.0	QUARTZ - SERICITE - CHLORITE PHYLLITE													
		Gray-green, interlaminated quartz-sericite and minor chlorite.	72/72		918	990									
		Foliated. F2 foliation 75-85° to core axis, with same F1 in													
		parts seen subvertical. Sheared @ 922-923', 942-943'. Mud	5/5			995									
		seam @ 944.5'. Firm or competent where unsheared.													
	305.1														
995.0	1001.0	QUARTZ - SERICITE PHYLLITE													
		Pale, foliated, firm, few F1 noted subvertical to F2. 81° to	6/6		995.0	1001.0									
		core axis. Last 1.5' is with mixed sulphides bands in quartz-													
		sericite.	5.5	1612	999.5	1005.0	5.5	5.03	8.55	2.47			27.67	47.03	13.59
		999.5-1001.0' -- 45% pyrite, 10% lead-zinc.													
	315.6														
1001.0	1035.3	MASSIVE MIXED SULPHIDES													
		Pyrite predominates with 65%, 8-15% lead-zinc, the rest being													
		quartz and sericite. A few streaks of late chalcopyrite occupy-													
		ing tension fractures as well as quartz and feldspar. F2 in													
		massive sulphides vary from 50° to 65° , a few subvertical F1													
		observed.													
		1001.0-1005.0' -- 65% pyrite, 20% lead-zinc.													

DIAMOND DRILL RECORD

LOGGED BY D. Basco

PROPERTY

LATITUDE | BEARING OF HOLE | STARTED

DEPARTURE | DIP OF HOLE | COMPLETED

ELEVATION | DIP TESTS | DEPTH Proposed: Ultimate:

D.D.H. No. 75-A69 PAGE 10 of 13

CLAIM No.

N — DIRECTION AND DISTANCE FROM NE. CLAIM POST

FOOTAGE FROM	FOOTAGE TO	DESCRIPTION	Rec. Ft.	Sample No.	Footage From	Footage To	Sample Length	Assay Pb	Assay Zn	Assay Ag	Assay Au	Assay Cu	Assay x Feet Pb	Assay x Feet Zn	Assay x Feet Ag
					(1005.0	1009.5)	(4.5')						21.60	24.57	9.54
		1005.0-1015.0' -- 60% pyrite, 15% lead-zinc	10	1613	1005	1015	10	4.80	5.46	2.12			48.0	54.6	21.2
		-1025.0' -- 60% pyrite, 10-15% lead-zinc													
		-1031.0' -- 60% pyrite, 18% lead-zinc	10	1614		1025	10	4.43	4.62	1.91			44.3	46.2	19.1
		-1034.5' -- 45% pyrite, 13% lead-zinc													
			6	1615		1031	6	5.95	9.13	2.44			35.7	54.78	14.64
			3.5	1616		1034.5	3.5	5.48	9.51	2.41			19.18	33.29	8.47
315.6	326.3														
1035.3	1070.5	QUARTZ - SERICITE - CHLORITE - GRAPHITE PHYLLITE	2.2	1617		1036.7	2.2	3.08	4.62	1.21			6.776	10.164	2.662
		Greenish-gray, striped, alternating laminae of quartz, sericite,	2.8	1618		1039.5	2.8	.37	.42	.24			1.036	1.176	0.672
		chlorite and minor thin graphite. Foliated. F2 foliation 80°,													
		carrying pyrite, sphalerite, galena and chalcopyrite sparsely	4.8	1619		1044.3	4.8	5.48	6.60	2.09			26.304	31.68	10.032
		distributed along foliations with occasional cross-cutting													
		veinlets of late sulphide mineralization.	6.7	1620		1051.0	6.7	1.28	1.44	.76			8.58	9.65	5.09
			5.8	1621		1056.8	5.8	.83	.60	.59			4.81	3.48	3.42
			5.2	1622		1062.0	5.2	1.42	1.16	.65			7.38	6.03	3.38
		1036.7-1039.5' -- 20% pyrite, 0.4% lead-zinc	6.5	1623		1069.5	7.5	.18	.08	.35			1.35	0.6	2.63
		-1044.3' -- 20% pyrite, 11% lead-zinc													
		-1051.0' -- 12% pyrite, 3.5% lead-zinc	1.9	1624		1071.4	1.9	1.15	1.58	.47			2.19	3.00	0.89
		-1056.8' -- 16% pyrite, 1.5% lead-zinc													
		-1062.0' -- 12% pyrite, 5.5% lead-zinc													
		-1069.5' -- 3% pyrite, 1.0% lead-zinc		Wt.Av.	999.5	1009.5	10.0	4.93	7.16	2.31	(79.3)		49.27	71.60	23.13
		-1071.4' -- 7% pyrite, 4.5% lead-zinc		Wt.Av	1025.0	1034.5	9.5	5.78	9.27	2.43	(83.3)		54.88	88.07	23.08
				" "	999.5	1034.5	35.0	5.00	6.74	2.20	(75.4)		174.85	235.90	77.00
				" "	1034.5	1044.3	9.8	3.48	4.39	1.36	(46.8)		34.116	43.020	13.366
				Wt.Av.	1044.3	1062.0	17.7	2.3	lead-zinc				39.93	Pb Zn	

17.09 — 1505

DIAMOND DRILL RECORD

LOGGED BY D. Basco

PROPERTY

LATITUDE BEARING OF HOLE STARTED

DEPARTURE DIP OF HOLE COMPLETED

ELEVATION DIP TESTS DEPTH Proposed: Ultimate:

D.D.H. No. 75-A69 PAGE 11 of 13

CLAIM No.

N — DIRECTION AND DISTANCE FROM NE. CLAIM POST

FOOTAGE FROM	FOOTAGE TO	DESCRIPTION	Rec. Ft.	Sample No.	Footage From	Footage To	Sample Length	Assay Pb	Assay Zn	Assay Ag	Assay Au	Assay Cu	Assay x Feet Pb	Assay x Feet Zn	Assay x Feet Ag
326.3 1070.5	333.1 1093.0	QUARTZ - SERICITE - CHLORITE PHYLLITE													
		Partially altered or bleached to light gray with most of the original graphite content flushed out. Foliated but firm. F2 = 72°. Quartz vein 1' thick @ 1071.4'. Sulphides rare although at the upper 1½' of the section low grade sulphide mineralization occurs. 1' of quartz replacement vein at 1071' carry base metal sulphides along tension cracks.	20/22.5		1070.5	1093.0									
1093.0	356.3 1169.0	QUARTZ - SERICITE PHYLLITE													
		Light gray to white, silicified, bleached. F2 = 75°. A few F1 subvertical to F2 noted. Poor recovery at certain sections. Broken or sheared @ 1105.5-1124', 1126.5-1128.0', 1153-1154', 1156-1160', 1162-1167'. Mineralized with good grade in parts.	5.7/5.7		1093.0	1098.7									
		1098.7-1105.5' -- disseminated sulphides in silicified quartz-sericite, 2-4% lead-zinc	6.4	1625		1105.5	6.8	.82	1.56	.41					
		1114.0-1124.0' -- sulphides in fractures of hornfelsic quartz-sericite-graphite. Recovery very poor. 6-8% lead-zinc.	3.3/8.5			1114.0									
			1.5	1626		1124.0	10.0	.62	1.11	.35					
		1151.0-1155.7' -- Sparse sulphides in altered quartz-sericite along foliations. 0-2% lead-zinc	23.2/27.0			1151.0									
		-1162.0' -- narrow bands of massive sulphides in quartz-sericite last rock, 10% lead-zinc	4.5	1627		1155.7	4.7	.23	.25	.06					
		-1165.5' -- narrow bands of sulphides in predominant altered quartz-sericite, 5% lead-zinc.	8	1628		1164.3	8.6	2.82	2.64	.91					
			1.2	1629		1165.5	1.2	.95	.75	.26					
			3.5			1169.0									
1169.0	363.3 1192.0	QUARTZ - SERICITE - CHLORITE PHYLLITE													
		Pale green, alternating laminae of quartz, sericite and minor chlorite. A few replacement quartz bands. F2 = 75°-85°.	23/23		1169	1192									

DIAMOND DRILL RECORD

LOGGED BY D. Basco

PROPERTY

LATITUDE BEARING OF HOLE STARTED

DEPARTURE DIP OF HOLE COMPLETED

ELEVATION DIP TESTS DEPTH Proposed: Ultimate:

D.D.H. No. 75-A69 PAGE 12 of 13

CLAIM No.

N

DIRECTION AND DISTANCE FROM NE. CLAIM POST

FOOTAGE FROM	FOOTAGE TO	DESCRIPTION	Rec. Ft.	Sample No.	Footage From	Footage To	Sample Length	Assay Pb	Assay Zn	Assay Ag	Assay Au	Assay Cu	Assay x Feet Pb	Assay x Feet Zn	Assay x Feet Ag
		Rare patches of pyrrhotite, firm, becomes graphitic in the last 11 feet.													
363.3 1192	364.8 1197	GRAPHITE - QUARTZ - SERICITE													
		Dark gray to black, foliated and fissile. An inch of quartz vein in the middle. F2 = 85°. Graphite = 25% of section.	4/5		1192	1197									
1197	370.3 1215	QUARTZ - SERICITE - PHYLLITE WITH MINOR CHLORITE													
		Alternating laminae of quartz and sericite with little chlorite. Firm. Sparse sulphide, mostly pyrrhotite. F2 = 80°.	18/18		1197	1215									
1215	381.3 1251	QUARTZ - SERICITE PHYLLITE													
		Bleached white, much quartz from silicification. Patches and streaks of pyrrhotite. Little pyrite, rare sphalerite and galena. Firm. F2 = 85°. Magnetic for the most part.	36/36		1215	1251									
		At 1241-1242' -- significant galena mineralization in F2 and F1 foliations noted.			1241	1242		Estimate 5.0% lead-zinc							
1251	387.2 1277	QUARTZ - CHLORITE - SERICITE PHYLLITE													
		Gray-green, foliated but firm where unsheared. Partially silicified. Abundant quartz-carbonate veins. F2 = 75-85° with well developed F1 in places. Quartz-chlorite-sericite interlaminated. Mud seams @ 1261.4-1262.0'. Abundant biotite.	25/26		1251	1277									

DIAMOND DRILL RECORD

LOGGED BY D. Basco

PROPERTY

LATITUDE | BEARING OF HOLE | STARTED

DEPARTURE | DIP OF HOLE | COMPLETED

ELEVATION | DIP TESTS | DEPTH Proposed: Ultimate:

D.D.H. No. 75-A69 PAGE 13 of B

CLAIM No.

N

DIRECTION AND DISTANCE FROM NE. CLAIM POST

FOOTAGE FROM	FOOTAGE TO	DESCRIPTION	Rec. Ft.	Sample No.	Footage From	Footage To	Sample Length	Assay Pb	Assay Zn	Assay Ag	Assay Au	Assay Cu	Assay x Feet Pb	Assay x Feet Zn	Assay x Feet Ag
381.2	311.3														
1277	1310	BLEACHED QUARTZ - SERICITE PHYLLITE													
		White boudined quartz fragments, more sericite interlaminated with lesser quartz. Well developed F2 with local subvertical F1	43/43		1277	1310									
		Abundant pyrrhotite and lesser pyrite. Minor chalcopyrite and rare sphalerite and galena along foliations. Firm where unsheared.													
		Some fusion to hornfelsic material with pyrrhotite and magnetite 1277.5-1279.0, as well as quartz veins. Chloritic in parts.													
		Core angle ranges from 75-85°.													
	416.26														
1310	1346	QUARTZ - SERICITE - CHLORITE PHYLLITE (Biotite)													
		Green-gray, foliated. Firm. Quartz striped with green chlorite and partially bleached. Pyrrhotite bands at intervals. F2 =	36/36		1310	1346									
		60° @ 1313', 70° @ 1327' and 70° @ 1346'.													
	1346	END OF HOLE													
		REMARKS: 1. Collar + 392-458' -- losing water.													
		2. Collar + 489' -- lost circulation.													
		3. Cemented hole from 1346' up -- used 12 bags of cement.													

Interval From	Interval To	DESCRIPTION	Recovery	Sample NO	Interval From	Interval To	Sample Length	Assay Pb	Assay Zn	Assay Ag	Assay Au	Assay Cu	Assay x Pb	Assay x Zn	Assay x Ag
		foliation. Both contact = 75°.													
		142.1-142.5: Massive sulfide interval. Contact gradual-													
		abrbitrary. Banding = 80°.													
		144.8: Decrease in mineralization. Abrupt termination													
		marked by bull quartz.													
144.8	155.4	GRAPHITIC PHYLLITE (G). Easily breaks into poker chips.	9.6		144.8	155.4	10.6								
		Foliation = fissility = 85-90°; F = 0-5°. Occasional													
		sulfides clots.													
		155.4: Decrease in graphitic constituent. Rx becoming													
		sericite phyllite with trace of graphite (S+G).													
155.4	162.0	SERICITE PHYLLITE W/TRACE GRAPHITE (S+G). Easily breaks into	6.3		155.4	162	6.6								
		poker chips. Foliation = 85-90°; F = 0-5°. Interlaminated													
		bleached sericite-short run = 5cm.													
		161.8: Shear.													
		162.0: Abrupt change to Bleached Phyllite (Sb). Contact													
		broken ground (part of shear).													
162.0	164.6	BLEACHED PHYLLITE (Sb). Blocky core ranging from flakes to	2.5		162.0	164.6	2.6								
		3cm long. Foliation = 85-90°. F = 0-5°. Short intervals													
		(=15cm) of mineralized ground.													

Interval From	Interval To	DESCRIPTION	Recovery	Sample Nº	Interval From	Interval To	Sample Length	Assay Pb	Assay Zn	Assay Ag	Assay Au	Assay Cu	Assay x Pb	Assay x Zn	Assay x Ag
		164.6: Abrupt change to sericite phyllite (S). Contact													
		broken ground.													
164.6	167.6	SERICITE PHYLLITE (S). Broken, blocky core. Foliation = 85-	2.6		164.6	167.6	3.0								
		90°. F = 0-5°.													
		165.8; 167.0: Shear.													
		167.6: Shear contact with graphitic phyllite (G).													
167.6	169.5	GRAPHITIC PHYLLITE (G). Broken core-fragments of "poker	1.5		167.6	169.5	1.9								
		chips". Foliation = 90°.													
		169.5: Increase in mineralization. Rx becoming mineralized													
		graphitic phyllite (PG).													
169.5	172.2	MINERALIZED GRAPHITIC PHYLLITE (PG). Broken core-poker chips													
		except in massive sulfide intervals. Foliation = 35 10	2.0	4084	169.5	172.2	2.7	2.08	3.85	38.40					
		fissility = 80-85°. F = 0-5°. 60 6	1.4	4085	172.2	173.7	1.5	5.66	8.04	90.86			8.49	12.06	136.29
		172.2: Increase in mineralization and introduction 65 5	1.5	4086	173.7	175.3	1.6	4.15	4.25	53.49			6.64	6.80	85.58
		of barite in groundmass (Mb). 65 4	1.5	4087	175.3	176.8	1.5	1.30	1.33	25.37			1.95	2.00	38.06
		65 4	1.5	4088	176.8	178.3	1.5	2.13	1.20	18.17			3.20	1.8	27.26
172.2	184.4	MASSIVE SULFIDE (M). Competent. Compositional band 70 5	1.5	4089	178.3	179.8	1.5	1.93	1.85	24.34			2.90	2.78	36.51
		= 85-90°. With some quartz inclusions (MIq). 75 4	1.6	4090	179.8	181.4	1.6	2.83	2.35	51.43			4.53	3.76	82.29
		172.2-175: Barite in groundmass = 10%. 75 4	1.5	4091	181.4	182.9	1.5	3.35	3.05	54.51			5.03	4.58	81.77

LOGGED BY _____ D.D.H. NO 76-U-135 PAGE 9

Interval From	Interval To	DESCRIPTION	Recovery	Sample NO	Interval From	Interval To	Sample Length	Assay Pb	Assay Zn	Assay Ag	Assay Au	Assay Cu	Assay x Pb	Assay x Zn	Assay x Ag
		75 4	1.5	4092	182.9	184.4	1.5	2.60	2.35	40.46			3.90	3.53	60.69
		175.3-184.4: Po and Mgtt as bands-laminae as well as 25 4	1.5	4093	184.4	186.0	1.6	1.13	1.18	22.29					
		clots. Po = 2%.													
		184.4: Change to mineralized graphitic phyllite (PG).		W.Av.	172.2	125.3	3.1	4.88	6.08	71.57			15.13	18.86	221.87
		Contact sharp and clean = 35°.		W.Av.	125.3	179.8	4.5	1.79	1.46	22.63			8.05	6.58	101.83
				W.Av.	179.8	184.4	4.6	2.93	2.58	48.86			13.46	11.87	224.75
184.4	185.5	MINERALIZED GRAPHITIC PHYLLITE (PG). Broken core. Foliation													
		= 80-85°. Short interval of massive sulfide from 185-185.4.													
		185.5: Gradual change to Bleached Phyllite (Sb). Contact													
		arbitrary.													
185.5	190.5	BLEACHED PHYLLITE (Sb). Competent. Generally buff except	4.2		186.0	190.5	4.5								
		for intervals with prominent fuchsite spots. Foliation =													
		75-80°; F_1 = 0-10°.													
		186.5-187: Prominent fuchsite spots. Rx has green mottled													
		appearance.													
		188.9-190.5: Sporadic sulfide presence in F_1 Folds.													
		190.5: Fold nose.													
	190.5	END OF HOLE.													

75 A076

DRILL HOLE : FAGA076

NORTHING : 905,203.8

EASTING : 592,247.0

ELEVATION : 1,301.8

TOTAL DEPTH : 407.1

SECTION : W 80

R.F.E. : S2

RFE DIRECTION: 230

PLUNGE ANGLE : 11

PLUNGE DIRECT: 312

DHD CALC: 1

SS CALC: 0

DETAIL RECORD COUNTS:

NOS ORE-SAMPLES: 29

NOS DOWN-H-SURVEYS: 7

NOS DOWN-H-LITHOLOGY: 93

NOS DOWN-H-STRUCTURE: 117

NOS DOWN-H-FAULTS: 25

NOS DOWN-H-SPLINES: 7

NOS COMPOSITES: 0

DDH: FAGA076 UTM-N: 905,203.8 UTM-E: 592,247.0 UTM-ELEV: 1,301.8 TOTAL DEPTH: 407.1 SECTION: W 80
RFE: S2 RFE DIR: 230 PLUNGE ANGLES: 11 312 DHD CALC: 1 SS CALC: 0

DEPTHS FROM	TO	SAMPLE NO.	INT.	REC.	ROCK UNIT	ASSAYS S.G. PULP	CU %	PB %	ZN %	AG(AA) G/MT	AG(FA) G/MT	AU(FA) G/MT	PO %	PY %	TOT FE	BAO %	HG %	MN %	AS %	BA %	S.G. W.R.
113.1	114.0	08288	.9	.9	4DO	3.08	.04	1.84	3.60	23.00		.48	4	5	10						
114.8	116.0	08289	1.2	.5	4CO	3.29	.04	1.23	2.40	26.00		.62	8	7	15						
139.5	140.5	91029	1.0	.0	4G48			6.70	10.65		62.40										
140.5	142.1	91030	1.6	.0	4E4			4.65	7.20		66.50										
142.1	143.6	91031	1.5	.0	4A4			3.75	5.28	52.40											
144.1	145.9	08290	1.8	1.8	4A4	3.25	.04	2.30	4.00	33.00	36.00	.82	1	9	10						
145.9	147.8	08291	1.9	1.8	4A4	3.14	.05	2.60	2.80	35.00		.48	1	8	9						
147.8	149.3	08292	1.5	1.4	4A4	3.01	.04	1.99	2.30	30.00		.41	1	4	5						
251.3	252.8	08293	1.5	1.5	4D4*	3.80	.06	9.60	14.20	175.00		.62	3	9	12						
264.7	265.5	08294	.8	.7	4A4		.04	1.76	3.80	44.00											
275.1	276.2	08295	1.1	.8	4A4		.02	2.40	6.20	52.00											
280.8	281.4	08296	.6	.5	4A01		.08	1.42	2.30	32.00											
281.8	283.1	08297	1.3	1.3	4A01		.04	1.53	1.58	30.00											
284.5	285.4	91032	.9	.9	4A4			6.94	7.68	91.90											
285.8	287.4	91033	1.6	.0	4D34			5.18	4.92	63.40											
292.8	293.6	08298	.8	.7	4G4		.16	8.80	14.10	138.00											
332.8	336.3	91034	.5	.0	4DE4			6.44	11.65		68.60										
336.3	339.2	91035	.9	.0	4A10			.02	.06		1.00										
341.8	344.0	91036	2.2	.0	4DE			2.35	3.48		35.30										
364.8	366.5	91037	1.7	.0	4E46			4.35	4.44		52.40										
366.5	367.8	08299	1.3	1.3	4A4L		.02	.74	1.36		19.00										
367.8	369.4	91038	1.6	.0	4GO			3.15	3.06		40.40										
369.4	370.6	91039	1.2	.0	4GO			1.00	.31		12.00										
370.6	372.2	91040	1.6	.0	4EG			4.73	3.60		48.30										
372.2	373.4	91041	1.2	.0	4C3			1.60	.22		9.90										
373.4	374.4	91042	1.0	.0	4G08			5.37	4.20		48.30										
374.4	375.7	91043	1.3	.0	4C3			.59	.27		11.00										
375.7	377.3	91044	1.6	.0	4G08			5.03	3.66		50.40										
377.3	378.7	91045	1.4	.0	4G08			4.05	3.42		39.40										
WEIGHTED AVERAGE																					
113.1	114.0		.9	.9		3.08	.04	1.84	3.60	23.00		.48	4	5	10						
114.8	116.0		1.2	.5		3.29	.04	1.23	2.40	26.00		.62	8	7	15						
139.5	143.6		4.1	.0				4.82	7.33	19.17	41.17										
144.1	149.3		5.2	5.0		3.14	.04	2.32	3.07	32.86	12.46	.57	1	7	8						
251.3	252.8		1.5	1.5		3.80	.06	9.60	14.20	175.00		.62	3	9	12						

DDH: FAGA076 UTM-N: 905,203.8 UTM-E: 592,247.0 UTM-ELEV: 1,301.8 TOTAL DEPTH: 407.1 SECTION: W 80
RFE: S2 RFE DIR: 230 PLUNGE ANGLES: 11 312 DHD CALC: 1 SS CALC: 0

DEPTHS FROM	DEPTHS TO	SAMPLE NO.	INT.	REC.	ROCK UNIT	ASSAYS S.G. PULP	CU %	PB %	ZN %	AG(AA) G/MT	AG(FA) G/MT	AU(FA) G/MT	PO %	PY %	TOT FE %	BAO %	HG %	MN %	AS %	BA %	S.G. W.R.
264.7	265.5		.8	.7			.04	1.76	3.80	44.00											
275.1	276.2		1.1	.8			.02	2.40	6.20	52.00											
280.8	281.4		.6	.5			.08	1.42	2.30	32.00											
281.8	283.1		1.3	1.3			.04	1.53	1.58	30.00											
284.5	285.4		.9	.9				6.94	7.68	91.90											
285.8	287.4		1.6	.0				5.18	4.92	63.40											
292.8	293.6		.8	.7			.16	8.80	14.10	138.00											
337.8	339.2		1.4	.0				2.31	4.19		25.14										
341.8	344.0		2.2	.0				2.35	3.48		35.30										
364.8	378.7		13.9	1.3				3.16	2.57		34.55										

DDH: FAGA076 UTM-N: 905,203.8 UTM-E: 592,247.0 UTM-ELEV: 1,301.8 TOTAL DEPTH: 407.1 SECTION: W 80
RFE: S2 RFE DIR: 230 PLUNGE ANGLES: 11 312 DHD CALC: 1 SS CALC: 0

DEPTH	ZENITH	AZIMUTH
0.000	180.000	0.000
61.600	179.000	130.500
122.500	174.000	138.500
183.500	169.700	146.400
244.500	179.000	142.500
305.400	173.000	154.400
387.700	173.000	136.500

DDH: FAGA076 UTM-N: 905,203.8 UTM-E: 592,247.0 UTM-ELEV: 1,301.8 TOTAL DEPTH: 407.1 SECTION: W 80
RFE: 52 RFE DIR: 230 PLUNGE ANGLES: 11 312 DHD CALC: 1 SS CALC: 0

DEPTH	UNIT	CODE	DESC		RECOVERY	IND
18.9	0001				0.0	1
19.2	0002	5B0			0.0	1
20.6	0003	5D3			0.0	1
29.0	0004	5B2			0.0	1
32.3	0005	5D3			0.0	1
73.5	0006	5B2			0.0	1
94.0	0007	5B0			0.0	1
96.4	0008	5D3	[5D0(4880)]		0.0	1
111.7	0009	5B80	(5B8$)		0.0	1
112.6	0010	5B2$			0.0	1
113.1	0011	5D6			0.0	1
114.0	0012	4DC			0.0	1
114.6	0013	5C4*			0.0	1
116.0	0014	4CO			0.0	1
121.3	0015	5B6$			0.0	1
122.6	0016	5B8$			0.0	1
124.3	0017	5D4$			0.0	1
124.8	0018	5B80	&$		0.0	1
125.5	0019	5B8$			0.0	1
127.2	0020	5B0	(5D0 8$)(10Q0)		0.0	1
128.5	0021	5DC			0.0	1
130.1	0022	5B80	(5B0)		0.0	1
132.4	0023	5DC	(5B)		0.0	1
139.5	0024	5B2$			0.0	1
140.5	0025	4G48		NO CORE	0.0	1
142.1	0026	4E4		NO CORE	0.0	1
143.6	0027	4A4		NO CORE	0.0	1
144.1	0028	5C4*			0.0	1
149.3	0029	4A4			0.0	1
151.2	0030	5D4$			0.0	1
153.0	0031	3G9	(5D4$)		0.0	1
154.3	0032	5D4$			0.0	1
171.1	0033	5A0	&$		0.0	1
181.3	0034	3GC	&9		0.0	1
183.6	0035	5A31	9		0.0	1
189.1	0036	3GC	&9		0.0	1
189.6	0037	5D4a			0.0	1
196.9	0038	3G0			0.0	1
250.7	0039	3G9	&0		0.0	1
251.3	0040	4L0			0.0	1
252.8	0041	4D4#	(4L3)		0.0	1
261.1	0042	3G0	&9		0.0	1
264.7	0043	5B2$	(5A$&9)		0.0	1
265.5	0044	4A4			0.0	1
271.1	0045	5B2$	(5A$)		0.0	1
275.1	0046	3G9	&0		0.0	1
276.2	0047	4A4			0.0	1
280.8	0048	3G0	&9		0.0	1
281.4	0049	4A01			0.0	1
281.8	0050	4LC			0.0	1
283.1	0051	4AC4			0.0	1

DDH: FAGA076 UTM-N: 905,203.8 UTM-E: 592,247.0 UTM-ELEV: 1,301.8 TOTAL DEPTH: 407.1 SECTION: W 80
RFE: 52 RFE DIR: 230 PLUNGE ANGLES: 11 312 DHD CALC: 1 SS CALC: 0

DEPTH	UNIT	CODE	DESC		RECOVERY	IND
284.5	0052	5B26			0.0	1
285.4	0053	4A4		NO CORE	0.0	1
285.8	0054	5A9			0.0	1
287.4	0055	4D34		NO CORE	0.0	1
288.6	0056	5B26			0.0	1
292.3	0057	4L2			0.0	1
293.6	0058	4G4			0.0	1
322.7	0059	3GO	(10QO)(5D4$)		0.0	1
323.5	0060	4L27			0.0	1
325.5	0061	3G9			0.0	1
326.4	0062	5C4$			0.0	1
328.3	0063	4AO			0.0	1
331.7	0064	5C4$			0.0	1
333.1	0065	5A9			0.0	1
333.8	0066	5C4$	(5D4$)		0.0	1
337.8	0067	4AO	->5A19		0.0	1
338.3	0068	4D43	5[4E4]		0.0	1
339.2	0069	4A10			0.0	1
339.9	0070	5A1	(4B5)		0.0	1
340.5	0071	5C4			0.0	1
341.8	0072	5A6	(4L)(4A)		0.0	1
342.3	0073	4D43	[4E4]		0.0	1
342.6	0074	4LO	(10QO)		0.0	1
344.0	0075	4D14			0.0	1
348.4	0076	3GO			0.0	1
351.4	0077	4LO	(OQO)(4B4?) MINOR		0.0	1
358.4	0078	3GO			0.0	1
364.8	0079	4LO			0.0	1
365.2	0080	4E46	[4G4]		0.0	1
366.1	0081	4LO		NO CORE	0.0	1
366.5	0082	4E46	[4G4]		0.0	1
367.3	0083	4LO			0.0	1
367.8	0084	4A4			0.0	1
369.2	0085	4G08			0.0	1
370.6	0086	4G80			0.0	1
372.2	0087	4EG		NO CORE	0.0	1
373.4	0088	4C3			0.0	1
374.4	0089	4G06		NO CORE	0.0	1
375.7	0090	4C3			0.0	1
378.7	0091	4G80		NO CORE	0.0	1
404.2	0092	4L27			0.0	1
407.2	0093	5B6			0.5-	1

DDH: FAGA076 UTM-N: 905,207.8 UTM-E: 592,247.0 UTM-ELEV: 1,301.8 TOTAL DEPTH: 407.1 SECTION: W 80
RFE: S2 RFE DIR: 230 PLUNGE ANGLES: 11 312 DHD CALC: 1 SS CALC: 0

DDH	F DEPTH	T DEPTH	FEAT	SYMTRY	S0 ANGLE	S0 DIRECT	S1 ANGLE	S1 DIRECT	S2 ANGLE	S2 DIRECT	RFE CDE	DHDC	SDC	PROCESS
FAGA076	0.0	20.6	CS2		0	0	0	0	70	230	0	1	0	0
FAGA076	0.0	25.0	CS2		0	0	0	0	69	230	0	1	0	0
FAGA076	0.0	29.0	CS2		0	0	0	0	74	230	0	1	0	0
FAGA076	0.0	33.3	CS2		0	0	0	0	80	230	0	1	0	0
FAGA076	0.0	38.0	CS2		0	0	0	0	74	230	0	1	0	0
FAGA076	0.0	42.3	CS2		0	0	0	0	69	230	0	1	0	0
FAGA076	0.0	46.9	CS2		0	0	0	0	63	230	0	1	0	0
FAGA076	0.0	51.2	CS2		0	0	0	0	65	230	0	1	0	0
FAGA076	0.0	56.0	CS2		0	0	0	0	80	230	0	1	0	0
FAGA076	0.0	60.3	CS2		0	0	0	0	60	230	0	1	0	0
FAGA076	0.0	64.9	CS2		0	0	0	0	61	230	0	1	0	0
FAGA076	0.0	69.2	CS2		0	0	0	0	68	230	0	1	0	0
FAGA076	0.0	75.3	CS2		0	0	0	0	80	230	0	1	0	0
FAGA076	0.0	80.2	CS2		0	0	0	0	55	230	0	1	0	0
FAGA076	1.9	81.4	CS2	S	0	0	0	0	0	0	0	1	0	0
FAGA076	0.0	84.3	CS2		0	0	0	0	65	230	0	1	0	0
FAGA076	81.4	84.8	CS2	Z	0	0	0	0	0	0	0	1	0	0
FAGA076	0.0	87.6	CS2		0	0	0	0	63	230	0	1	0	0
FAGA076	0.0	90.3	CS2		0	0	0	0	40	230	0	1	0	0
FAGA076	0.0	93.6	CS2		0	0	0	0	50	230	0	1	0	0
FAGA076	0.0	96.6	CS2		0	0	0	0	60	230	0	1	0	0
FAGA076	84.8	100.5	CS2	M	0	0	0	0	0	0	0	1	0	0
FAGA076	0.0	101.2	CS2		0	0	0	0	66	230	0	1	0	0
FAGA076	0.0	106.7	CS2		0	0	0	0	67	230	0	1	0	0
FAGA076	0.0	110.9	CS2		0	0	0	0	70	230	0	1	0	0
FAGA076	100.5	112.9	CS2	S	0	0	0	0	0	0	0	1	0	0
FAGA076	0.0	113.7	CS2		0	0	0	0	60	230	0	1	0	0
FAGA076	0.0	118.4	CS2		0	0	0	0	70	230	0	1	0	0
FAGA076	0.0	122.8	CS2		0	0	0	0	65	230	0	1	0	0
FAGA076	112.9	125.9	CS2	D	0	0	0	0	0	0	0	1	0	0
FAGA076	0.0	127.5	CS2		0	0	0	0	70	230	0	1	0	0
FAGA076	0.0	130.8	CS2		0	0	0	0	60	230	0	1	0	0
FAGA076	125.9	133.7	CS2	S	0	0	0	0	0	0	0	1	0	0
FAGA076	0.0	134.4	CS2		0	0	0	0	70	230	0	1	0	0
FAGA076	0.0	137.2	CS2		0	0	0	0	60	230	0	1	0	0
FAGA076	0.0	144.8	PS2		0	0	0	0	60	230	0	1	0	0
FAGA076	0.0	147.5	PS2		0	0	0	0	60	230	0	1	0	0
FAGA076	143.6	149.7	PS2	P	0	0	0	0	0	0	0	1	0	0
FAGA076	0.0	152.1	CS2		0	0	0	0	73	230	0	1	0	0
FAGA076	0.0	155.2	CS2		0	0	0	0	62	230	0	1	0	0
FAGA076	0.0	159.9	CS2		0	0	0	0	80	230	0	1	0	0
FAGA076	149.7	160.4	CS2	D	0	0	0	0	0	0	0	1	0	0
FAGA076	0.0	164.4	CS2		0	0	0	0	73	230	0	1	0	0
FAGA076	0.0	168.9	CS2		0	0	0	0	70	230	0	1	0	0
FAGA076	0.0	173.4	CS2		0	0	0	0	75	230	0	1	0	0
FAGA076	160.4	174.3	CS2	S	0	0	0	0	0	0	0	1	0	0
FAGA076	0.0	178.0	CS2		0	0	0	0	84	230	0	1	0	0
FAGA076	174.3	182.5	CS2	Z	0	0	0	0	0	0	0	1	0	0
FAGA076	0.0	183.3	CS2		0	0	0	0	75	230	0	1	0	0
FAGA076	0.0	185.0	CS2		0	0	0	0	80	230	0	1	0	0
FAGA076	0.0	186.2	CS2		0	0	0	0	78	230	0	1	0	0

DDH: FAGA076 UTM-N: 905,203.8 UTM-E: 592,247.0 UTM-ELEV: 1,301.8 TOTAL DEPTH: 407.1 SECTION: W 80
RFE: S2 RFE DIR: 230 PLUNGE ANGLES: 11 312 DHD CALC: 1 SS CALC: 0

DDH	F DEPTH	T DEPTH	FEAT	SYMTRY	S0 ANGLE	S0 DIRECT	S1 ANGLE	S1 DIRECT	S2 ANGLE	S2 DIRECT	RFE CDE	DHDC	SDC	PROCESS
FAGA076	182.5	187.3	CS2	S	0	0	0	0	0	0	0	1	0	0
FAGA076	0.0	190.8	CS2		0	0	0	0	75	230	0	1	0	0
FAGA076	187.3	193.2	CS2	Z	0	0	0	0	0	0	0	1	0	0
FAGA076	0.0	194.9	CS2		0	0	0	0	56	230	0	1	0	0
FAGA076	0.0	199.4	CS2		0	0	0	0	70	230	0	1	0	0
FAGA076	0.0	203.9	CS2		0	0	0	0	67	230	0	1	0	0
FAGA076	0.0	208.5	CS2		0	0	0	0	66	230	0	1	0	0
FAGA076	0.0	212.7	CS2		0	0	0	0	70	230	0	1	0	0
FAGA076	0.0	217.3	CS2		0	0	0	0	74	230	0	1	0	0
FAGA076	0.0	222.0	CS2		0	0	0	0	74	230	0	1	0	0
FAGA076	193.2	225.9	CS2	S	0	0	0	0	0	0	0	1	0	0
FAGA076	0.0	226.2	CS2		0	0	0	0	78	230	0	1	0	0
FAGA076	0.0	230.5	CS2		0	0	0	0	80	230	0	1	0	0
FAGA076	225.9	233.0	CS2	M	0	0	0	0	0	0	0	1	0	0
FAGA076	0.0	235.0	CS2		0	0	0	0	84	230	0	1	0	0
FAGA076	233.0	235.9	PS2	P	0	0	0	0	0	0	0	1	0	0
FAGA076	0.0	238.9	CS2		0	0	0	0	70	230	0	1	0	0
FAGA076	235.9	241.0	CS2	M	0	0	0	0	0	0	0	1	0	0
FAGA076	0.0	243.2	CS2		0	0	0	0	78	230	0	1	0	0
FAGA076	0.0	247.8	CS2		0	0	0	0	78	230	0	1	0	0
FAGA076	241.0	250.7	CS2	Z	0	0	0	0	0	0	0	1	0	0
FAGA076	0.0	251.1	PS2		0	0	0	0	72	230	0	1	0	0
FAGA076	250.7	252.8	PS2	P	0	0	0	0	0	0	0	1	0	0
FAGA076	0.0	255.4	CS2		0	0	0	0	76	230	0	1	0	0
FAGA076	252.8	259.1	CS2	M	0	0	0	0	0	0	0	1	0	0
FAGA076	0.0	260.0	PS2		0	0	0	0	77	230	0	1	0	0
FAGA076	259.1	263.9	PS2	P	0	0	0	0	0	0	0	1	0	0
FAGA076	0.0	264.6	CS2		0	0	0	0	73	230	0	1	0	0
FAGA076	0.0	269.1	CS2		0	0	0	0	69	230	0	1	0	0
FAGA076	0.0	273.4	CS2		0	0	0	0	69	230	0	1	0	0
FAGA076	0.0	278.0	CS2		0	0	0	0	76	230	0	1	0	0
FAGA076	0.0	282.7	CS2		0	0	0	0	70	230	0	1	0	0
FAGA076	263.9	285.8	CS2	S	0	0	0	0	0	0	0	1	0	0
FAGA076	0.0	288.0	PS2		0	0	0	0	70	230	0	1	0	0
FAGA076	0.0	291.4	PS2		0	0	0	0	60	230	0	1	0	0
FAGA076	285.8	293.8	PS2	P	0	0	0	0	0	0	0	1	0	0
FAGA076	0.0	294.9	CS2		0	0	0	0	60	230	0	1	0	0
FAGA076	0.0	302.1	CS2		0	0	0	0	75	230	0	1	0	0
FAGA076	0.0	306.6	CS2		0	0	0	0	70	230	0	1	0	0
FAGA076	0.0	311.0	CS2		0	0	0	0	62	230	0	1	0	0
FAGA076	0.0	315.5	CS2		0	0	0	0	76	230	0	1	0	0
FAGA076	293.8	315.9	CS2	S	0	0	0	0	0	0	0	1	0	0
FAGA076	0.0	320.5	CS2		0	0	0	0	65	230	0	1	0	0
FAGA076	315.9	322.6	CS2	Z	0	0	0	0	0	0	0	1	0	0
FAGA076	0.0	324.4	PS2		0	0	0	0	60	230	0	1	0	0
FAGA076	0.0	328.9	PS2		0	0	0	0	65	230	0	1	0	0
FAGA076	0.0	332.9	PS2		0	0	0	0	70	230	0	1	0	0
FAGA076	0.0	337.1	PS2		0	0	0	0	68	230	0	1	0	0
FAGA076	322.6	340.8	PS2	P	0	0	0	0	0	0	0	1	0	0
FAGA076	0.0	341.2	CS2		0	0	0	0	74	230	0	1	0	0
FAGA076	0.0	345.6	CS2		0	0	0	0	60	230	0	1	0	0

DDH: FAGA076 UTM-N: 905,203.8 UTM-E: 592,247.0 UTM-ELEV: 1,301.8 TOTAL DEPTH: 407.1 SECTION: W 80
RFE: S2 RFE DIR: 230 PLUNGE ANGLES: 11 312 DHD CALC: 1 SS CALC: 0

DDH	F DEPTH	T DEPTH	FEAT	SYMTRY	S0 ANGLE	S0 DIRECT	S1 ANGLE	S1 DIRECT	S2 ANGLE	S2 DIRECT	RFE CDE	DHDC	SDC	PROCESS
FAGA076	340.9	345.9	CS2	Z	0	0	0	0	0	0	0	1	0	0
FAGA076	345.9	348.7	PS2	P	0	0	0	0	0	0	0	1	0	0
FAGA076	0.0	350.4	CS2		0	0	0	0	73	230	0	1	0	0
FAGA076	348.7	354.5	CS2	M	0	0	0	0	0	0	0	1	0	0
FAGA076	0.0	354.8	CS2		0	0	0	0	70	230	0	1	0	0
FAGA076	0.0	359.4	CS2		0	0	0	0	70	230	0	1	0	0
FAGA076	0.0	362.7	CS2		0	0	0	0	70	230	0	1	0	0
FAGA076	354.5	364.8	CS2	S	0	0	0	0	0	0	0	1	0	0
FAGA076	0.0	367.3	PS2		0	0	0	0	74	230	0	1	0	0
FAGA076	0.0	381.0	PS2		0	0	0	0	68	230	0	1	0	0
FAGA076	0.0	385.3	PS2		0	0	0	0	70	230	0	1	0	0
FAGA076	0.0	393.0	PS2		0	0	0	0	69	230	0	1	0	0
FAGA076	0.0	399.1	PS2		0	0	0	0	70	230	0	1	0	0
FAGA076	0.0	405.1	PS2		0	0	0	0	70	230	0	1	0	0
FAGA076	364.8	407.2	PS2	P	0	0	0	0	0	0	0	1	0	1

DDH: FAGA076 UTM-N: 905,203.8 UTM-E: 592,247.0 UTM-ELEV: 1,301.8 TOTAL DEPTH: 407.1 SECTION: W 80
RFE: S2 RFE DIR: 230 PLUNGE ANGLES: 11 312 DHD CALC: 1 SS CALC: 0

DDH	F DEPTH	T DEPTH	FEAT	REC CD	PARLL	UPPER PLANE		INTERNAL PLANE		LOWER PLANE		DHD
FAGA076	32.3	32.9	RG?			0	0	0	0	0	3	1
FAGA076	0.0	65.2	1X			0	0	0	0	0	3	1
FAGA076	71.3	72.2	BG			0	0	0	0	0	3	1
FAGA076	72.2	72.8	G			0	0	0	0	0	3	1
FAGA076	72.8	73.4	QF?			0	0	0	0	0	3	1
FAGA076	74.6	75.2	P	0		0	0	0	0	0	3	1
FAGA076	0.0	94.0	BP	5		0	0	0	0	0	3	1
FAGA076	94.0	96.0	BP	3		0	0	0	0	0	3	1
FAGA076	103.3	105.9	BP	4		0	0	0	0	0	3	1
FAGA076	115.9	121.3	BGP			0	0	0	0	0	3	1
FAGA076	118.8	122.5	BP	2		0	0	0	0	0	3	1
FAGA076	136.3	139.5	G3F			60	0	60	0	0	3	1
FAGA076	139.5	143.5	NNN			0	0	0	0	0	3	1
FAGA076	0.0	148.8	G			0	0	0	0	0	3	1
FAGA076	246.8	247.1	BG			0	0	0	0	0	3	1
FAGA076	284.4	285.3	NNN			0	0	0	0	0	3	1
FAGA076	285.8	287.3	NNN			0	0	0	0	0	3	1
FAGA076	0.0	295.9	G			0	0	60	0	0	3	1
FAGA076	326.4	328.2				0	0	0	0	0	3	1
FAGA076	340.9	341.1	QF?			0	0	0	0	0	3	1
FAGA076	341.1	341.3	XF?			0	0	0	0	0	3	1
FAGA076	364.8	366.5	NNN			0	0	0	0	0	3	1
FAGA076	370.6	372.1	NNN			0	0	0	0	0	3	1
FAGA076	373.3	374.4	NNN			0	0	0	0	0	3	1
FAGA076	375.6	378.7	NNN			0	0	0	0	0	3	1

CYPRUS ANVIL MINING CORPORATION

DIAMOND DRILL CORE LOG

Hole Number: 75-A76

Project: Grum Relog

Location: Vangorda Plateau

Claim: _____

UTM Terr. Plane Co-ords.: 6905203.83 N

1979 HIW Survey 592246.97 E

Grid Co-ords.: 80 W/8N

1979 HIW Survey Elevation: 1301.77

Total Depth: 1336ft (407.21)

Fabric Orientation Diagram:

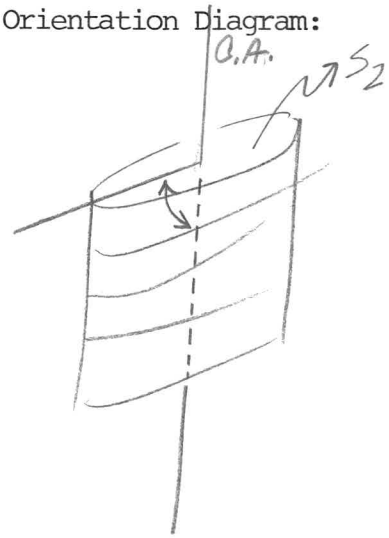

All symmetry determinations looking

NW with S_2 dipping

SW with dip azimuth 230.

Purpose: _____

RC Logged by: JSM Date(s) Logged: June 16-June 20 1980

Drilling Contractor: _____

Core:	Size	From	To	Collar Cased and Capped:
	BQ	62	EOH	

Started: May 17, 1975 Completed: May 26, 1975

Cyprus Anvil Mining Corp.

Diamond Drill Core Log

DDH 75-A076

Code	Drillhole	Elevation	Northing	Easting	Comments
1	2 8	10 16	17 24	25 32	34 48
T	75-A076	1301.8	9052038.8	592247.0	FEET

Code	Drillhole	Depth	Zenith Angle	True Azimuth	Comments
1	2 8	10 14	22 26	28 32	34 56
R	75-A076	0 0	180.0	0.0	ATCOLLAR
R	75-A076	202.0	179.0	130.5	TROPARI
R	75-A076	402.0	174.0	138.5	
R	75-A076	602.0	169.7	146.4	
R	75-A076	802.0	179.0	142.5	
R	75-A076	1002.0	173.0	154.4	
R	75-A076	1272.0	173.0	136.5	
R		.	.	.	
R		.	.	.	
R		.	.	.	
R		.	.	.	
R		.	.	.	
R		.	.	.	
R		.	.	.	
R		.	.	.	
R		.	.	.	

Code	Drillhole	Comments, Errant Remarks, Snivellings and/or Lewd Suggestions
1	2 8	10 47
		SECTIONS COMPLETELY SAMPLED FO
		MET TESTS

DDH 75-A076 (2–8)

Cyprus Anvil Mining Corp.
Lithologic Log

Logged By: JSM

Code (1)	From (10–14)	To (16–20)	Unit (22–23)	Code (25–27)	Description
L	0 0	62 0	1		O/B
L	62 0	63 0	2	5B0	3/4" py cube above lower ctc
L	63 0	67 5	3	5D3	massive w/ cc bands
L	67 5	95 3	4	5B2	w/ qtz boudins, py blebs up to 1/2", note non-laminated, gray calcareous layers folded ($S_0 // S_1$)
L	95 3	106 0	5	5D3	strongly calcareous (ankeritic), massive w/ cc bands, minor dissem py along irregular cc-filled fractures,
L	106 0	241 0	6	5B2	as unit 4, 106-108 = rubbly + clay altered (fault? depositional? diagenetic? metamorphic ?)
					py blebs assoc w/ qtz boudins
					OQO up to 1.0' usu. w/ $CO_3^=$
					slightly chloritic when not carbon-rich
					increasingly carbonaceous 141.0-160.0 ~ (→5A)
					$CO_3^=$ is both cc & ankerite
					minor auto bxiation @ 214.0 w/ some ankerite fracture filling
					234-237 broken + gougy; 237-239 gouge; 239-241 OQO+$CO_3^=$ = fault?
L	241 0	308 5	7	5B0	both cc + ankerite, wash out 245-247, @EOI OQO + broken recovery, (<50% recovery)
L	308 5	316 4	8	5D3	308.5-315.0 (2.8 ft recovery) = broken + altered (sericite chlorite + Fe oxide), could be 5B, 5D or gradational ctc
					315.0-316.4 good recovery, massive green w/ cc bands
L	316 4	366 5	9	5B8	both cc + ankerite, 339-347.5 ⇒ 2.3 ft recovery 0.9 ft OQO @ 360'
L	366 5	369 5	10	5B2	6 → 5A
L	369 5	371 0	11	5D6	Fe stained + sfd (py) rich to 370, strong clay + mariposite alteration to 371.0
L	371 0	374 0	12	4C0	red sphal, galena + py bands in white qtz, <5% PbZn
L	374 0	376 7	13	5D~~6~~ C4 *mot	strong mariposite alteration, texture reminiscent of mottled 5D
L	376 7	380 5	14	4C0	small ugly sfd zone w/ secondary py + topped by massive py <5% PbZn
L	380 5	398 0	15	5A6	(5B26) completely broken recovery. Gouge @ top & bottom of section.
L	398 0	402 2	16	5B0	only 1.2' recovered
L	402 2	407 7	17	5D3	

July 10 Relog DSJ

5B80 (5B8* dolo) 5B2* dolo

NB S *

NB S 5B6* dolo 5B8* dol 5D4* dolo

DDH 75-A076 (2 … 8)

Cyprus Anvil Mining Corp.
Lithologic Log

Logged By: JSM

Code	From	To	Unit	Code	Description
1	10 … 14	16 … 20	22 23	25 … 27	
L	14017	14096	1 8	5 B 8	5BBO±* dolo
L	14096	14116	1 9	5 D B	5BB* dolo
L	14116	14173	2 0	5 B 2	5BO(5DO±) dolo(QQO) interbed of 5D @ 414', 5B2 @ TOI → 5BB, cc+ankerite
L	14173	14216	2 1	5 D 3	5DO→ massive w/ cc bands
L	14216	14264	2 2	5 B 2	5BBO(5DO) 8 as unit 20
L	14267	14344	2 3	5 D 3	5DO w/ 5B interbeds 428.4 - 429.5, 433.3 - 433.8
L	14344	14578	2 4	5 B 2	5BZ* → 5A @ EOI (broken) 454 to 457.8 gouge broken core // S_2 major fault
L	14578	14610	2 5	4 D 4	KA. 8 No core KA sample# 1584 massive sfd pyrite, red sphal, qtz eyes, black mgt, 75% sfd 10-15% PbZn"
L	14610	14662	2 6	4 D 0	mt ? No core KA sample# 1585 "massive sfd, banded; py sphal, minor po, locally brxiated, 70% sfd 15-20% PbZn"
	14662	14710	2 7	4 A 4	KA ? No core KA sample# 1586 " 15-20% sfd, 9% PbZn "
L	14710	14728	2 8	5 D 3	C4 *mot strong mariposite alteration @ TOI then 5D3 ankeritic
					2→ of mottled 5D ? or 5D43*
L	14728	14899	2 9	4 A 4	~6% PbZn, red sphal+gal; Minor 4CO in narrow interbands <10cm unit mot
L	14899	14960	3 0	5 D 3	ankerite, minor mariposite blebs // 14 // Jonged 488.4-475'
L	14960	15020	3 1	5 A 0	5D4*dol/3G4(5DA*) 2/6" interbds of 5D3 ankeritic, minor py
L	15020	15063	3 2	5 D 3	5D4* ankeritic, w/ minor py (stringers // S_1 // S_2 and veinlets), minor mariposite blebs & QQO (5D34 JSM)
L	15063	15161	3 3	5 A 6	5AO±*dol minor py blebs laminae + veinlets + po same, up to 1" blebs, QQO @ 507-508, 509-510, 517, occasional phyllite clasts, only minor $CO_3^=$
L	15161	15914	3 4	5 B 6	3GO±9 (2)
L	15914	16012	3 5	5 A 3	(5A319) 9 minor po → 5A6 @ EOI
L	16012	16210	3 6	5 B 6	3GO±(2) (2) as unit 33-34
L	16210	16212	3 7	5 D 6	5D4* ank altered, sericite + Fe stain
L	16212	18212	3 8	5 B 6	3GO(622 to 646) (2) TOI → 4L (sericite developed but not really white)
					646 to 822. 3G 9% O spotty sericite bleaching continues to ~675 sometimes assoc w QQO (qtz veins up to 3ft long, fractures w/in QQO contain py + po, some massive po)
					Unit becomes a uniform gray thinly banded non-calcareous phyllite; calcareous interval @ 745, occasional QQO; minor py + po; thin interbed of calcareous 5D (?) @ 791.5
					Less carbonaceous material 801.5 - 810.0, broken & gouge 810 - 811
L	18212	18245	3 9	4 L O	non calcareous, altered 5B

DDH 75-A076 (2 8)

Cyprus Anvil Mining Corp.
Lithologic Log

Logged By: JSM

Code	From		To		Unit	Code	Description
1	10	14	16	20	22 23	25 27	
L	1821	45	1821	95	410	4D14	NB * (4L3) .5' bands 4L @ 825' & 828.5 minor CO3 clots thin sect.
L	1829	55	1851	67	411	5B16	360±2 (2) as unit 37 w/ thin Fe-oxide laminae, minor qtz bands
L	1851	67	1861	85	412	5A16	5B2*dol (5A*dol) minor py (+ red sphal @ 866.5) minor OQO, gradational,
							in spots w/ 5B26 and w/ a sfd poor 4A elsewhere.
L	1861	85	1871	20	413	4A10	<5% sfd py + red sphal Not split by K.A.
L	1871	10	1881	95	414	5A16	5B2*dol (5A*dol) → 5B26 w/ 6" 4A as unit 42 @ EOI w/ OQO, same as above unit in fold
L							massive po @ 882, minor py
L	1881	95	1901	25	415	5B12	369±0 6
L	1901	25	1901	62	416	4A14	(1) red sphal + galena, ~20% sfd, 6-8% PbZn graphitic
L	1901	62	1921	13	417	5B12	360±9 6 minor py blebs, OQO up to 0.5ft
L	1921	13	1921	31	418	4A14	1 py, red sphal, galena ~5% PbZn
L	1921	31	1921	47	419	4L10	
L	1921	47	1921	89	510	4A14	1 as unit 47 losing PbZn below 927.5 → 5A4
L	1921	89	1931	33	511	5B12	6 bleached near OQO
L	1931	33	1931	63	512	4A14	? No core KA sample # 1593 "band. sfd in phyllite gangue
							50-60% sfd 15% PbZn"
L	1931	63	1931	77	513	5A14	<1% PbZn red sphal, galena, py
L	1931	77	1942	99	514	4D10	NO core 403 to 425 KA sample # 1594 "40% sfd, pyrite, sphal,
							galena, minor cpy, 10% PbZn
L	1942	99	1946	75	515	5B12	6 loses carbon + gains sericite downinterval, minor py
L	1946	75	1960	75	516	4L12	minor py, sph laminae To 949.5 1' qtz vein @ 955 & 2' qtz vein @ EOI
L	1960	75	1963	25	517	4G14	split minor honey colored sphal, galena, ~20% py.
							(KA assays say 9.5% Pb 14.4% Zn ??)
							extremely fine grained
L	1963	25	1051	87	518	5B12	360(OQO) (5D4*dol) 1.0ft @ TOI = 4L 5B26 → altered 5B 6" gouge //s @ 971
							967.3 - 990.7 Box 36 missing
							some sericite, minor py
L	1051	87	1061	15	519	4L10	4L27 minor po + py (4L27)
L	1061	15	1061	80	610	5B12	369 6
L	1061	80	1071	10	611	5D1/2 4	5C4* dol fuchs 4A0 *mot cc+ankerite mariposite blebs + laminae, altered mottled 5D
L	1071	10	1071	70	612	5A19	py, brxiated along stp fractures and filled w/ $CO_3^=$
L	1071	70	1088	26	613	5D1/2	5C4* 5C *mot + mass slightly calcareous (slow fizz) mottled 5D to 1087.4
							then massive ankeritic w/ minor mariposite (5D43)
L	1088	26	1092	86	614	5A19	4L @ TOI (6"), then 2.0ft OQO, then 1.7ft 5A9 minor py
	1092	80	1095	00	615	5D16	5C4*mot (5D4*) mostly mottled, note 2" band @ 1093.5 w/ soft angular
							dark fragments (phyllite?) in soft white non calc matrix w/

DDH 75-4076 (2 … 8)

Cyprus Anvil Mining Corp.
Lithologic Log

Logged By: JSM

Code	From	To	Unit	Code	Description
	10 … 14	16 … 20	22 23	25 … 27	
					po dissem through frags + as bleb in matrix
					→ 4L @ EOI
Missing in check? L	10950	11084	66	4A0	→ 5A91 (because banding is too even & regular to be 4A) in spots
					py = only sfd visible, some porphyroblastic (5mm). Concentrations of remobilized py near fractures
4045 L	11084	11099	67	4D4	red sphal, gal, py. 70-80% sfd, ~20% PbZn [4045] [4435] [4447]
L	11099	11130	68	4A1	py = only sfd visible
5A1 (4435) L	11130	11153	69	5A6	? This interval is strongly iron-stained due to large (3") po concentrations so the rock type is hard to identify, maybe 5B2. minor py blebs
L	11153	11172	70	5D6 C4 mot	mottled w/ minor mariposite $CO_3^=$ fracture fills
L	11172	11214	71	5A6	top 1.4 ft is good 5A then → bleached, red sphalerite-bearing 4A, then → 4L, then 0.8ft broken gouge, then 0.5 ft of bxia w/ graphite matrix & clasts (angular) of massive py and of qtz. Fault?
Missing L	11214	11229	72	4D4	honey-sphalerite, galena + py, 70% sfd, ~6% PbZn [4043] [4447]
L	11229	11240	73	4L0	+ QQO
Missing L	11229	11286	74	4D1	A orange → red sphal, gal + py ~6% PbZn
					more siliceous down interval, interbdd w/ 5D?
360 L	11286	11432	75	5B6	
L	11432	11530	76	4L0	note sfd zone 1.0 ft @ 1145 (1.5" po bands @ top & bottom w/ scattered py porphyroblasts. 4BA w/ red sphal & gal in center of zone)
					minor py blebs, esp near QQO
360 L	11530	11760	77	5B6	some sericite development
box strade 1179. L	11760	11970	78	4L0	w/ py blebs + fracture fillings
					→ 4L6 last 10.0 ft (still highly altered but green chlorite instead of white sericite)
L	11970	11980	79	4E4	No core KA sample # 1600 "sulfide zone: bxia massive [4045]
L	11980	12010	80	4L0	sfd w/ parting of bleached quartz sericite phyllite [4044]
L	12010	12025	81	4E4	@ 1198-1201 (4L) Sfd 50-70% py, 15-20% PbZn; [4046] avg 10% over section; barite + gypsum in fractures"
					(AG?)
L	12025	12050	82	4L0	
X L	12050	12067	83	4A4	<5% red sphal + galena 2" 4L @ EOI

DDH 75-A076 (2–8)

Cyprus Anvil Mining Corp.
Lithologic Log

Logged By: JSM

	Code (1)	From (10–14)	To (16–20)	Unit (22–23)	Code (25–27)	Description
NS	L	12067	12112	84	4G4	80% sfd: py (po @ TOI) orange sphalerite galena, ~6% PbZn mgt blebs ~1-2%, some bxiated fractures w/ cc filling mgt thruout 4G4B JM
NS	L	12112	12160	85	4G0	v. fine grained, ~1% PbZn, minor mgt blebs, vuggy fractures v. minor cpy (?) in units 83+84 4G8 JM
KA	L	12160	12210	86	4EG	No core KA sample # 1903 massive banded sfd 80% sfd 8% PbZn
N	L	12210	12250	87	~~4C1~~ 4C3	~50% sfd, 1-2% PbZn, banded yellowed $CO_3^=$ bands esp below 1223.5 vugs filled w/ barite rosettes
KA	L	12250	12285	88	4G4	No core KA sample #1905 "banded sfd 50-60% sfd 7.5% PbZn, note mgt + bands of white barite" 4G4B JM ? could be $CO_3^=$ as in 86
N	L	12285	12325	89	~~4C0~~ 4C3	~50% sfd <1% PbZn (sphal + gal visible @ 1230.5) KA logged minor mgt, po, cpy – no longer visible Note: box 47 1228.5-1250.7 broken core jumbled
KA	L	12325	12425	90	4G0	No core KA sample #1907-1908 "banded sfd in qtz sericite gangue, banding obvious due to dark pyrrhotite mgt + sphal, veins of white barite, 1-2% mgt." 4G8 JM
	L	12425	13260	91	4L0	py + po biotite-rich 1282-1287
	L	13260	13360	92	5B6	

DDH 75-A076 (2 / 8) Cyprus Anvil Mining Corp.

Structural Log

Logged By: JSM

Code	From	To	Feature	Sym	S_1 Dip Direct.	S_2 Dip Direct.	Description
1	10 14	16 20	22 24	26	28 32	34 38	
S		162					O/B
S		1677	CS12			710 2310	S region 62.0 - 267.2
S		1820	CS12			619 2310	well defined
S		1950	CS12			74 2310	
S		10194	CS12			810 2310	
S		12147	CS12			74 2310	
S		13189	CS12			619 2310	
S		15138	CS12			613 2310	
S		16180	CS12			615 2310	
S		18138	CS12			810 2310	
S		19178	CS12			610 2310	
S		21129	CS12			611 2310	
S		22170	CS12			618 2310	
S		24170	CS12			810 2310	
S		26130	CS12			55 2310	
S		26172	F12	E			Z region 267.2 - 278.3
S		27167	CS12			615 2310	
S		27833	F12	Z			M region 278.3 - 329.7
S		28173	CS12			613 2310	~ 70% Z sym
S		29162	CS12			410 2310	
S		31070	CS12			510 2310	
S		31169	CS12			610 2310	
S		32197	F12	M			S region 329.7 - 370.3
S		33120	CS12			616 2310	
S		35100	CS12			617 2310	
S		36138	CS12			710 2310	
S		37103	F12	S			D region 370.3 - 413.2
S		37130	CS12			610 2310	D sym 371, & 405-413
S		38184	CS12			710 2310	371.5-405 sfds + mottled SD
S		40130	CS12			615 2310	∴ indeterminate (R?)
S		41132	F12	D			S region 413.2 - 438.5
S		41184	CS12			710 2310	
S		42190	CS12			610 2310	
S		43805	F12	S			symmetry indeterminate 438.5 - 457.8
S		44110	CS12			710 2310	due to F_4 kinking of S_2
S		45100	CS12			610 2310	

DDH 75-A076 (2 8)

Cyprus Anvil Mining Corp.
Structural Log

Logged By: JSM

Code	From	To	Feature	Sym	S_1 Dip	S_1 Direct.	S_2 Dip	S_2 Direct.	Description
1	10 14	16 20	22 24	26	28	32	34	38	
S		4578	F2	?					No core no sym 457.8 - 471.0
S		4710	F2	?					R(?) region 471.0-491.0
S		4750	PS2				60	230	banded sfds + some 5D
S		4840	PS2				60	230	
S		4910	F2	R					D region 491.0 - 526.2
S		4990	CS2				73	230	5D+5B+5A
S		5093	CS2				62	230	
S		5245	CS2				80	230	
S		5262	F2	D					S region 526.2-571.8
S		5393	CS2				73	230	
S		5540	CS2				70	230	
S		569	CS2				75	230	
S		5718	F2	E					Z region 571.8 - 598.6
S		5840	CS2				84	230	
S		5986	F2	3					S region 598.6 - 614.6
S		6015	CS2				75	230	
S		6068	CS2				80	230	
S		6110	CS2				78	230	
S		6146	F2	E					Z region 614.6-633.8
S		6260	CS2				75	230	
S		6338	F2	3					S region 633.8 - 741.2
S		6394	CS2				56	230	
S		6543	CS2				70	230	
S		6690	CS2				67	230	
S		6842	CS2				66	230	
S		6978	CS2				70	230	
S		7130	CS2				74	230	
S		7284	CS2				74	230	
S		7412	F2	S					M region 741.2 - 764.5
S		7420	CS2				78	230	
S		7563	CS2				80	230	
S		7645	F2	M					P region 764.5 774.0
S		7709	CS2				84	230	
S		7740	F2	P					M region 774.0 - 790.6
S		7837	CS2				70	230	
S		7906	F2	M					Z region 790.6 - 821.0

DDH Z5-A-076 (2 / 8)

Cyprus Anvil Mining Corp.
Structural Log

Logged By: JSM

Code	From	To	Feature	Sym	S_1 Dip Direct.	S_2 Dip Direct.	Description
1	10 14	16 20	22 24	26	28 32	34 38	
S		7980	CS12			78 2310	
S		8130	CS12			78 2310	
S		8225	F12	Z			R region 822.5-829.5
S		8237	PS12			72 2310	banded sfd + AL
S		8295	F12	R			M region 829.5 - 850.0
S		8380	CS12			76 2310	
S		8500	F12	M			P region 850.0 865.8
S		8530	PS12			77 2310	some D sym
S		8658	F12	P			S region 865.8 - 937.7
S		8680	CS12			73 2310	
S		8829	CS12			69 2310	
S		8970	CS12			69 2310	
S		9120	CS12			76 2310	
S		9275	CS12			70 2310	
S		9377	F12	S			R region? 937.7 964.0
S		9450	PS12			70 2310	missing core, banded sfds + AL
S		9560	PS12			60 2310	
S		9640	F12	R			S region 964.0 - 1036.4
S		9675	CS12			60 2310	→ core box missing
S		9910	CS12			75 2310	TOI poorly defined sym because
S		10060	CS12			70 2310	of missing box & → P to 1000
S		10205	CS12			62 2310	
S		10350	CS12			76 2310	
S		10364	F12	Z			Z region 1036.4 - 1058.5
S		10515	CS12			65 2310	
S		10585	F12	Z			P region 1058.5 - 1118.0
S		10644	PS12			60 2310	5B, 4A, 5D, 5A
S		10790	PS12			65 2310	Z sym 1095.9 - 1097.4
S		10923	PS12			70 2310	S sym 1106.0
S		11060	PS12			68 2310	
S		11180	F12	P			Z region 1118.0 - 1135.0
S		11195	CS12			74 2310	
S		11340	CS12			60 2310	
S		11350	F12	Z			P region 1135.0 - 1144.0
S		11440	F12	P			M region 1144.0 - 1163.0
S		11495	CS12			73 2310	

DDH 75-A076 (2 / 8)

Cyprus Anvil Mining Corp.
Structural Log

Logged By: JSM

Code	From	To	Feature	Sym	S_1 Dip Direct.	S_2 Dip Direct.	Description
1	10 14	16 20	22 24	26	28 32	34 38	
S		1163.0	F2	M			S region 1163-1197
S		1164.0	CS2			70 230	not well defined until EOI
S		1179.0	CS2			70 230	
S		1190.0	CS2			70 230	
S		1197.0	F2S				P region? 1197-EOH
S		1205.0	PS2			7A 230	sfds missing core, 4L, 5B
S		1250.0	PS2			68 230	↳ should it be called R?
S		1264.0	PS2			70 230	
S		1289.5	PS2			69 230	
S		1309.5	PS2			70 230	
S		1329.0	PS2			70 230	

DDH FAGA076 (2 Feet 8)

Cyprus Anvil Mining Corp.
Structural Log

Page _____ of _____

Date: _____ Logged By: _____

Code	From	To	Feature	Sym	S_0 Dip Direct.	S_1 Dip Direct.	S_2 Dip Direct	Description
1	10 14	16 20	22 24	26	28 32	34 38	40 44	
F	1060	1080	RG?					rubbly & clay altered
		2140	1X					bxia
	2340	2370	BG					broken & gougy
	2370	2390	G					gouge
	2390	2410	QF?					OQO + CO_3 = fault?
	2450	2470	P	0				wash out
		3085	BP	5				< 50% rec'y
	3085	3150	BP	3				2.8' rec'y
	3390	3475	BP	4				2.3' "
	3805	3980	BGP					gouge @ top & base, broken core
	3900	4022	BP	2				1.2' rec'y.
	4540	4578	G3F		60 RFE		60 BFE	gouge ∥ S_2, broken core
		4884	G					" 0.5'
	8100	8110	BG					broken and gouged
		9710	G			60 BFE		gouge, 6" ∥ S_2
	10710	10770	X					bxia, CO_3 filled along strip fracs.
	11186	11194	GF?					gouge & broken core
	11194	11199	XF?					bxia
	4578	4710	NNN					
	9333	9363	NNN					
	9377	9429	NNN					
	11970	12025	NNN					
	12160	12210	NNN					
	12250	12285	NNN					
	12325	12425	NNN					

DDH 75-A076 Cyprus Anvil Mining Corp

Page 12 of 14

Logged by TST

ASSAY LOG (SAMPLER'S COPY) Date Aug 5/81 Sampled by

CODE	FROM	TO	SAMPLE	INTR.	REC (m)	UNIT	DESCRIPTION KERR DDH #
	10 14	16 20	22 26	28 30	32 34	36 40	42
P	3710	3740	82888	30	30	4CO1	
P	3767	3805	82889	38	18	4CO1	
P	4578	4610	91029	32	32	4D48	K.A. sampled. No core left 1584
P	4610	4662	91030	52	43	4D01	" " " " " 1585
P	4662	4710	91031	48	48	4A41	" " " " " 1586
P	4728	4788	82900	60	60	4A41	(4CO)
P	4788	4848	82901	60	59	4A41	(4CO)
P	4848	4899	82902	51	47	4A41	(4CO)
P	8245	8295	82903	50	48	4D4*	(423)
P	8685	8710	82904	25	25	4A01	
P	9025	9062	82905	37	25	4A41	
P	9213	9231	82906	18	18	4A41	
P	9247	9289	82907	42	42	4A41	
P	9333	9363	91032	30	29	4A41	K.A. Sampled. No core left 1593
P	9377	9429	91033	52	52	4D01	" " " " " 1594
P	9607	9632	82908	25	25	4G41	
P	11084	11099	91034	15	15	4D41	Core missing. " " 1597
P	11099	11130	91035	31	31	4A11	" " " " 1598
P	11214	11286	91036	73	73	4D41	(4LO) KA Sampled No core 1599 left
P	11970	12025	91037	53	50	4E41	(4LO) K.A. Sampled. No core left 1600
P	12050	12067	82909	17	17	4A41	
P	12067	12112	91038	53	53	4G41	K.A. Sampled. No core 1901 left.
P	12112	12160	91039	40	40	4G01	" " " " 1902
P	12160	12210	91040	50	50	4E41	" " " " 1903
P	12210	12250	91041	40	40	4C11	" " " " 1904

Feet

Why not 933 as per KA?

If the core is missing how can you change KA footages?

should be 12130

others remain in data base as given here

C.A.M.C. 1981 - E - 5

Note: 91032 → 91039 include some inexplicable differences from original KA assay footages
91038-39 have been corrected as seem to be transcription error

DDH 75-A076 Cyprus Anvil Mining Corp

Page 13 of 14

Logged by RST

ASSAY LOG (SAMPLER'S COPY) Date Aug 5/81 Sampled by

Feet

CODE	FROM	TO	SAMPLE	INTR.	REC (m)	UNIT	DESCRIPTION
	10 14	16 20	22 26	28 30	32 34	36 40	42
P	1225.0	1228.5	911042	3.5	3.5	4G4	K.A. sampled No core 1905
P	1228.5	1232.5	911043	4.0	4.0	4C0	" " " 1906
P	1232.5	1238.0	911044	5.5	5.5	4G0	" " 1907
P	1238.0	1242.5	911045	4.5	4.5	4G0	" " 1908
							End of Hole @ 1336'
							NB K refers to K.A. sample No.

C.A.M.C. 1981 - E - 5

DDH 75-A076 (2 8)

Cyprus Anvil Mining Corp.
Geochemical Log (Sampler's Copy)

Logged By: JSM

Sampled By:

Code	From	To	Sample No.	Description		
1	10 14	16 20	22 27	Length	Recovered	Unit
P	3710	3740	11582	KA 3.0	3.0	4B4
P	3785	3805	11583	KA 2.0	2.0	4B4
P	4578	4610	11584	KA 3.2	3.2	* 4D8 ?
P	4610	4662	11585	KA 5.2	4.3	* 4D0 ?
P	4662	4710	11586	KA 4.8	4.8	* 4A4 ?
P	4728	4786	11587	KA 5.8	5.8	4A4
P	4786	4826	11588	KA 4.0	4.0	4A4
P	4826	4899	11589	KA 7.3	7.3	4A4
P	8242	8295	11590	KA 5.3	5.3	4D4
P	9003	9063	11591	KA 6.0	6.0	5B26 → 4A41
P	9213	9263	11592	KA 5.0	5.0	4A41 → 4L → 4A41
P	9334	9363	11593	KA 2.9	2.9	* 4 ?
P	9377	9430	11594	KA 5.3	5.3	* 4 ?
P	9607	9632	11595	KA 2.5	2.5	4G4
P	11054	11084	11596	KA 3.0	3.0	4A → 4D4
P	11084	11101	11597	KA 1.7	1.7	4D4
P	11101	11131	11598	KA 3.0	3.0	4A
P	11210	11285	11599	KA 7.5	7.5	4D4 → 4L → 4D14
P	11970	12023	11600	KA 5.3	5.0	4E4 + 4L
P	12067	12120	11901	KA 5.3	5.3	4G4
P	12120	12160	11902	KA 4.0	4.0	4G
P	12160	12210	11903	KA 5.0	5.0	* 4E? 4G?
P	12210	12250	11904	KA 5.0	5.0	4C1
P	12250	12285	11905	KA 3.5	3.5	* 4D?
P	12285	12325	11906	KA 4.0	4.0	4C
P	12325	12380	11907	KA 5.5	5.5	4D
P	12380	12425	11908	KA 4.5	4.5	4D

* No core left due to met tests.

DIAMOND DRILL RECORD

LOGGED BY S. B. REAMSBOTTOM

PROPERTY VANGORDA, GRUM JOINT VENTURE

D.D.H. No. 75-A76 PAGE 1 of 12

LATITUDE LINE GRID 7 + 96N

DEPARTURE 79 + 94W

ELEVATION 4264'

6 HIW 3085.21N (10,998.77'N) BY TROPARI

BEARING OF HOLE 24801.56E (7559.52'E) BY TROPARI

DIP OF HOLE 4305.71' (1312.38') BY TROPARI

DIP TESTS 202' -- 129° 50'; 402' -- 137° 50'; 602' -- 145° 44'; 802' -- 141° 30'; 1002' -- 153° 44'; 1272' -- 136°

202' -- -89°; 402' -- -84°; 802' -- -79° 45'; 1002' -- -83°; 1272' -- -83°

STARTED May 17, 1975 D.S.

COMPLETED May 26, 1975 D.S.

Proposed:

DEPTH Ultimate: 1336' (407.21m)

HOLE SIZE BW 0 - 62'; BQ 62 - 1336'

CLAIM No.

DIRECTION AND DISTANCE FROM NE. CLAIM POST

FOOTAGE FROM	FOOTAGE TO	DESCRIPTION	Rec. Ft.	Sample No.	Footage From	Footage To	Sample Length	Assay Pb	Assay Zn	Assay Ag	Assay Au	Assay Cu	Assay x Feet Pb	Assay x Feet Zn	Assay x Feet Ag
	18.1														
0	62	OVERBURDEN													
	20.6														
62	67.5	GREEN-GRAY, QUARTZ - CHLORITE - SERICITE PHYLLITE													
		Abundant thin (1-2 mm) white quartz carbonate veins. Massive texture. Core Angle: 60°.													
	28.7														
67.5	94.3	DARK GRAY, QUARTZ - SERICITE - GRAPHITE PHYLLITE													
		Rock well laminated. More graphitic 83-91'. Thin quartz laminae altered with micaceous laminae. Minor pyrite.	2/5		73	78									
		Core Angle: 70' = 76°, 80' = 69°, 90' = 76°. 31.3 34.4 21.4													
	32.3														
94.3	106	PALE, QUARTZ - SERICITE - PHYLLITE. MINOR CHLORITE													
		Quite massive texture as sericite rich. Thin (2-3 mm) white quartz carbonate veins in foliation. Core Angle 100' = 70°.													
		F2 folds defined by quartz carbonate layers. Recovery good.													
	40.8														
106	134	GRAY QUARTZ - SERICITE PHYLLITE													
		Good F2, F1 subvertical. Blebs of pyrite marcasite. Grades to graphite phyllite. Good F1-F2 laminae. Note F3 kinks @ 129'.	1.5/2	Mud	106	108									
		Core Angle: 110' = 76°, 120' = 72°, 130' = 75°. 33.5 36.6 39.6													

DIAMOND DRILL RECORD

LOGGED BY S. B. Reamsbottom

PROPERTY

LATITUDE BEARING OF HOLE STARTED

DEPARTURE DIP OF HOLE COMPLETED

ELEVATION DIP TESTS DEPTH Proposed: Ultimate:

D.D.H. No. 75-A76 PAGE 2 of 12

CLAIM No.

N

DIRECTION AND DISTANCE FROM NE. CLAIM POST

FOOTAGE FROM	FOOTAGE TO	DESCRIPTION	Rec. Ft.	Sample No.	Footage From	Footage To	Sample Length	Assay Pb	Assay Zn	Assay Ag	Assay Au	Assay Cu	Assay x Feet Pb	Assay x Feet Zn	Assay x Feet Ag
40.8 134	50.6 166	BLACK STRIPED CONTORED GRAPHITE-PHYLLITE													
		Again good F1-F2 relationships. F1 subvertical to F2. Many small-scale F2 folds. Blebs of pyrite. Veins with crystalline calcium carbonate.		Excellent Recovery											
		Core Angle: 140' = 75°, 150' = 67°, 160' = 63°, F2 folds. 42.7 45.7 48.7													
166	111.7 366.5	DARK GRAY, STRIPED QUARTZ - SERICITE PHYLLITE. MINOR GRAPHITE													
		Faint greenish tinge where chlorite rich except 300-350'. Same structure features as above - good F1-F2 etc.	0.5/2	Wash Out	245	247									
		Quartz veins at 179', 181', 185' and 204-206'. Creamy carbaonate in these. Blebs of pyrite, marcasite throughout. Many F2 folds	1/4		258	262									
		240-260'. F3, F2 lineations sub-parallel. Good recovery. Core Angle: 170' = 70 , F2 folds. F1 subvertical. 180' = 56°,	3.8/10		286	296									
		200' = 72° good F2 folds, 210' = 85°, 210' = 67°, 220' = 76°, 230' = 60°, 240' = mud, 250' = 72°, 280' = 60°, 270' = 67°, 280'	3.2/10		296	306									
		= 57°, 300' = 67°, 320' = 76°, 330' = 85°, F1 subvertical, 340' = 78°, 350' = 72°, 360' = 75°.	2/6		309	315		Recovery Poor.							
		Note: 328' -- F2-F3 fold axis plus lineations perpendicular.	4/6		320	326		Rock broken, gouged.							
			2.9/6		338	343									
			0.5/3.0		344	347.6									
366.5	112.6 369.5	BLACK, CONTORTED QUARTZ - GRAPHITE PHYLLITE													
		Minor blebs of pyrite.													

DIAMOND DRILL RECORD

LOGGED BY S. B. Reamsbottom

PROPERTY

LATITUDE | BEARING OF HOLE | STARTED

DEPARTURE | DIP OF HOLE | COMPLETED

ELEVATION | DIP TESTS | DEPTH Proposed: Ultimate:

D.D.H. No. 75-A76 PAGE 3 of 12

CLAIM No.

N

DIRECTION AND DISTANCE FROM NE. CLAIM POST

FOOTAGE FROM	FOOTAGE TO	DESCRIPTION	Rec. Ft.	Sample No.	Footage From	Footage To	Sample Length	Assay Pb	Assay Zn	Assay Ag	Assay Au	Assay Cu	Assay x Feet Pb	Assay x Feet Zn	Assay x Feet Ag
112.6	116.0														
369.5	380.6	SULPHIDE ZONE: MARIPOSITE PHYLLITE GRADES TO QUARTZITIC													
		SERICITE PHYLLITE WITH RED SPHALERITE, MINOR PYRITE, GALENA. Quartzitic phylllite parted by mariposite phyllite. Brecciated	3	1582	371.0	374.0	3.0	2.10	4.44	.59					
		last few feet. Note late tension gashes filled with pyrite, sphalerite.	1.5/45		374.0	378.5	—								
		No. 1582 -- quartz rich sericite phyllite (almost quartzite) - 8% sulphide, 4-5% lead-zinc	2	1583	378.5	380.5	2.0	1.50	2.46	.68					
		No. 1583 -- quartz rich sericite phyllite, brecciated, infilled carbonate, 3-4.5% sulphide, 2% lead-zinc	"												
		Core Angle: 370' = 70°.													
380.6	121.3 398	DARK GRAY MODERATELY GRAPHITIC PHYLLITE													
		Poor recovery, rock broken. Core Angle: 380' = 65°, 390' = 80°.	1.2/4.5		380.5	385									
			1.3/4.5		385	389.5									
			2.7/4.5		389.5	394									
			0.4/4		394	398									
398	132.4 434.5	PALE GREEN-GRAY QUARTZ - SERICITE PHYLLITE WITH LOCAL GREEN CHLORITE			Good Recovery										
		Creamy colour due to buff-cream quartz carbonate veins and laminae. Quartz-chlorite veins. Quartz laminae (2-3 mm) define F1. Rock more chloritic from 415 to end of section.													
		Core Angle: 400' = 75°, 410' = 75°, 420' = 70°/F2 folds; 430' = 82°/F2 folds.													

DIAMOND DRILL RECORD

LOGGED BY S. B. Reamsbottom

PROPERTY

LATITUDE BEARING OF HOLE STARTED

DEPARTURE DIP OF HOLE COMPLETED

ELEVATION DIP TESTS DEPTH Proposed: Ultimate:

D.D.H. No. 75-A76 PAGE 4 of 12

CLAIM No.

N

DIRECTION AND DISTANCE FROM NE. CLAIM POST

FOOTAGE FROM	FOOTAGE TO	DESCRIPTION	Rec. Ft.	Sample No.	Footage From	Footage To	Sample Length	Assay Pb	Assay Zn	Assay Ag	Assay Au	Assay Cu	Assay x Feet Pb	Assay x Feet Zn	Assay x Feet Ag
132.4 434.5	135.6 445	DARK GRAY QUARTZ - SERICITE PHYLLITE -- STRIPED, CRENULATED													
		Many F2, F3 folds. Note late kink, box-type F3, deform F2 folds and slip surfaces.		Recovery Good.											
		Core Angle: 440' = 64°.													
445	131.5 457.8	BLACK STRIPED QUARTZ - GRAPHITE PHYLLITE													
		Essentially same rock as above with more graphite. Same structural features. Minor pyrite. Rocks muddy from 444-447'.		Good Recovery.											
		Core Angle: 76° @ 445'.													
457.8	149.3 489.9	SULPHIDE ZONE													
		Upper 8-10 feet of more massive banded pyrite sulphide, red sphalerite, pyrrhotite in first few feet. Grades to striped	3.2	1584	457.8	461	3.2	6.70	10.65	1.82			21.44	34.08	5.82
		mineralized quartz-graphite phyllite with sulphides concentrated	4.3	1585	461	466.2	5.2	4.65	7.20	1.94			24.18	37.44	10.09
		mainly in F2 laminae. Thin green mariposite-sericite-carbonate													
		phyllite partings. Within phyllite grade varies 2-3% lead-zinc	4.8	1586	466.2	471	4.8	3.75	5.28	1.53			18.00	25.344	7.344
		to 8% lead-zinc. Note, vertical post mineralized small-scale faults.	1.8		471	472.8	—	Mariposite phyllite							
		No. 1584 -- M.S. - pyrite, red sphalerite, quartz-eyes, black magnetite, 75% sulphide, 10-15% lead-zinc	5.8	1587	478.8	478.6	5.8	2.23	3.84	.88			12.93	22.27	5.10
		No. 1585 -- M.S. -- banded: pyrite, sphalerite, minor pyrrhotite Locally thin brecciated zones. 70% sulphide, 15-20% lead-zinc	4	1588	478.6	482.6	4.0	2.63	3.48	.82			10.52	13.92	3.28
		No. 1586 -- Mineralized, striped quartz-graphite phyllite, 15-20% sulphide, 8% lead-zinc, blebs of galena	7.3	1589	482.6	489.9	7.3	1.90	1.68	.71					
		No. 1587 -- Mineralized striped quartz-graphite phyllite, 10-15% sulphide, 6-8% lead-zinc													
		No. 1588 -- Mineralized striped quartz-graphite phyllite, 10-15% sulphide, 8% lead-zinc		Wt. Av	457.8	471.0	13.2	4.82	7.34	1.76	(60.4 oz/ton)		63.62	96.864	23.256

DIAMOND DRILL RECORD

LOGGED BY S. B. Reamsbottom

PROPERTY

LATITUDE | BEARING OF HOLE | STARTED

DEPARTURE | DIP OF HOLE | COMPLETED

ELEVATION | DIP TESTS | DEPTH Proposed: Ultimate:

D.D.H. No. 75-A76 PAGE 5 of 12

CLAIM No.

N

DIRECTION AND DISTANCE FROM NE. CLAIM POST

FOOTAGE FROM	FOOTAGE TO	DESCRIPTION	Rec. Ft.	Sample No.	Sample Footage From	Sample Footage To	Sample Length	Assay Pb	Assay Zn	Assay Ag	Assay Au	Assay Cu	Assay x Feet Pb	Assay x Feet Zn	Assay x Feet Ag
											Weighted Average				
		No. 1589 -- quartz-graphite phyllite - 5% sulphide, 2-3% lead-zinc. Core Angle: 60° @ 480'.			472.8	482.6	9.8	2.39	3.69	.86	(2.93)		23.45	36.19	8.38
149.3	154.8														
489.9	508	ZONE OF CREAMY-WHITE QUARTZ - SERICITE - MARIPOSITE PHYLLITE WITH PARTINGS OF BLACK QUARTZ - GRAPHITE PHYLLITE Pale phyllites altered, minor green mariposite. Good F2 folds. Minor pyrite, red sphalerite in F2 planes in graphite phyllite. Core Angle: 490' = 75-85°, vertical F1, folded by F2, 500' = 80°. F1 subvertical.													
508	170.9 561	BLACK, STRIPED QUARTZ - GRAPHITE PHYLLITE Many F2. Contorted. Slip planes also folded. Blebs of pyrite and pyrrhotite, pyrite mantles pyrrhotite. Rock quartz veined, broken from 508-514'. Core Angle: 510' = 75°, 520' = 75°, F2 folds, 530' = 75°, 540' = 70°, 550' = 75°, 560' = 72°, F2 folds.		Recovery Good.											
561	181.2 594.5	GRAY QUARTZ - SERICITE PHYLLITE Clean. F1 closely spaced, dominant. F1 subvertical. Minor pyrite-pyrrhotite. Very phyllitic, few quartz laminae. Chlorite concentrated locally in quartz veins. Core Angle: 570' = 75°, 580' = 82°, 590' = 85°.		Recovery Good.											

DIAMOND DRILL RECORD

LOGGED BY S. B. Reamsbottom

PROPERTY

LATITUDE | BEARING OF HOLE | STARTED

DEPARTURE | DIP OF HOLE | COMPLETED

ELEVATION | DIP TESTS | DEPTH Proposed: Ultimate:

D.D.H. No. 75-A76 PAGE 6 of 12

CLAIM No.

NN — DIRECTION AND DISTANCE FROM NE. CLAIM POST

FOOTAGE FROM	FOOTAGE TO	DESCRIPTION	Rec. Ft.	Sample No.	Footage From	Footage To	Sample Length	Assay Pb	Assay Zn	Assay Ag	Assay Au	Assay Cu	Assay x Feet Pb	Assay x Feet Zn	Assay x Feet Ag
181.2	183.6														
594.5	602.5	BLACK STRIPED QUARTZ - GRAPHITE PHYLLITE													
		Good F2 folds defined by alternating quartz-graphite laminae. Note, concentration of red sphalerite in foliation. Minor		Excellent Recovery.											
		pyrite-pyrrhotite. Note, rehealed brecciated graphitic phyllite @ 599'. Healed by quartz-feldspar veins with minor pyrite.													
		Core Angle: 70° @ 600'.													
	251.2														
602.5	824.2	GRAY QUARTZ - SERICITE PHYLLITE													
		Same as unit above (561-594.5') Minor pyrite blebs. Core Angle: 610' = 74°, 620' = 74°, 630' = 66°, 640' = 60°,		Excellent Recovery											
		660' = 80°, 670' = 67°. Note: quartz veins (1-2") at 634-665'. In this zone phyllite													
		sericite rich. Also has minor chlorite. Pyrrhotite blebs in quartz veins - 657'.													
		Unit becomes broken at 698-716'. Note thick monotenous section. Minor chlorite 670' on. Rock bleached last 3 feet to sulphide.	1.5/6		698	704		Tube failed to lock.							
		Core Angle: 680' = 72°, 690' = 70°, 700' = 75°, 710' = 65°,	1.4/2		704	706									
		720' = 80°, local F2 fold noses, 730' = 87°, 740' = 84°, 750' =													
		76°, 760' = 82°, 770' = 78°, 780' = 72°, 790' = 72°, 800' = 75°, 810' = 70°, 820' = 65°. Rock muddy at 810-811'.	1/2		706	708									
	252.8														
824.2	829.5	SULPHIDE ZONE													
		Massive banded red sphalerite-pyrite-galena with thin (0.5') partings of quartz-sericite phyllite. Minor pyrrhotite. Quartz-	5.3	1590	824.2	829.5	5.3	9.34	13.23	4.12					
		barite (?) sericite gangue. 60-70% sulphide, 20% lead-zinc. Core Angle: 79° @ 825'.													

DIAMOND DRILL RECORD

LOGGED BY S. B. Reamsbottom

PROPERTY

LATITUDE | BEARING OF HOLE | STARTED

DEPARTURE | DIP OF HOLE | COMPLETED

ELEVATION | DIP TESTS | DEPTH Proposed: Ultimate:

D.D.H. No. 75-A76 PAGE 7 of 12

CLAIM No.

N — DIRECTION AND DISTANCE FROM NE. CLAIM POST

FOOTAGE FROM	FOOTAGE TO	DESCRIPTION	Rec. Ft.	Sample No.	Footage From	Footage To	Sample Length	Assay Pb	Assay Zn	Assay Ag	Assay Au	Assay Cu	Assay x Feet Pb	Assay x Feet Zn	Assay x Feet Ag
252.8 829.5	251.7 852	GRAY QUARTZ - SERICITE PHYLLITE													
		Slightly bleached 1 foot next sulphide. F2 foliation dominant ; minor pyrite-pyrrhotite.													
		Core Angle: 830' = 89°, 840' = 78°, 850' = 74°.													
852	276.7 908	DARK GRAY-BLACK STRIPED QUARTZ - GRAPHITIC PHYLLITE													
		1-2% sulphide at 868-871'. Fine grained red sphalerite, pyrite, galena and minor pyrrhotite. F2 folds well formed. Minor													
		sphalerite-pyrite-galena @ ~~889—889.7~~	~~0.7~~		889	889.7		6-8 lead-zinc estimate							
		Core Angle: 860' = 79°, 870' = 80° F2 fold noses, good F2 slip.													
		Better zone of sulphide 900.3-906.3'.													
		No. 1591 -- weak mineralized graphite phyllite - 6% sulphide, 3-4% lead-zinc	6	1591	900.3	906.3	6.0	2.45	5.52	1.32					
		Core Angle: 880' = 72°, F2 folds, 890' = 80°, 900' = 74°, 910' = 79°.													
908	280.8 921.3	GRAY QUARTZ - SERICITE PHYLLITE													
		Core Angle: 920' = 61°.													
921.3	287.4 943	SULPHIDE ZONE													
		Mainly mineralized quartz-graphite phyllites with partings of slightly bleached gray quartz-sericite phyllite. Within	5.0	1592	921.3	926.3	5.0	2.30	3.18	1.03					
		sulphide sections content varies 5-50%. Mainly red sphalerite pyrite - galena (fine-grained)	~~7.1~~ 2.9	1593	926.3 933.4	933.4 936.3	2.9	6.94	~~7.68~~	2.68			20.126	22.272	7.772

DIAMOND DRILL RECORD

LOGGED BY S. B. Reamsbottom

PROPERTY

LATITUDE BEARING OF HOLE STARTED

DEPARTURE DIP OF HOLE COMPLETED

ELEVATION DIP TESTS DEPTH Proposed: Ultimate:

D.D.H. No. 75-A76 PAGE 8 of 12

CLAIM No.

N

DIRECTION AND DISTANCE FROM NE. CLAIM POST

FOOTAGE FROM	FOOTAGE TO	DESCRIPTION	Rec. Ft.	Sample No.	Footage From	Footage To	Sample Length	Assay Pb	Assay Zn	Assay Ag	Assay Au	Assay Cu	Assay x Feet Pb	Assay x Feet Zn	Assay x Feet Ag
								(0.2)	(0.3)	(0.03)	trace		.28	.42	.042
		No. 1592 -- Mineralized striped quartz-graphite phyllite, 5-6% sulphide, 3% lead-zinc			936.3	937.7		0.5% lead-zinc estimate							
		No. 1593 -- band sulphide in phyllite gangue - 50-60% sulphide, 10% lead-zinc	5.3	1594	937.7	943	5.3	5.18	4.92	1.85			27.454	26.076	9.805
		No. 1594 -- 40% sulphide, pyrite, sphalerite, galena, minor chalcopyrite, 10% lead-zinc		Wt. Av.	933.4	943.0	9.6	4.99	5.08	1.84	(629)		47.860	48.768	17.619
287.4	292.8														
943	960.7	BLEACHED WHITE QUARTZ - SERICITE PHYLLITE													
		With abundant quartz veins (1-2') Minor pyrite in foliation.	17.7		943.0	960.7	—								
		Core Angle: 940' = 75°, 950' = 82°, 960' = 70°.													
	293.4														
960.7	963.2	MASSIVE BANDED PYRITIC SULPHIDE													
		Good F2 folds. 70-90% sulphide; pyrite, red sphalerite, galena. 20% lead-zinc.	2.5	1595	960.7	963.2	2.5	9.45	14.36	3.38					
	325.5														
963.2	1068	GRAY QUARTZ - SERICITE PHYLLITE													
		With thin (0.5') bands of cream quartz-sericite phyllite.													
		Quartz veins with minor chlorite. Blebs, stringers of pyrite.													
		Core Angle: 970' = 45°, 980' = 62°, 990' = 83°, 1000' = 83°, 1010' = 76°, 1020' = 72°, 1030' = 76°, many F2 folds, 1040' = 80°, 1050' = 71°, 1060' = 75°.													
		Note, bleached quartz-sericite phyllite (1059-1061.5')													

DIAMOND DRILL RECORD

LOGGED BY S. B. Reamsbottom

PROPERTY

LATITUDE BEARING OF HOLE STARTED

DEPARTURE DIP OF HOLE COMPLETED

ELEVATION DIP TESTS DEPTH Proposed: Ultimate:

D.D.H. No. 75-A76 PAGE 9 of 12

CLAIM No.

N

DIRECTION AND DISTANCE FROM NE. CLAIM POST

FOOTAGE FROM	FOOTAGE TO	DESCRIPTION	Rec. Ft.	Sample No.	Footage From	Footage To	Sample Length	Assay Pb	Assay Zn	Assay Ag	Assay Au	Assay Cu	Assay x Feet Pb	Assay x Feet Zn	Assay x Feet Ag
325.5 1068	331.6 1088	MAINLY PALE GREEN QUARTZ - CARBONATE - SERICITE PHYLLITE WITH PARTING OF BLACK STRIPED MINERALIZED GRAPHITE PHYLLITE Good F2 folds in graphite phyllite. Green mariposite in first 1 foot of section. Rock is soft, talcy. CC filled mini-fault breccia zones.	6.5/ 6.5		1070.5	1077		0.5-1% lead-zinc estimate 1-3% pyrite							
1088	331.9 1115.2	DARK GRAY STRIPED GRAPHITIC PHYLLITE. MINERALIZED. Thin quartz laminae alternate with black graphitic laminae. 3-4% sulphide - mainly pyrite concentrated in quartz lamiae... F1 laminae. Pyrite has bleby texture.			1091.0	1092.7		Estimate 0.5% lead-zinc							
		No. 1596 -- weak mineralized graphite phyllite. 0.5-1% lead-zinc of above phyllite. Gashes with blebs of chalcopyrite	3	1596	1105.4	1108.4	3.0	.10	.10	.03					
		No. 1597 -- massive sulphide 70-80% sulphide, 20% lead-zinc	1.7	1597	1108.4	1110.1	1.7	6.44	11.65	2.00					
		No. 1598 -- mineralized graphite phyllite - 3% sulphide, 0.5%-1% lead-zinc	3	1598	1110.1	1113.1	3.0	.02	.06	.03					
		Note blebs of pyrite-pyrrhotite at 1114-1115'.	1.9 7.5	— 1599	1113.1 1121.0	1121.0 1128.5	— 7.5	2.35	3.48	1.03					
1115.2	343.1 1128.5	SULPHIDE ZONE WITH GRAY PHYLLITE AND GREEN QUARTZ - CHLORITE - SERICITE PHYLLITES Thin banded sulphides in zone with late quartz veins and soft sheared quartz-sericite-chlorite phyllite. Note healed mini fault breccia adjacent to first band of massive sulphide. F2 fold nose in banded sulphide at 1125.5'.													

DIAMOND DRILL RECORD

LOGGED BY S. B. Reamsbottom

PROPERTY

LATITUDE BEARING OF HOLE STARTED

DEPARTURE DIP OF HOLE COMPLETED

ELEVATION DIP TESTS DEPTH Proposed: Ultimate:

D.D.H. No. 75-A76 PAGE 10 of 12

CLAIM No.

N

DIRECTION AND DISTANCE FROM NE. CLAIM POST

FOOTAGE FROM	FOOTAGE TO	DESCRIPTION	Rec. Ft.	Sample No.	Sample Footage From	Sample Footage To	Sample Length	Assay Pb	Assay Zn	Assay Ag	Assay Au	Assay Cu	Assay x Feet Pb	Assay x Feet Zn	Assay x Feet Ag
		No. 1599 -- bands of massive banded sulphide (0.5-2') in quartz vein altered gray, and green quartz-sericite-chlorite phyllites: pyrite, sphalerite, galena. Some c. g. crystals. Sulphide bands 10+, average 4-6% lead-zinc in section possibly.													
		Core Angle: 1090' = 77°, F2 folds; 1100' = 85°, 1110' = 73°, 1020' = 76°, 1130' = 86°.													
343.9 1128.5	348.1 1142.2	GRAY QUARTZ - SERICITE PHYLLITE													
		With buff thin (1mm) carbonate stringers. Minor pyrite. Core Angle: 1130' = 55°, 1140' = 60°.													
1142.2	351.4 1153	PALE WHITE BLEACHED QUARTZ - SERICITE PHYLLITE													
		Band sulphide 1145-1146' - pyrite, pyrrhotite, sphalerite, chalcopyrite in gashes. 20% sulphide, 11% lead-zinc. Core Angle: 1150 = 83°.			1144.5	1146	1.5	11% lead-zinc estimate							
1153	357.5 1173	GRAY QUARTZ - SERICITE PHYLLITE													
		Quartz veins with buff carbonate. Small-scale fractures rehealed Core Angle; 1160' = 60°, 1170' = 60°.													
1173	364.8 1197	PALE BLEACHED QUARTZ - SERICITE - CHLORITE PHYLLITE													
		Stringers of pyrite in fracture network. Greenish where more chlorite present. Blebs of sphalerite @ 1181'.													

DIAMOND DRILL RECORD

LOGGED BY S. B. Reamsbottom

PROPERTY

LATITUDE | BEARING OF HOLE | STARTED

DEPARTURE | DIP OF HOLE | COMPLETED

ELEVATION | DIP TESTS | DEPTH Proposed: Ultimate:

D.D.H. No. 75-A76 PAGE 11 of 12

CLAIM No.

N — DIRECTION AND DISTANCE FROM NE. CLAIM POST

FOOTAGE FROM	FOOTAGE TO	DESCRIPTION	Rec. Ft.	Sample No.	Sample Footage From	Sample Footage To	Sample Length	Assay Pb	Assay Zn	Assay Ag	Assay Au	Assay Cu	Assay x Feet Pb	Assay x Feet Zn	Assay x Feet Ag
		Core Angle: 1180' = 67°, 1190' = 71°.													
364.8 1197	366.5 1202.3	SULPHIDE ZONE													
		Breccia, massive sulphide with parting of bleached quartz-sericite phyllite at 1198-1201'. Sulphide: 50-70% pyrite, 15-20% lead-zinc. Average 10% over section. Core Angle: 1201' = 72°. Note barite, gypsum in fractures.	5.0	1600	1197	1202.3	5.3	4.35	4.44	1.53					
		-													
1202.3	367.8 1206.7	BLEACHED WHITE QUARTZ - SERICITE PHYLLITE WITH 1.5 FEET OF BLACK GRAPHITE PHYLLITE	4.4		1202.3	1206.7									
1206.7	378.1 1242.5	MASSIVE BANDED PYRITE SULPHIDE	5.3	1901	1206.7	1212	5.3	3.15	3.06	1.18					
		More quartz feldspar veins from 1220' onwards. 50-90% sulphide: pyrite, red sphalerite, galena, minor magnetite, pyrrhotite and chalcopyrite. Grade varies 6-15%. possible average 8-10%.	4.0	1902		1216	4.0	1.00	0.31	0.35					
			5.0	1903		1221	5.0	4.73	3.60	1.41			23.65	18.00	7.05
		Note subvertical open-space fractures infilled with white barite rosettes.	4.0	1904		1225	4.0	1.60	0.22	0.29			6.40	0.88	1.16
		No. 1901 -- M.S. 80% sulphide, 1-2% magnetite, 10-12% lead-zinc													
		No. 1902 -- massive brecciated pyrite, 70% sulphide, 2-3% lead-zinc	3.5	1905		1228.5	3.5	5.37	4.20	1.41			18.795	14.70	4.935
		No. 1903 -- M.S. 80% sulphide, 15-20% lead-zinc	4.0	1906		1232.5	4.0	0.59	0.27	0.32			2.36	1.08	1.28
		No. 1904 -- M.S. - pyrite with C.G. quartz-feldspar. Low lead-zinc possibly 3%	5.5	1907		1238	5.5	5.03	3.66	1.47			27.665	20.13	8.085
		No. 1905 -- Banded sulphide - 50-60% sulphide: 8% lead-zinc, Note magnetite, bands of white barite, tension gashes with chalcopyrite	4.5	1908		1242.5	4.5	4.05	3.48	1.15			18.225	15.39	5.175

DIAMOND DRILL RECORD

LOGGED BY S. B. Reamsbottom

PROPERTY

D.D.H. No. 75-A76 PAGE 12 of 12

LATITUDE BEARING OF HOLE STARTED

DEPARTURE DIP OF HOLE COMPLETED

ELEVATION DIP TESTS DEPTH Proposed: Ultimate:

CLAIM No.

N — DIRECTION AND DISTANCE FROM NE. CLAIM POST

FOOTAGE FROM	FOOTAGE TO	DESCRIPTION	Rec. Ft.	Sample No.	Footage From	Footage To	Sample Length	Assay Pb	Assay Zn	Assay Ag	Assay Au	Assay Cu	Assay x Feet Pb	Assay x Feet Zn	Assay x Feet Ag
		No. 1906 -- banded sulphide in quartz-sericite gangue. 50%		Wt. Av.	1216.0	1242.5	26.5	3.66	2.65	1.04	(.358)		97.120	70.18	27.685
		sulphide: pyrite, minor sphalerite, galena, pyrrhotite, magnetite, chalcopyrite in gashes. Magnetite		Wt. Av.	1216.0	1228.5	12.5	3.91	2.69	1.05	(.361)		48.845	33.58	13.145
		crystals. 3-5% lead-zinc.													
		No. 1907 -- as above, banding more obvious as darker pyrrhotite		Wt. Av.	1232.5	1242.5	10.0	4.59	3.35	1.33	(.455)		45.915	33.52	13.260
		, magnetite, sphalerite. 60-70% sulphide; 6-9% lead-zinc. Veins of white barite. 1-2% magnetite.													
		No. 1908 -- as above. 3% magnetite. 6-8% lead-zinc.													
		Core Angle: 1210' = 75°, 1220' = 60°, 1230' = 50°, 1240' = 67°.													
378.7	404.2														
1242.4	1326	PALE WHITE BLEACHED QUARTZ - SERICITE PHYLLITE													
		With buff carbonate in foliation. Abundant stringers, blebs of													
		pyrite and pyrrhotite. Rock broken locally. Note biotite at													
		1282-1287'. Pyrrhotite @ 1279-1307'.	6/10		1264	1274									
		Core Angle: 1250' = 70°, 1260' = 79°, F2 folds, 1270' = 47°,													
		1280' = 70°, 1290' = 67°, 1300 = 65°, 1310' = 75°, 1320' = 66°.													
	407.2														
1326	1336	GRAY QUARTZ - SERICITE PHYLLITE			Good Recovery										
		Note network of quartz-carbonate veins. Minor pyrite.													
		Core Angle: 1330' = 75°. Rock broken but recovered (cored).													
	1336	END OF HOLE													
		REMARKS: 1. Cemented hole from 1336' upwards (9 bags of cement)													

75 A079

DRILL HOLE : FAGA079

NORTHING : 905,251.8

EASTING : 592,283.2

ELEVATION : 1,301.6

TOTAL DEPTH : 419.1

SECTION : W 80

R.F.E. : S2

RFE DIRECTION: 230

PLUNGE ANGLE : 11

PLUNGE DIRECT: 312

DHD CALC: 1

SS CALC: 0

DETAIL RECORD COUNTS:

NOS CRE-SAMPLES: 31

NOS DOWN-H-SURVEYS: 6

NOS DOWN-H-LITHOLOGY: 75

NOS DOWN-H-STRUCTURE: 102

NOS DOWN-H-FAULTS: 23

NOS DOWN-H-SPLINES: 6

NOS COMPOSITES: 0

DDH: FAGA079 UTM-N: 905,251.8 UTM-E: 592,283.2 UTM-ELEV: 1,301.6 TOTAL DEPTH: 419.1 SECTION: W 80
RFE: S2 RFE DIR: 230 PLUNGE ANGLES: 11 312 DHD CALC: 1 SS CALC: 0

DEPTHS FROM	DEPTHS TO	SAMPLE NO.	INT.	REC.	ROCK UNIT	ASSAYS S.G. PULP	CU %	PB %	ZN %	AG(AA) G/MT	AG(FA) G/MT	AU(FA) G/MT	PO %	PY %	TOT FE	BAO %	HG %	MN %	AS %	BA %	S.G. W.R.
61.7	63.7	08189	2.0	2.0	4A14	2.89	.01	1.53	3.90	36.00		.55		1	1						
63.7	65.7	08190	2.0	2.0	4A14	2.98	.03	2.77	4.30	42.00		.75	1	20	21						
74.7	76.3	08191	1.6	1.3	4DO	2.89	.02	2.01	3.10	38.00		.69	2	2	4						
78.7	80.0	08192	1.3	1.3	4A14	2.95	.02	1.85	3.90	36.00		.69	1	2	4						
80.8	82.1	08193	1.3	1.3	4CO	2.94	.02	1.34	3.30	29.00		.55	2	1	4						
82.1	83.5	08194	1.4	1.3	4A4	3.06	.03	1.85	4.10	35.00		.69	2	4	7						
85.3	86.3	08195	1.0	.8	4A4	3.14	.04	2.26	5.10	42.00		.48	3	7	10						
89.3	90.8	91046	1.5	1.5	4A4			3.30	5.46		45.30										
90.8	92.5	91047	1.7	1.7	4A4			2.93	5.40		37.40										
92.5	96.0	91048	3.5	1.4	4A4			4.13	2.82		44.20										
96.0	97.4	91049	1.4	1.3	4AO			1.58	1.94		25.40										
97.4	99.4	91050	2.0	2.0	4AO			1.35	2.46		23.30										
99.4	100.9	91051	1.5	1.5	4A4			2.50	4.26		35.30										
100.9	102.4	91052	1.5	.0	4AO			1.48	3.00		21.30										
102.4	104.5	91053	2.1	1.8	4A4			1.90	4.14		29.10										
106.8	109.7	91054	2.9	2.6	4AO			.93	1.84		15.10										
114.1	115.7	91055	1.6	1.5	4AO			1.19	3.60		20.20										
115.7	116.9	91056	1.2	1.2	4A4			4.50	5.28		60.30										
118.1	119.5	91057	1.4	1.3	4DO			2.78	6.48		49.40										
119.5	121.7	91058	2.2	2.2	4DE			6.17	10.92		100.80										
286.5	287.6	91059	1.1	1.0	4AC			.85	1.74		12.00										
287.6	289.4	91060	1.8	1.8	4AD			2.23	4.26		39.40										
289.8	291.8	91061	2.0	1.9	4A4			2.28	3.60		36.30										
291.8	292.4	91062	.6	.6	4AO			2.33	2.46		28.10										
344.6	346.3	91063	1.7	1.6	4E48			5.84	5.40	61.40											
346.3	347.8	08196	1.5	1.5	4G48	4.60	.12	8.20	7.30	106.00		1.92	1	20	22						
347.8	349.3	08197	1.5	1.5	4G48	4.31	.14	5.13	5.40	68.00	64.00	1.30	3	19	22						
349.3	350.5	08198	1.2	1.2	4G48	4.35	.08	5.95	7.30	75.00		1.37	2	22	24						
350.5	352.0	08199	1.5	1.5	4G48	4.63	.06	4.20	6.40	54.00		1.30	2	22	24						
352.0	353.6	08200	1.6	1.5	4G48	4.47	.08	4.00	6.10	58.00		1.37	2	17	19						
353.6	355.5	08081	1.9	1.9	4G48	4.34	.07	4.00	6.00	58.00		.69	5	10	16						
WEIGHTED AVERAGE																					
61.7	65.7		4.0	4.0		2.93	.02	2.15	4.10	39.00		.65	1	10	11						
74.7	76.3		1.6	1.3		2.89	.02	2.01	3.10	38.00		.69	2	2	4						
78.7	80.0		1.3	1.3		2.95	.02	1.85	3.90	36.00		.69	1	2	4						
80.8	83.5		2.7	2.6		3.00	.02	1.60	3.71	32.11		.62	2	3	5						
85.3	86.3		1.0	.8		3.14	.04	2.26	5.10	42.00		.48	3	7	10						
89.3	104.5		15.2	11.2				2.58	3.58		33.84										

DDH: FAGA079 UTM-N: 905,251.8 UTM-E: 592,283.2 UTM-ELEV: 1,301.6 TOTAL DEPTH: 419.1 SECTION: W 80
RFE: S2 RFE DIR: 230 PLUNGE ANGLES: 11 312 DHD CALC: 1 SS CALC: 0

DEPTHS FROM	DEPTHS TO	SAMPLE NO.	INT.	REC.	ROCK UNIT	ASSAYS S.G. PULP	CU %	PB %	ZN %	AG(AA) G/MT	AG(FA) G/MT	AU(FA) G/MT	PO %	PY %	TOT FE	BAO %	HG %	MN %	AS %	BA %	S.G. W.R.
106.8	109.7		2.9	2.6				.93	1.84		15.10										
114.1	116.9		2.8	2.7				2.60	4.32		37.38										
118.1	121.7		3.6	3.5				4.85	9.19		80.81										
286.5	289.4		2.9	2.8				1.70	3.30		29.00										
289.8	292.4		2.6	2.5				2.29	3.33		34.40										
344.6	355.5		10.9	10.7		3.75	.07	5.26	6.21	67.83	8.80	1.09	2	15	18						

DDH: FAGA079 UTM-N: 905,251.8 UTM-E: 592,283.2 UTM-ELEV: 1,301.6 TOTAL DEPTH: 419.1 SECTION: W 80
RFE: S2 RFE DIR: 230 PLUNGE ANGLES: 11 312 DHD CALC: 1 SS CALC: 0

DEPTH	ZENITH	AZIMUTH
0.000	180.000	0.000
61.000	179.000	166.600
121.900	177.000	140.300
182.900	176.000	137.600
243.800	176.000	146.500
378.000	171.000	106.400

DDH: FAGA079 UTM-N: 905,251.8 UTM-E: 592,283.2 UTM-ELEV: 1,301.6 TOTAL DEPTH: 419.1 SECTION: W 80
RFE: S2 RFE DIR: 230 PLUNGE ANGLES: 11 312 DHD CALC: 1 SS CALC: 0

DEPTH	UNIT	CODE	DESC	RECOVERY	IND
11.3	0001			0.0	1
20.4	0002	5D3	(5C)	0.0	1
24.7	0003	5B8	(5D) MINOR	0.0	1
26.3	0004	5D3	(5C)	0.0	1
28.3	0005	5B8		0.0	1
32.9	0006	5D3		0.0	1
33.8	0007	5B6		0.0	1
34.3	0008	5D3		0.0	1
36.4	0009	5B8		0.0	1
61.7	0010	5D3	(5C4)	0.0	1
65.7	0011	4A14	PHYLLITIC	0.0	1
73.2	0012	5B26	(5D6) 50:50	0.0	1
74.2	0013	5B6		0.0	1
74.7	0014	5D4	(5C4)	0.0	1
76.3	0015	4D0		0.0	1
76.7	0016	5D4*	(4C5)	0.0	1
80.0	0017	4A14	->4A14 PHYLLITIC	0.0	1
80.8	0018	5D36		0.0	1
82.3	0019	4C0	->4L4	0.0	1
83.5	0020	4A4		0.0	1
84.8	0021	5C6*		0.0	1
85.2	0022	4B4		0.0	1
85.3	0023	5D6		0.0	1
86.3	0024	4A4		0.0	1
86.6	0025	5D3		0.0	1
88.8	0026	5A9		0.0	1
89.2	0027	5D4*		0.0	1
116.7	0028	4A0	&4 (4C5)(5B29)	0.0	1
118.0	0029	5D4*		0.0	1
119.5	0030	4D0	?? NO CORE	0.0	1
121.7	0031	4D4	->4E4? (5D4*) MINOR NO CORE	0.0	1
123.4	0032	5B6	&2 &9 MINOR	0.0	1
123.5	0033	5D4*		0.0	1
124.1	0034	4A4		0.0	1
140.0	0035	5B62	->5B649 AT END	0.0	1
150.7	0036	3G9	&3&* (5A0) MARKER?	0.0	1
153.4	0037	3G95	3G95 MARKER	0.0	1
186.9	0038	5D3	(5D4*)(5C4*)	0.0	1
192.0	0039	5A6	&0	0.0	1
201.9	0040	3G0	(3G3)(4L0)	0.0	1
203.6	0041	3G4		0.0	1
204.5	0042	3G0	(3G4)	0.0	1
207.3	0043	5A6		0.0	1
208.0	0044	5D6		0.0	1
208.4	0045	5A61	EXHALITE EQUIV.	0.0	1
212.1	0046	5C*4		0.0	1
216.7	0047	5A61	EXHALITE EQUIV.	0.0	1
217.8	0048	5D6		0.0	1
225.5	0049	5A13	&9 ->4A0	0.0	1
226.6	0050	5D0		0.0	1
228.1	0051	5A10	->4A0	0.0	1

DDH: FAGA079 UTM-N: 905,251.8 UTM-E: 592,283.2 UTM-ELEV: 1,301.6 TOTAL DEPTH: 419.1 SECTION: W 80
RFE: S2 RFE DIR: 230 PLUNGE ANGLES: 11 312 DHD CALC: 1 SS CALC: 0

DEPTH	UNIT	CODE	DESC	RECOVERY	IND
230.7	0052	5A10	(5D0) 50:50	0.0	1
232.7	0053	5DC		0.0	1
267.0	0054	5A61	&9 MINOR	0.0	1
267.5	0055	5D0		0.0	1
270.3	0056	5A13	&9 ->4A0	0.0	1
271.9	0057	5C4*		0.0	1
278.3	0058	5B26		0.0	1
281.2	0059	5D6	->4L0	0.0	1
286.5	0060	5B26	(4D45) MINOR NEAR TOP	0.0	1
287.6	0061	4A0	(4C5)(4D5)	0.0	1
289.4	0062	4A	(4D)? NO CORE	0.0	1
289.8	0063	5D4@		0.0	1
292.5	0064	4A4	&0 PHYLLITIC [4D5]	0.0	1
306.3	0065	3G9	(4L1) MINOR AT TOP	0.0	1
310.3	0066	3B3	BIOTITE	0.0	1
335.0	0067	5B26	(3B3) MINOR	0.0	1
344.3	0068	4L0	(5B26)	0.0	1
344.6	0069	3G9	[5B62]	0.0	1
346.3	0070	4E48	[4G8] NO CORE	0.0	1
355.5	0071	4G48		0.0	1
399.9	0072	4L0	W. BIO. & GARNET	0.0	1
413.8	0073	5B86	5	0.0	1
414.8	0074	4L0		0.0	1
419.1	0075	5B26		0.0	1

DDH: FAGA079 UTM-N: 905,251.8 UTM-E: 592,283.2 UTM-ELEV: 1,301.6 TOTAL DEPTH: 419.1 SECTION: W 80
RFE: S2 RFE DIR: 230 PLUNGE ANGLES: 11 312 DHD CALC: 1 SS CALC: 0

DDH	F DEPTH	T DEPTH	FEAT	SYMTRY	S0 ANGLE	S0 DIRECT	S1 ANGLE	S1 DIRECT	S2 ANGLE	S2 DIRECT	RFE CDE	DHDC	SDC	PROCESS
FAGA079	0.0	14.3	CS2		0	0	0	0	72	230	0	1	0	0
FAGA079	0.0	18.9	CS2		0	0	0	0	70	230	0	1	0	0
FAGA079	0.0	23.5	CS2		0	0	0	0	75	230	0	1	0	0
FAGA079	0.0	28.0	CS2		0	0	0	0	75	230	0	1	0	0
FAGA079	0.0	33.0	CS2		0	0	0	0	80	230	0	1	0	0
FAGA079	0.0	37.9	CS2		0	0	0	0	75	230	0	1	0	0
FAGA079	0.0	41.2	CS2		0	0	0	0	75	230	0	1	0	0
FAGA079	0.0	45.7	CS2		0	0	0	0	76	230	0	1	0	0
FAGA079	0.0	48.8	CS2		0	0	0	0	70	230	0	1	0	0
FAGA079	0.0	65.8	CS2		0	0	0	0	75	230	0	1	0	0
FAGA079	0.0	68.0	CS2		0	0	0	0	50	230	0	1	0	0
FAGA079	0.0	72.5	CS2		0	0	0	0	75	230	0	1	0	0
FAGA079	0.0	78.9	CS2		0	0	0	0	70	230	0	1	0	0
FAGA079	0.0	82.0	CS2		0	0	0	0	75	230	0	1	0	0
FAGA079	0.0	86.1	CS2		0	0	0	0	70	230	0	1	0	0
FAGA079	0.0	103.3	CS2		0	0	0	0	72	230	0	1	0	0
FAGA079	0.0	107.4	CS2		0	0	0	0	79	230	0	1	0	0
FAGA079	0.0	111.6	CS2		0	0	0	0	64	230	0	1	0	0
FAGA079	0.0	116.2	CS2		0	0	0	0	90	230	0	1	0	0
FAGA079	0.0	118.0	CS2		0	0	0	0	68	230	0	1	0	0
FAGA079	0.0	122.2	CS2		0	0	0	0	72	230	0	1	0	0
FAGA079	11.3	123.7	CS2	S	0	0	0	0	0	0	0	1	0	0
FAGA079	0.0	127.9	CS2		0	0	0	0	75	230	0	1	0	0
FAGA079	123.7	130.5	CS2	Z	0	0	0	0	0	0	0	1	0	0
FAGA079	0.0	132.0	CS2		0	0	0	0	75	230	0	1	0	0
FAGA079	130.5	134.6	CS2	M	0	0	0	0	0	0	0	1	0	0
FAGA079	0.0	136.6	PS2		0	0	0	0	60	230	0	1	0	0
FAGA079	134.6	136.6	PS2	P	0	0	0	0	0	0	0	1	0	0
FAGA079	0.0	141.1	CS2		0	0	0	0	86	230	0	1	0	0
FAGA079	0.0	145.7	CS2		0	0	0	0	76	230	0	1	0	0
FAGA079	0.0	150.3	CS2		0	0	0	0	80	230	0	1	0	0
FAGA079	136.6	153.4	CS2	M	0	0	0	0	0	0	0	1	0	0
FAGA079	0.0	156.4	PS2		0	0	0	0	78	230	0	1	0	0
FAGA079	0.0	160.0	PS2		0	0	0	0	73	230	0	1	0	0
FAGA079	0.0	164.6	PS2		0	0	0	0	74	230	0	1	0	0
FAGA079	0.0	169.2	PS2		0	0	0	0	70	230	0	1	0	0
FAGA079	153.4	171.0	PS2	P	0	0	0	0	0	0	0	1	0	0
FAGA079	0.0	172.8	CS2		0	0	0	0	75	230	0	1	0	0
FAGA079	0.0	177.4	CS2		0	0	0	0	77	230	0	1	0	0
FAGA079	0.0	182.0	CS2		0	0	0	0	75	230	0	1	0	0
FAGA079	0.0	186.5	CS2		0	0	0	0	70	230	0	1	0	0
FAGA079	0.0	191.1	CS2		0	0	0	0	66	230	0	1	0	0
FAGA079	0.0	195.7	CS2		0	0	0	0	64	230	0	1	0	0
FAGA079	0.0	200.3	CS2		0	0	0	0	70	230	0	1	0	0
FAGA079	0.0	204.8	CS2		0	0	0	0	70	230	0	1	0	0
FAGA079	0.0	209.7	CS2		0	0	0	0	65	230	0	1	0	0
FAGA079	0.0	214.3	CS2		0	0	0	0	80	230	0	1	0	0
FAGA079	0.0	218.2	CS2		0	0	0	0	77	230	0	1	0	0
FAGA079	0.0	222.5	CS2		0	0	0	0	72	230	0	1	0	0
FAGA079	0.0	227.1	CS2		0	0	0	0	82	230	0	1	0	0
FAGA079	0.0	231.6	CS2		0	0	0	0	76	230	0	1	0	0

DDH: FAGA079 UTM-N: 905,251.8 UTM-E: 592,283.2 UTM-ELEV: 1,301.6 TOTAL DEPTH: 419.1 SECTION: W 80
RFE: S2 RFE DIR: 230 PLUNGE ANGLES: 11 312 DHD CALC: 1 SS CALC: 0

DDH	F DEPTH	T DEPTH	FEAT	SYMTRY	S0 ANGLE	S0 DIRECT	S1 ANGLE	S1 DIRECT	S2 ANGLE	S2 DIRECT	RFE CDE	DHDC	SDC	PROCESS
FAGA079	0.0	236.5	CS2		0	0	0	0	80	230	0	1	0	0
FAGA079	171.0	239.1	CS2	S	0	0	0	0	0	0	0	1	0	0
FAGA079	0.0	242.6	CS2		0	0	0	0	70	230	0	1	0	0
FAGA079	239.1	245.7	CS2	Z	0	0	0	0	0	0	0	1	0	0
FAGA079	0.0	246.6	CS2		0	0	0	0	87	230	0	1	0	0
FAGA079	0.0	250.9	CS2		0	0	0	0	70	230	0	1	0	0
FAGA079	245.7	254.5	CS2	S	0	0	0	0	0	0	0	1	0	0
FAGA079	0.0	255.1	CS2		0	0	0	0	70	230	0	1	0	0
FAGA079	254.5	256.3	CS2	Z	0	0	0	0	0	0	0	1	0	0
FAGA079	0.0	259.7	CS2		0	0	0	0	70	230	0	1	0	0
FAGA079	0.0	264.3	CS2		0	0	0	0	67	230	0	1	0	0
FAGA079	0.0	269.7	CS2		0	0	0	0	71	230	0	1	0	0
FAGA079	256.3	270.0	CS2	S	0	0	0	0	0	0	0	1	0	0
FAGA079	0.0	274.1	CS2		0	0	0	0	61	230	0	1	0	0
FAGA079	0.0	278.6	CS2		0	0	0	0	54	230	0	1	0	0
FAGA079	0.0	283.2	CS2		0	0	0	0	64	230	0	1	0	0
FAGA079	0.0	286.5	CS2		0	0	0	0	65	230	0	1	0	0
FAGA079	270.0	287.5	CS2	Z	0	0	0	0	0	0	0	1	0	0
FAGA079	0.0	289.3	PS2		0	0	0	0	70	230	0	1	0	0
FAGA079	0.0	292.6	PS2		0	0	0	0	75	230	0	1	0	0
FAGA079	0.0	299.9	PS2		0	0	0	0	64	230	0	1	0	0
FAGA079	287.5	300.2	PS2	P	0	0	0	0	0	0	0	1	0	0
FAGA079	0.0	304.8	CS2		0	0	0	0	74	230	0	1	0	0
FAGA079	0.0	309.3	CS2		0	0	0	0	65	230	0	1	0	0
FAGA079	300.2	311.4	CS2	S	0	0	0	0	0	0	0	1	0	0
FAGA079	0.0	313.6	CS2		0	0	0	0	85	230	0	1	0	0
FAGA079	0.0	316.7	CS2		0	0	0	0	86	230	0	1	0	0
FAGA079	0.0	322.2	CS2		0	0	0	0	75	230	0	1	0	0
FAGA079	0.0	329.3	CS2		0	0	0	0	85	230	0	1	0	0
FAGA079	0.0	334.0	CS2		0	0	0	0	70	230	0	1	0	0
FAGA079	319.6	335.3	CS2	Z	0	0	0	0	0	0	0	1	0	0
FAGA079	0.0	338.9	CS2		0	0	0	0	72	230	0	1	0	0
FAGA079	0.0	344.1	CS2		0	0	0	0	70	230	0	1	0	0
FAGA079	335.3	344.4	CS2	S	0	0	0	0	0	0	0	1	0	0
FAGA079	0.0	348.9	PS2		0	0	0	0	60	230	0	1	0	0
FAGA079	0.0	353.6	PS2		0	0	0	0	65	230	0	1	0	0
FAGA079	0.0	358.1	PS2		0	0	0	0	80	230	0	1	0	0
FAGA079	0.0	363.0	PS2		0	0	0	0	76	230	0	1	0	0
FAGA079	0.0	367.0	PS2		0	0	0	0	80	230	0	1	0	0
FAGA079	0.0	371.6	PS2		0	0	0	0	70	230	0	1	0	0
FAGA079	0.0	375.2	PS2		0	0	0	0	68	230	0	1	0	0
FAGA079	0.0	379.8	PS2		0	0	0	0	66	230	0	1	0	0
FAGA079	0.0	384.7	PS2		0	0	0	0	73	230	0	1	0	0
FAGA079	0.0	389.1	PS2		0	0	0	0	75	230	0	1	0	0
FAGA079	0.0	393.7	PS2		0	0	0	0	72	230	0	1	0	0
FAGA079	0.0	399.0	PS2		0	0	0	0	73	230	0	1	0	0
FAGA079	0.0	403.6	PS2		0	0	0	0	74	230	0	1	0	0
FAGA079	0.0	408.1	PS2		0	0	0	0	80	230	0	1	0	0
FAGA079	0.0	413.0	PS2		0	0	0	0	75	230	0	1	0	0
FAGA079	0.0	418.2	PS2		0	0	0	0	76	230	0	1	0	0
FAGA079	344.4	419.1	PS2	P	0	0	0	0	0	0	0	1	0	1

CYPRUS ANVIL MINING CORPORATION

DIAMOND DRILL CORE LOG

Hole Number: 75-A079

Project: Grum Relog

Location: Vangorda Plateau

Claim: Grum

UTM Terr. Plane Co-ords.: 6905251.83 N

1979 HIW Survey 592283.24 E

Grid Co-ords.: 80W / 10N

1979 HIW Survey Elevation: 1301.55

Fabric Orientation Diagram:

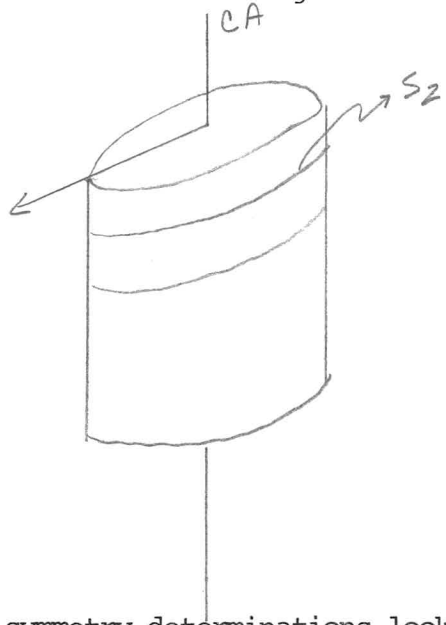

All symmetry determinations looking

NW with S_2 dipping

SW with dip azimuth 230.

Total Depth: 1375.0 ft ~~(406.62 m)~~ 419.1 m

Purpose:

Re Logged by: JSM Date(s) Logged: June 9 - June 14 1980

Drilling Contractor:

Core:	Size	From	To
	BW	0	40
	BQ	40	1375

Collar Cased and Capped:

Started: 5/27/75 Completed: 6/3/75

Cyprus Anvil Mining Corp.

Diamond Drill Core Log

DDH 75-A079

Code	Drillhole	Elevation	Northing	Easting	Comments
1	2 8	10 16	17 24	25 32	34 48
T	75-A079	1301.6	9052551.8	592283.2	FEET

Code	Drillhole	Depth	Zenith Angle	True Azimuth	Comments
1	2 8	10 14	22 26	28 32	34 56
R	75-A079	0 0	180.0	0.0	ATCOLLAR
R	75-A079	200.0	179.0	166.6	TROPARI
R	75-A079	400.0	177.0	140.3	
R	75-A079	600.0	175.0	137.6	
R	75-A079	800.0	176.0	146.5	
R	75-A079	1240.0	171.0	106.4	
R		.	.	.	
R		.	.	.	
R		.	.	.	
R		.	.	.	
R		.	.	.	
R		.	.	.	
R		.	.	.	
R		.	.	.	
R		.	.	.	
R		.	.	.	

Code	Drillhole	Comments, Errant Remarks, Snivellings and/or Lewd Suggestions
1	2 8	10 47
		some complete sampling of std zones by KA

DDH 75-A079 (2–8)

Cyprus Anvil Mining Corp.
Lithologic Log

Logged By: JSM

GAT DSJ 22 June 82

OK

check

Code	From	To	Unit	Code	Description
1	10–14	16–20	22 23	25–27	
L	0 0	37 0	1		O/B
L	37 0	67 0	2	5D3	(5C mot) strongly calcareous to 60.0'; pale green, massive w/ white cc bands; and buff ankerite bands; v. minor py, small interbeds of slightly mottled 5D; OQO @ TOI
L	67 0	80 9	3	5B8	strongly calcareous, greenish gray banded, small interbeds of 5D
L	80 9	87 0	4	5D3	as unit 2 (5C mot)
L	87 0	93 0	5	5B8	as unit 3, broken OQO 92-93'
L	93 0	108 0	6	5D3	minor biotite mariposite + py
L	108 0	111 0	7	5B8	
L	111 0	112 6	8	5D3	
L	112 6	119 5	9	5B8	
L	119 5	202 5	10	5D(3)	minor py + po blebs, carbonate content ↓ as talc ↑, white sericite devel., mottled texture 161.5-168.0 (5C)
					168.0-191.9 (Box 6) core lost
					191.9-194.0 bxiated white qtz chlorite + mottled 5D w/ dissem + blebs of sfds (po py + gal) 58.5m – 59.1
					194-198 laminated 5D6 w/ buff spots, buff-orange bands (not ankerite), some sericite
					198-202.5 mottled ~~5D6~~ 5C4 mot buff non-calc gangue w/ green chlor. mottles + wisps, green mariposite 201-202.5
L	202 5	215 6	11	4A1	v. minor graphite ⇒ 4A1 phyllitic, red sphal gal py, ~5% PbZn
L	215 6	240 0	12	5BD	50/50 interbeds of 5B26 w/ 5D6 (not dol.), qtz + carb veins w/ py
					234.5-236.0 OQO w/ fracture fillings of po + gal (+ sphal?)
L	240 0	243 3	13	5B6	73.2 74.2 gray clay gouge, non-calc
L	243 3	245 1	14	5D6	buff-orange massive, and mottled w/ mariposite (5D4 JSM) 5C4 mot
L	245 1	250 3	15	~~4B4~~	changed to 4D0 on basis of descrip and assays greenish qtz; fine red sphal, galena + py; 5-20% sfds // S_1 (?), subvertical 249-250
L	250 3	258 2	16	5D6	buff-orange massive, 5D4* locally rich in sfd bands // S_1 // S_2, (red sphal, gal + py) → 4C5 (5D4)
L	258 2	262 4	17	4A1	as unit 11, → 4B4 as unit 15 but white qtz 4A1 to 4A1 phyllitic
L	262 4	265 0	18	5D3	* ankeritic, minor sfds, py gal, blebs + laminae // banding
L	265 0	273 9	19	4C0	to 4C4, w/ 4A0 270-273 white qtz w/ sfd bands red sphal > gal > py, → 4A1 270-273 should be two units!!
L	273 9	278 3	20	5C6	mot * strongly chl. altered, mottled 5D, w 4" massive py replacing 5D (?)
L	278 5	279 5	21	4B4	

Correct to 4C0/4A0

DDH 75-A079 (2–8)

Cyprus Anvil Mining Corp.
Lithologic Log

Logged By: JSM

Code	From (10–14)	To (16–20)	Unit (22–23)	Code (25–27)	Description
4A0	2795	2800	22	5D6	w/ strong mariposite development
	2800	2830	23	4A0	4A01 ~5% sfds (red sphal, py, gal), graphite poor
	2830	2840	24	5D3	slightly calcareous
					sharp upper ctc 74° to C.A.
					sharp lower ctc 45° to C.A.
					note 2" sharply defined units @ TOI + EOI
					altered ? iron-stained ?
	2840	2912	25	5A9	sheared 11 S2 & oxidated c.h textures @ Make Believe Locally abundant py + red sphal. as fracture fillings, bxia-fill Fault
					blebs etc xcutting foliation, 10" OQO near 10-15% PbZn
					fracturefill (286-287.7)
5D4*	2912	2927	26	5D4	→ 5D4* bxia w/ blebs of mariposite
	2927	3830	27	4A0 4A4	3" 4B to 4C5 @ TOI; 293-307 completely sampled; split to 326;
					completely sampled to 331; split to 343, split
					351-360, split 374.5-383; 364-374.5 = 5B29 to 4C5 4A0
					331-337 - 4A0 337-344 = 4C5 344-360 - 4A0 360-364 - 4C5
					Locally → 4A1; unsplit intervals → 5B2 w/
					sericite; locally OQO w/ sfd fracture fills;
					Up to 7% PbZn avg ~5% py.
5D4*	3830	3872	28	5D3	5D4* none fuchsite bearing massive buff-orange. S_2 only slightly defined by sericite +
					buff mica(?), slightly calcareous; *altered 5D* 5D43
	3872	3920	29	4B4	4D8-4C5? completely sampled
					KA sample # 1928 - "mineralized white quartzitic sericite
					phyllite 10% Sfd 6-8% PbZn" 4D??
	3920	3992	30	4D4	→ 4E4? completely sampled
					KA sample # 1929 - "banded + massive sfd in qtz-sericite
					gangue 70% sfd 15-20% PbZn red-orange
					sphal, gal, py, minor cpy,"
					Thin (0.5') parting of qtz, sericite chlor. + mariposite
					@ 397.
	3992	4049	31	5B2	5B612 w/ minor ZnS; 6 noncalc, extremely fine-grained w/ sericite
	4049	4052	32	5D6	altered 5D 5D4*
	4052	4070	33	4A0	4A4 ~20% sfd <5% Zn (red sphal); 407-415 gouge & broken 4E @ TOI
	4070	4594	34	5B2	5B62 fine grained w/ sericite + dissem. sphal py + po
					becoming more normally banded 5B2 below 428
					locally graphite-rich enough to be 5A
					Last 1½' = bleached, sericite-rich w/ concentrations of
					sfds in patches (red sphal gal + py)

Gouge 407-411

407-411 ≡ massive gouge zone, no attitudes

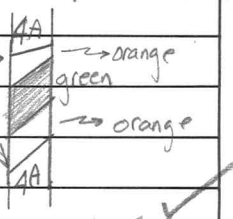

DDH 75-A079 (2–8)

Cyprus Anvil Mining Corp.
Lithologic Log

Logged By: JSM

Code	From	To	Unit	Code	Description
1	10–14	16–20	22 23	25–27	→ marker?
L	4594	4945	35	5A6	only occasional $CO_3^=$ 3G9 ± 3±* (5A0) not good as 5A
					minor sfd bleds, dissem + laminae } same
L	4945	5033	36	~~5B0~~	3G9* dol. marker slightly calcareous, chloritic top, gradational lower ctc.
L	5033	6132	37	~~5D3~~ 5C	strongly to moderately calcareous 5D (5D4*)(5C4*)
					mottled 5~~D~~C: 541.0-550, 568.0-570.0, 571.5-575.0 c.f. units 2-10
					578.0-580.0, 585.5-589.0 ↳ strong local clay alteration
					minor py usu as veinlets + fracture-fill
					552-553.5 4D1? greenish qtz + sericite w/ bands
					of py, redsphal, + galena
					locally sericite-rich
					608-609 broken recovery, sericite → 4L
					609-610 5A interbed
L	6132	6300	38	5A6	±0
L	6300	6625	39	~~5B6~~	3G0 (3G3, 4L0) 8 (chloritic) bleached (sericite) @ TOI
L	6625	6680	40	~~5D6~~	3G4 mottled 5D wkly to 663.5 then strange stuff 5D, 5B, 4L ? } same
L	6680	6710	41	~~5B6~~	8 → ~~5B62~~ 3G0 (3G4)
L	6710	6800	42	5A6	only 3ft recovery
L	6800	6823	43	5D6	~~5AG1~~
L	6823	6837	44	5A6	5AG1
L	6837	6958	45	~~5D6~~	mottled 5D 5C*4
L	6958	7110	46	~~5A6~~	5AG1
L	7110	7147	47	5D6	
L	7147	7398	48	~~5A3~~	5A13±9 ⇒ 4A0 w/ OQD + interbeds of 5D @ TOI
L	7398	7434	49	5D3	5D0
L	7434	7484	50	~~5A3~~	5A10 ⇒ 4A0
L	7484	7570	51	5DA	50/50 interbeds of ~~5A3~~ 5A10 and ~~5D3~~ 5D0
L	7570	7633	52	5D3	5D0
L	7633	8760	53	5A6	5AG1 v. minor py, minor becoming calcareous ~863'
L	8760	8775	54	5D3	5D0 gradational upper ctc sharp lower ctc
L	8775	8869	55	5A3	~~5A16±9±*~~ ~~5C4*~~ → 5Cmot stat!! N.B. ≡ 714.7-739.8
L	8869	8920	56	5D6	mottled to 889.6'. Note: ctc (887.5') btwn two
					diff mottled 5D's, S_1 pervasive in upper, S_2 in lower

silicious exhalite equiv

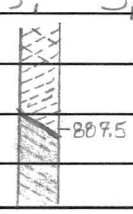

DDH 75-A079

Cyprus Anvil Mining Corp.
Lithologic Log

Logged By: JSM

Code	From	To	Unit	Code	Description
	10 14	16 20	22 23	25 27	
L	1891 2 0	1911 3 0	57	5B12	6 905-908 OQO
L	1911 3 0	1912 2 5	58	4L10	altered 5B6 ; 917-918' = brxia + sfds: 5D6 → 4L0
					@ 919' 5B2 unaltered
					gradational lower ctc
L	1912 2 5	1941 0 0	59	5B12	6 924-925' 4AA1 sphal, gal, py 4D45
					local talc, 4L3 @ 939
L	1941 0 0	1943 5	610	4A10	4CD5 <5% PbZn split SHIT!
L	1943 5	1949 5	611	4A1D	? No core remaining KA sample #1931 - "mineralized phyllite last 1.5' of section massive layered sfd 25-30% sfd 12-15% PbZn" → from KA log
L	1949 5	1951 0 9	612	5D16	5D44 incipient arkosetic alt'n
L	1951 0 9	1959 2	613	4AA	banded phyllitic 20% sfd, ~7% PbZn red sphal gal py,
					4D5 → 4AA1 ~955 4AA phyllitic per 1981 scheme
L	1959 2	1 0 0 5 0	614	5B12	6 locally 5B06 4L0 959.2 - 959.8m 3G9 v. minor py + po blebs, OQO
L	1 0 0 5 0	1 0 1 8 0	615	4L17	biotite-rich, 3B3 5B alteration of bio-rich 5B
L	1 0 1 8 0	1 0 9 9 0	616	5B12	6 note calcareous interval @ 1037.5 = 3B3 → 5D @ TOI
					OQO thin to 1.0 ft ± chlorite + carbonate
					locally biotite-rich esp 1048 - 1057, locally 5B8
					note Box 42 1057 - 1080.5 missing
L	1 0 9 9 0	1 1 2 9 6	617	4L10	broken, interbddd w/ 5B2 not so altered
					OQO 1105 - 1106.5, gouge 1122-1126 ~~calcareous~~
L	1 1 2 9 6	1 1 3 1 0 7	618	5B12	3G9 [5B62]
L	1 1 3 1 0 7	1 1 3 1 6 0	619	4E14	No core KA sample #1934 "massive banded pyritic sfd - py sphal mgt gal 15-20% PbZn" 4E48 JM
L	1 1 3 1 6 0	1 1 6 1 6 5	710	4G14	split — perhaps unit 69 is also 4G4 — fine grained honey colored sphalerite, galena, ~15% PbZn; minor mgt;
					Thin 2" intervals of 4E, 4L parting @ 1143, 1158.
					Mgt increase below 1160'. ; no ~~baryto~~calcite — non-calc.
L	1 1 6 1 6 5	1 3 1 1 2 0	711	4L10	Locally rich in biotite (altered 3G ? or altered biotite-rich 5B)
					minor pyrite patches + laminae, OQO, Fe-oxide laminae,
					some clay alteration, Pink garnets assoc w/ biotite zones.
					esp. 1271. Minor po — late fracture fill.
					In places this unit looks like 5F - see unit 72. Perhaps
					prior to 4L alteration this was a stretch of 5F +
					5B similar to units 72 + 74.

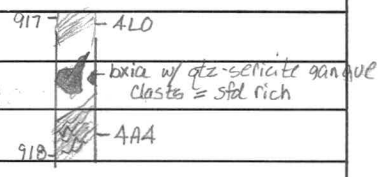

old 71 Sims not fieldtrip

DDH 75-A079

Cyprus Anvil Mining Corp.
Lithologic Log

Logged By: JSM

Code	From	To	Unit	Code	Description
1	10 14	16 20	22 23	25 27	
L	13120	13576	72	5~~F~~56	5B856 w/ OQO up to 6" some local concentrations of bio.
L	13576	13610	73	4L0	
L	13610	13750	74	5B26	slightly calcareous

In general hole just as Janet logged it

DDH 75-AD79 (2 / 8)

Cyprus Anvil Mining Corp.
Structural Log

Logged By: JSM

Code	From	To	Feature	Sym	S_1 Dip Direct.	S_2 Dip Direct.	Description
1	10 14	16 20	22 24	26	28 32	34 38	
S		1370					O/B
S		1470	CIS12			712 2310	S region 370 - 406.0
S		1620	CIS12			710 2310	there are more S observations than
S		1770	CIS12			715 2310	anuthing else but this is not a well-
S		1920	CIS12			715 2310	defined S region. Scattered Z, P, H.
S		10182	CIS12			810 2310	D sym. 62-8A
S		12145	CIS12			715 2310	
S		13153	CIS12			715 2310	
S		15100	CIS12			716 2310	
S		16100	CIS12			710 2310	note: mottled SD, missing box, split 4A
S		21160	CIS12			715 2310	∴ no point observations
S		22132	CIS12			50 2310	
S		23180	CIS12			715 2310	
S		25190	CIS12			710 2310	
S		26190	CIS12			715 2310	
S		28125	CIS12			710 2310	note: no point observations possible
S		31390	CIS12			712 2310	due to complete sampling, split
S		35122	CIS12			719 2310	+broken core, or no S_2 visible
S		31660	CIS12			614 2310	
S		38122	CIS12			910 2310	
S		38170	CIS12			618 2310	
S		40120	CIS12	S		712 2310	
S		40160	IF12	E			Z region 406.0 - 428.3
S		41195	CIS12			715 2310	
		42183	IF12	Z			M region 428.3 - 4415
		43130	CIS12			715 2310	65% S
		44115	IF12	M			P region 441.5-448.0
		44180	PIS12			610 2310	
		44180	IF12	P			M region 448.0-503.2
		46130	CIS12			816 2310	50/50 S + Z some H
		47180	CIS12			716 2310	
		49130	CIS12			810 2310	
		50132	IF12	M			R region 503.2 - 561.0
		51130	PIS12			718 2310	SD
		52150	PIS12			713 2310	
		54100	PIS12			714 2310	

DDH 75-AD-79 (2 / 8)

Cyprus Anvil Mining Corp.
Structural Log

Logged By: JSM

Code	From	To	Feature	Sym	S_1 Dip Direct.	S_2 Dip Direct.	Description
1	10 14	16 20	22 24	26	28 32	34 38	
		5150	PS12			710 2310	
		5610	F2	R			S region 561.0-784.5
		5670	CS12			715 2310	
		5820	CS12			717 2310	
		5970	CS12			715 2310	
		6120	CS12			710 2310	
		6270	CS12			616 2310	
		6420	CS12			614 2310	
		6570	CS12			710 2310	
		6720	CS12			710 2310	
		6880	CS12			615 2310	
		7030	CS12			810 2310	
		7160	CS12			717 2310	
		7300	CS12			712 2310	
		7450	CS12			812 2310	
		7600	CS12			716 2310	
		7760	CS12			810 2310	
		7845	F2	E			Z region 784.5 - 806.0
		7960	CS12			710 2310	
		8060	F2	S			S region 806.0 - 835.0
		8090	CS12			817 2310	
		8230	CS12			710 2310	
		8350	F2	E		-	Z region 835.0 - 841.0
		8370	CS12			710 2310	
		8410	F2	S			S region 841.0-
		8520	CS12			710 2310	
		8670	CS12			617 2310	
		8850	CS12			711 2310	
		8858	F2	E			Z region 885.8 - 943.2
		8994	CS12			611 2310	
		9140	CS12			5A 2310	
		9292	CS12			614 2310	
		9400	CS12			615 2310	
		9432	F2	Z			P region 943.2 - 985.0
		9490	PS12			710 2310	sfls 5D + 5B
		9600	PS12			715 2310	

DDH 75-A079 (2–8)

Cyprus Anvil Mining Corp.
Structural Log

Logged By: J.S.M.

Code (1)	From (10–14)	To (16–20)	Feature (22–24)	Sym (26)	S_1 Dip (28–32)	S_1 Direct.	S_2 Dip (34–38)	S_2 Direct.	Description
S		9840	PS2				64	230	
S		9850	F2	P					S region 985.0 - 1021.6
S		10000	CS2				74	230	not a well defined region
S		10148	CS2				65	230	scattered P, Z, + D
									S_2 changes esp. in 4L
S		10216	F2	S					H region? 1021.6 - 1048.4
S		10290	CS2				85	230	where S_2 is not horizontal, S_3
S		10390	CS2				86	230	obscures symmetry observations
S		10484	F2	H					Z region 1048.4 - 1100.0
S		10570	CS2				75	230	S_2 changes
S		10805	CS2				85	230	note: box 42 missing (1057 - 1080.5)
S		10958	CS2				70	230	
S		11000	F2	S					S region? 1100.0 - 1130.0
S		11120	CS2				72	230	readings difficult because OQO +
S		11290	CS2				70	230	gouge
S		11300	F2	S					R region 1130.0 - 1166.0
S		11446	PS2				60	230	massive sfds
S		11600	PS2				65	230	
S		11660	F2	R					P region 1166 - 1375
S		11750	PS2				80	230	two S rdgs; otherwise P
S		11908	PS2				76	230	or S_2 changing
S		12040	PS2				80	230	
S		12190	PS2				70	230	
S		12310	PS2				68	230	
S		12460	PS2				66	230	
S		12620	PS2				73	230	
S		12765	PS2				75	230	
S		12917	PS2				72	230	
S		13090	PS2				73	230	
S		13242	PS2				74	230	
S		13390	PS2				80	230	
S		13550	PS2				75	230	
S		13720	PS2				76	230	
									1375.0 E.O.H.

Shit list checked.

DDH FAGA079 (2 Feet 8)

Cyprus Anvil Mining Corp.
Structural Log

Page _____ of _____

Date: _____ Logged By: _____

Code (1)	From (10–14)	To (16–20)	Feature (22–24)	Sym (26)	S_0 Dip (28–32)	S_0 Direct.	S_1 Dip (34–38)	S_1 Direct.	S_2 Dip (40–44)	S_2 Direct	Description
F	920	930	BQ								broken OQD
F	1680	1919	N								lost core
F	1919	1940	X								oxidated
F	2400	2445	G								gray gouge
F	2840	2912	SXF		11	RFE			11	RFE	sheared 11 S_2 & oxidated c.f. Make Below
F	4070	4110	3G								gouge, massive gouge zone no alts.
F	4110	4150	B								broken core
F	4760	4790	GB								gouge & broken core IND
F	4875	4905	3G	5	11	RFE			11	RFE	gouge 11 S_2, 1.5' rec'd.
F	4970	4990	P	1							0.2' ft rec'd.
F	6080	6090	BP								broken core poor rec'y
F	6710	6800	P	3							3' rec'd.
F	10570	10805	N								core missing – entire box
F	10990	11220	B								broken core
F	11220	11260	G								gouge IND
F	11260	11290	B								broken core
F	2912	2927	X								
F		918	XQ								
F	293	307	NNN								
F	326	331	NNN								
F	387	3992	NNN								
F	9435	9480	NNN								
F	11307	11360	NNN								

DDH 75-A079 (2 / 8)

Cyprus Anvil Mining Corp.
Geochemical Log (Sampler's Copy)

Logged By: JSM

Sampled By:

Code	From	To	Sample No.	Description		
1	10 14	16 20	22 27	Length	Recovery	Unit
P	12025	12070	119019	KA 4.5		
D	12070	12145	119110	KA 7.5	7.5	4A1
P	12145	12499	119111	KA 4.9	4.9	4BA
P	12538	12580	119112	KA 4.2	4.2	5D6 locally rich in std bands
P	12580	12625	119113	KA 4.5	4.5	4A1
P	12655	12697	119114	KA 4.2	4.2	4B4
P	12697	12756	119115	KA 5.9	5.9	4B4
P	12782	12831	119116	KA 4.9	4.9	4BA, 5D6, 4A1
P	12930	12980	119117	KA 5.0	5.0	4A4
D	12980	13035	119118	KA 5.5	5.5	4A4
D	13035	13150	119119	KA 11.5	4.5	4A4
P	13150	13195	119120	KA 4.5	4.5	4A4
P	13195	13260	119211	KA 6.5	6.5	4A4
D	13260	13310	119212	KA 5.0	5.0	4A4
P	13310	13360	119213	KA 5.0	5.0	4A4
D	13360	13430	119214	KA 7.0	6.0	4A4
P	13505	13600	119215	KA 9.5	8.5	4A4
P	13745	13795	119216	KA 5.0	5.0	4A4
P	13795	13835	119217	KA 4.0	4.0	4A4
P	13876	13920	119218	KA 4.4	4.4	* 4B4 ?
P	13920	13992	119219	KA 7.2	7.2	* 4D4, 4E4 ?
P	14000	14035	119310	KA 3.5	3.5	4A4 → 4B4
P	14035	14095	119311	KA 6.0	6.0	* 4A4, 4D4 ?
P	14509	14573	119312	KA 6.4	6.4	4B4
P	14573	14597	119313	KA 2.4	2.4	4A41
P	14607	14660	119314	KA 5.3	5.3	* 4D ?
P	14660	14740	119315	KA 5.0	5.0	4G4
P	14810	14860	119316	KA 5.0	5.0	4G4
P	14860	14900	119317	KA 4.0	4.0	4G4
P	14900	14950	119318	KA 5.0	5.0	4G4
P	14950	15000	119319	KA 5.0	5.0	4G4
P	15000	15065	119410	KA 6.5	6.5	4G4

* No core remaining

Logged 1980, Checked for sampling 1981 (DSJ)

DDH 75-A079 (Feet) Cyprus Anvil Mining Corp

Page ____ of ____

Logged by JSM Checked by DSJ

ASSAY LOG (SAMPLER'S COPY) Date ____ Sampled by ____

CODE	FROM	TO	SAMPLE	INTR.	REC (cm) ft	UNIT	DESCRIPTION
	10 14	16 20	22 26	28 30	32 34	36 40	42
P	12025	12090	81891	65	65	4A1	phyllitic KERR ADD
P	12090	12156	81910	66	64	4A1	" SAMPLE ##
P	12451	12503	81911	52	42	4B4	
P	12581	12624	81912	42	42	4A1	
P	12650	12695	81913	45	44	4C0	
P	12695	12739	81914	44	44	4A0	
P	12810	12830	81915	30	27	4A0	
	12930	12980	9110446	50	50	4A4	1917
	12980	13035	9110447	55	55	4A4	1918
	13035	13150	9110448	115	45	4A4	1919
	13150	13195	9110449	45	45	4A4	1920
	13195	13260	9110450	65	65	4A4	1921
	13260	13310	9110451	50	50	4A4	1922
	13310	13360	9110452	50	50	4A4	1923
	13360	13430	9110453	70	60	4A4	1924
	13505	13600	9110454	95	85	4A4	1925
	13745	13795	9110455	50	50	4A4	1926
	13795	13835	9110456	40	40	4A4	1927
	13876	13920	9110457	44	44	4B4	1928
	13920	13992	9110458	72	72	4E4	? 4D4? 1929
	19410	19435	9110459	35	35	4A0	1930
	19435	19495	9110460	60	60	4AD	1931
	19509	19573	9110461	64	64	4A4	phyllitic 1932
	19573	19592	9110462	24	24	4A4	" 1933
	11307	11360	9110463	53	53	4E4	on 4G4 1934

C.A.M.C. 1981 - E - 5

DDH 75-A079 Cyprus Anvil Mining Corp Page ____ of ____

Logged by JSM

ASSAY LOG (SAMPLER'S COPY) Date ____ Sampled by ____

CODE	FROM	TO	SAMPLE	INTR.	REC (m)	UNIT	DESCRIPTION
	10 14	16 20	22 26	28 30	32 34	36 40	42
P	11360	11410	81916	50	49	4G4	
P	11410	11460	81917	50	50	4G4	
P	11460	11500	81918	40	40	4G4	
P	11500	11550	81919	50	50	4G4	
P	11550	11600	82000	50	50	4G4	
P	11600	11665	80981	65	65	4G4	

DIAMOND DRILL RECORD

LOGGED BY S. B. Reamsbottom

PROPERTY VANGORDA, GRUM JOINT VENTURE

	LINE GRID	HIW COORDS
LATITUDE	9 + 96 W	11,045.78' N
DEPARTURE	80 + 04 W	7597.11' E
ELEVATION	4262.98	1312.16'

BEARING OF HOLE BY TROPART

200' -- 165° 56'
400' -- 139° 40'
600' -- 136° 36'
800' -- 145° 50'
1040' -- 319° 50'
1240' -- 105° 44'

DIP OF HOLE

DIP TESTS
200' -- 98°
400' -- 87°
600' -- 85°
800' -- 86°
1040' -- 82° 1240 -- 81°

STARTED May 27, 1975

COMPLETED June 3, 1975

DEPTH Proposed:
Ultimate: 1375' (419.10 metres)
0 - 30 Tricone
0 - 40 BW 40 - 1375 BQ

D.D.H. No. 75-A79 PAGE 1 of 10

CLAIM No.

N — DIRECTION AND DISTANCE FROM NE. CLAIM POST

FOOTAGE FROM	FOOTAGE TO	DESCRIPTION	Rec. Ft.	Sample No.	Footage From	Footage To	Sample Length	Assay Pb	Assay Zn	Assay Ag	Assay Au	Assay Cu	Assay x Feet Pb	Assay x Feet Zn	Assay x Feet Ag
	11.0														
0	36.2	OVERBURDEN	2/6		40	46									
	25.7														
36.2	150	PALE GREEN-GRAY QUARTZ - SERICITE - CHLORITE PHYLLITE Sc													
		With white carbonate in quartz laminae. Good F2 foliation. F2 folds locally. Rock locally broken but recovered.	2/5		103	108									
			2/4		113	117									
		Core Angle: 40' = 70°, 50' = 67°, 60' = 64°, 70' = 75°, 80' = 69°, 90' = 71°, 100' = 70°, 110' = 58°, 120' = 67°, 130' = 76°, F2 folds. Broken ground 99-108'. 140' = 70°, 150' = 82°.													
		Sc K													
	61.7														
150	202.4	PALE GREEN SERICITE - CHLORITE - QUARTZ - CARBONATE PHYLLITE													
		Essentially same as above but very sericite-chlorite-carbonate rich. Rock has talcy, soft texture. Minor pyrrhotite, sphalerite, galena band at 191'. Thin (0.5-2") veins of cc. Mariposite in last two feet before graphite phyllite.													
		Core Angle: 160' = 78°, 170' = 78°, 180' = 78°, 190' = 76°; transposed F2 folds; 200' = 80°.													
	65.1														
202.4	215.6	MINERALIZED BLACK STRIPED QUARTZ - GRAPHITE PHYLLITE G													
		Mainly fine-grained sphalerite in foliation. Minor galena, pyrite: 3-5% sulphide, 2% lead-zinc or less.		1909	202.5	207	4.5	1.70	4.44	0.82			7.65	19.98	3.69
		Core Angle: 210' = 62°.	7.5	1910	207	214.5	7.5	2.30	4.14	0.94			17.25	31.05	7.05
				WRAK	202.5	214.5	12.0	2.08	4.25	0.90	(30.9)		24.90	51.03	10.74

DIAMOND DRILL RECORD

LOGGED BY S. B. Reamsbottom

PROPERTY

LATITUDE | BEARING OF HOLE | STARTED

DEPARTURE | DIP OF HOLE | COMPLETED

ELEVATION | DIP TESTS | DEPTH Proposed: Ultimate:

D.D.H. No. 75-A79 PAGE 2 of 10

CLAIM No.

NN ← DIRECTION AND DISTANCE FROM NE. CLAIM POST

FOOTAGE FROM	FOOTAGE TO	DESCRIPTION	Rec. Ft.	Sample No.	Footage From	Footage To	Sample Length	Assay Pb	Assay Zn	Assay Ag	Assay Au	Assay Cu	Assay x Feet Pb	Assay x Feet Zn	Assay x Feet Ag
65.7 215.6	74.1 243.3	GREEN-GRAY SERICITE - CHLORITE PHYLLITE Sc													
		Good F2. Minor chalcopyrite, sphalerite, galena in blebs and stringers. Quartz veins with chlorite, minor pyrite, pyrrhotite and galena. Mud gouge @ 240-243.3'.	5/8		222	230									
		Core Angle: 220' = 70°, 230' = 70°, 240' = 76°.													
243.3	95.4 280.4	WHITE BLEACHED QUARTZITIC SERICITE - CHLORITE PHYLLITE Sb c P													
		Mineralized. Mariposite before sulphide zone. Quartz has greenish tinge. Phyllite locally limey. Thin breccia zones rehealed by quartz-carbonate. Mineralization: Mainly fine-grained red sphalerite, pyrite, minor galena. Locally 8-10% sulphide, 3-6% lead-zinc. Note sulphide is concentrated in F1 laminae -- subvertical @ 249-250' F2 fold nose.													
		Gray quartz-graphitic mineralized phyllite last 270-273'. Note small-scale subvertical post mineralization fractures. Thin, weak mariposite shear zones within section.	4.9 /3.9	1911	245 249.9	249.9 253.8	4.9 —	2.78	3.78	1.12					
		No. 1911 -- white green quartz-sericite phyllite, 4-6% sulphide, 3-5% lead-zinc	4.2	1912	253.8	258	4.2	0.48	1.08	0.12					
		No. 1912 -- weak mineralized phyllite quartz-sericite; 3% sulphide, 0.5% lead-zinc.	4.5 /3.0	1913	258 262.5	262.5 265.5	4.5 —	1.83	4.08	0.82					
		No. 1913 -- gray quartz-sericite-graphite phyllite, 3-5% sulphide 1-3% lead-zinc	4.2	1914	265.5	269.7	4.2	1.68	4.08	0.65			7.056	17.136	2.73
		No. 1914 -- white quartz-sericite phyllite; 7-10% sulphide, 6% lead-zinc.	5.9 /2.6	1915	269.7 275.6	275.6 278.2	5.9 —	1.78	3.66	0.79			10.502	21.594	4.661
		No. 1915 -- gray quartz-graphite phyllite: 5-6% sulphide, 4-6% lead-zinc	4.9	1916	278.2	283.1	4.9	1.83	3.72	0.88					
		No. 1916 -- gray striped quartz-sericite phyllite, 5-7% sulphide 4-6% lead-zinc		WT-AV	265.5	275.6	10.1	1.74	3.83	0.73	(25.1)		17.558	38.723	7.371

DIAMOND DRILL RECORD

LOGGED BY S. B. Reamsbottom

PROPERTY

LATITUDE | BEARING OF HOLE | STARTED

DEPARTURE | DIP OF HOLE | COMPLETED

ELEVATION | DIP TESTS | DEPTH Proposed: Ultimate:

D.D.H. No. 75-A79 PAGE 3 of 10

CLAIM No.

N — DIRECTION AND DISTANCE FROM NE. CLAIM POST

FOOTAGE FROM	FOOTAGE TO	DESCRIPTION	Rec. Ft.	Sample No.	Footage From	Footage To	Sample Length	Assay Pb	Assay Zn	Assay Ag	Assay Au	Assay Cu	Assay x Feet Pb	Assay x Feet Zn	Assay x Feet Ag
		Core Angle: 250' = 63°, 260' = 76°, 270' = 68°- incipient boudinage; 280' = 62°.													
		PG													
05.4 280.4	116.1 383.5	GRAY, MINERALIZED, STRIPED, RIBBON, QUARTZ - GRAPHITE PHYLLITE	13.1		283.1	286.2									
		Thinner sections of mineralized quartz rich sericite phyllite. Note, 286.2-286.8' sphalerite rich band, 8-10% lead-zinc.	10.6		286.2	286.8		10-15% lead-zinc average							
		Rock broken, gouged locally. Also older rehealed fault breccia, ex. 334'.													
		Core Angle: 290' = 75°.													
		No. 1917 -- white quartz rich sericite phyllite: 8-10% sulphide, 6-8% lead-zinc	3.0		290	293		Average 1% lead-zinc							
		No. 1918 -- quartz rich graphite phyllite: 7% sulphide, 5% lead-zinc	5	1917	293	298	5	3.30	5.46	1.32			16.50	27.30	6.60
		No. 1919 -- weakly mineralized gouged graphite phyllite: 3-4% sulphide, 1-2% lead-zinc	5.5	1918	298 (303.5 ~ 308.5)	303.5	5.5 (5.0)	2.93	5.40	1.09			16.115 20.65	29.70 14.10	5.995 6.45
		No. 1920 -- mineralized quartz-graphite phyllite: 3-4% sulphide, 1-2% lead-zinc	4.5	1919	303.5	315	11.5	4.13	2.82	1.29					
		No. 1921 -- mineralized quartz-graphite phyllite. 3-5% sulphide. 3% lead-zinc.	4.5	1920	315	319.5	4.5	1.58	1.94	0.74			7.11	8.73	3.33
		No. 1922 -- mineralized quartz-graphite phyllite. Healed fault breccia. 3-4% sulphide, 1-3% lead-zinc.	6.5	1921	319.5	326	6.5	1.35	2.46	0.68			8.725	15.99	4.42
		No. 1923 -- as above	5	1922	326	331	5.0	2.50	4.26	1.03	6.76				
		Sulphides in above mainly fine-grained red sphalerite, pyrite, lesser galena. Minor magnetite. Note sulphide fragments in brecciated zones.	5	1923	331	336	5.0	1.48	3.00	0.62	4.48		5.79 %		
			6	1924	336	343	7.0	1.90	4.14	0.85	6.04				
				WT. Av.	293.0	308.5	15.5	3.44	4.59	1.23	(42.1)		53.265	71.10	19.065
		Core Angle: 300' = 75°, 310' = 79°, 320' = 59°, 330' = 76°, 340' = 61°.		WT. Av.	293.0	303.5	10.5	3.11	5.43	1.2	(41.1)		32.615	57.00	12.585
				WT. Av	315.0	326.0	11.0	1.44	2.25	0.70	(24.2)		15.885	24.72	7.75
			7.5		343.0	350.5	—								

DIAMOND DRILL RECORD

LOGGED BY S. B. Reamsbottom

PROPERTY

LATITUDE BEARING OF HOLE STARTED

DEPARTURE DIP OF HOLE COMPLETED

ELEVATION DIP TESTS DEPTH Proposed: Ultimate:

D.D.H. No. 75-A79 PAGE 4 of 10

CLAIM No.

N

DIRECTION AND DISTANCE FROM NE. CLAIM POST

FOOTAGE FROM	FOOTAGE TO	DESCRIPTION	Rec. Ft.	Sample No.	Footage From	Footage To	Sample Length	Assay Pb	Assay Zn	Assay Ag	Assay Au	Assay Cu	Assay x Feet Pb	Assay x Feet Zn	Assay x Feet Ag
			8.5	1925	350.5	360	9.5	0.93	1.84	0.44					
		No. 1924 -- mineralized quartz-graphite phyllite; 3-5% sulphide, 3-4% lead-zinc. Weak mineralized phyllite.			360	365		Weak mineralized phyllite; 0.5% lead-zinc, FST.							
		No. 1925 -- mineralized quartz-graphite phyllite; 3-4% sulphide, - % lead-zinc.			365	374.5		Phyllite							
		No. 1926 -- mineralized quartz-graphite phyllite: F2 folds, 5-6% sulphide, 4-5% lead-zinc	5	1926	374.5	379.5	5.0	1.19	3.60	0.59					
		No. 1927 -- mineralized quartz-graphite, quartz-sericite phyllite: 5-6% sulphide, 4-6% lead-zinc	4 14.1	1927	379.5	383.5	4.0	4.50	5.28	1.76					
					383.5	387.6	—	white bleached sericite phyllite							
		Core Angle: 350' = 71°, 360' = 52°, F2 fold noses; 370' = 66°, 380' = 83°, F2 folds.	4.4	1928	387.6	392	4.4	2.78	6.48	1.44			12.232	28.512	6.336
			7.2	1929	392	399.2	7.2	6.17	10.92	2.94			44.424	78.624	21.168
116.1 383.5	121.6 399.2	SULPHIDE ZONE IN WHITE QUARTZ - SERICITE PHYLLITE P.S													
		Mineralized phyllite and bands of massive sulphide.													
		No. 1928 -- mineralized white quartzitic sericite phyllite: zinc rich in F1, F2 laminae: 10% sulphide, 6-8% lead-zinc.		Wt. Av.	387.6	399.2	11.6	4.88	9.24	2.37 (81.3)			56.656	107.136	27.504
		No. 1929 -- banded and massive sulphide in quartz-sericite gangue: 70% sulphide, 15-20% lead-zinc red-orange sphalerite, galena, pyrite, minor chalcopyrite. Thin (0.5') quartz-sericite-chlorite-mariposite parting @ 397'.													
		Core Angle: 390' = 75°, 395' = 85°, 400' = 78°.													

DIAMOND DRILL RECORD

LOGGED BY S. B. Reamsbottom

PROPERTY

LATITUDE BEARING OF HOLE STARTED

DEPARTURE DIP OF HOLE COMPLETED

ELEVATION DIP TESTS DEPTH Proposed: Ultimate:

D.D.H. No. 75-A79 PAGE 5 of 10

CLAIM No.

N

DIRECTION AND DISTANCE FROM NE. CLAIM POST

FOOTAGE FROM	FOOTAGE TO	DESCRIPTION	Rec. Ft.	Sample No.	Footage From	Footage To	Sample Length	Assay Pb	Assay Zn	Assay Ag	Assay Au	Assay Cu	Assay x Feet Pb	Assay x Feet Zn	Assay x Feet Ag
121.6	134.6														
399.2	441.5	DARK GRAY SERICITE - QUARTZ PHYLLITE S													
		Locally dark bottle green, probably due to minor chloritic content. Note, thin bands of massive sulphide at 405.5'. F2	1/3		405.5	406.8		Estimate 6-7% lead-zinc							
		dominant. Many small-scale transposed F2 fold noses. Blebs	1/2		436	438									
		of pyrite, chalcopyrite throughout, Mud fault gouge @ 407-411'. Recovery good.													
		Core Angle: 410' = 60°, 420' = 80°, 430' = 70°.													
441.5	499	GRADES TO BLACK STRIPED QUARTZ - GRAPHITIC PHYLLITE G													
		Good F2. F2 folds common. Blebs of pyrite, some with quartz pressure shadows. Note fine-grained sphalerite, galena (2")		Good Recovery.											
		at 468'. Note broken gouge @ 489'.													
		Core Angle: 440' = 74°, 450' = 61°; 460' = 76°, good F2 folds; 470' = 82°, 480' = 80°, 490' = 70°.													
499	608	PALE GREEN QUARTZ - SERICITE - CHLORITE PHYLLITE Sc													
		Excellent F2 foliation. Note locally mottled textures -- porphyroblasts of cc after plag?													
		Thin (3-5 mm) veins, laminae of cream to pinkish quartz-carbonate. Minor pyrite, sphalerite @ 531.5'. Good recovery.	0.4/2		497	499									
		Core Angle: 500' = 75°, 510' = 70°, F2 fold nose; 520' = 75°, 530' = 80°, 540' = 85°.													

DIAMOND DRILL RECORD

LOGGED BY S. B. Reamsbottom

PROPERTY

LATITUDE | BEARING OF HOLE | STARTED

DEPARTURE | DIP OF HOLE | COMPLETED

ELEVATION | DIP TESTS | DEPTH Proposed: Ultimate:

D.D.H. No. 75-A79 PAGE 6 of 10

CLAIM No.

N — DIRECTION AND DISTANCE FROM NE. CLAIM POST

FOOTAGE FROM	FOOTAGE TO	DESCRIPTION
		Rock becomes more carbonate rich @ 540' onwards. More broken ground. Crumbly, more talcy texture phyllite. Minor pyrite, sphalerite @ 552-553'. Last few feet are sericite rich.
		Core Angle: 550' = 70°, 560' = 76°, 570' = 78°, 580' = 72°, 590' = 67°, 600' = 80°.
185.3 608	192.0 630	BLACK QUARTZ - GRAPHITE PHYLLITE G Thinly laminated, good F2 foliation. Poker chips. Blebs of pyrite.
		Core Angle: 610' = 72°, 620' = 76°, 630' = 60°.
630	211.0 695.7	PALE GREEN SERICITE - CHLORITE - QUARTZ PHYLLITE Sc With pale carbonate in F1 and F2. Pinkish quartz-carbonate veins. Good F2. c.f. 2 above unit. White powdery cc lines carbonate veins. Note graphite phyllite @ 673.6-680' (?) C.A. 640' = 59 , small-scale F2 folds. Minor pyrite-pyrrhotite, sphalerite possibly galena - from 664-680'. Quartz veins @ 680'.
		Core Angle: 650' = 70°, 660' = 76°, 670' = 70°, F2 folds, 680' = 75°, 690' = 69°.

Rec. Ft.	Sample No.	Footage From	Footage To	Sample Length	Assay Pb	Assay Zn	Assay Ag	Assay Au	Assay Cu	Assay x Feet Pb	Assay x Feet Zn	Assay x Feet Ag
8/9		541	550									
1.5/2		550	552									
0.6		552	553									
3/4		558	562									
		572	577		Broken, gougy							
3/6.5		620	626.5									
0.2/4		676	680		Rock broken.							

DIAMOND DRILL RECORD

LOGGED BY S. B. Reamsbottom

PROPERTY

LATITUDE BEARING OF HOLE STARTED

DEPARTURE DIP OF HOLE COMPLETED

ELEVATION DIP TESTS DEPTH Proposed: Ultimate:

D.D.H. No. 75-A79 PAGE 7 of 10

CLAIM No.

N — DIRECTION AND DISTANCE FROM NE. CLAIM POST

FOOTAGE FROM	FOOTAGE TO	DESCRIPTION	Rec. Ft.	Sample No.	Footage From	Footage To	Sample Length	Assay Pb	Assay Zn	Assay Ag	Assay Au	Assay Cu	Assay x Feet Pb	Assay x Feet Zn	Assay x Feet Ag
212.0	270.3														
695.7	887	BLACK STRIPED QUARTZ - GRAPHITIC PHYLLITE G													
		Thinly laminated, good F2, locally good F2 fold noses. Thin (0.5') zone of green-chlorite-sericite phyllite with mariposite (711-712') Quartz veins @ 719-725, 740-742'. Rock broken -- 711-725'.		Good	Recovery.										
		Blebs and stringers of pyrite, pyrrhotite with minor sphalerite -- 707', 714' and 746'.													
		Core Angle: 700' = F2 40 , F1 55 opp dip F2 folds, 710' = 77°, 720' = 62°, 730' = 72°, 740' = 60°, 750' = 73°, 760' = 49°.													
		763-808' -- well laminated graphitic phyllite. Blebs of pyrite, lesser pyrrhotite. Excellent recovery.													
		808- -- very striped, altered laminae quartz-graphite, note carbonate		Good	Recovery										
		Core Angle: 770' = 85°, 780' = 60°, 790' = 72°, 800' = 75°, 810' = 84°, 820' = 70°, 830' = 85°, 840' = 80°, 850' = 74°, 860' = 77°.													
		Throughout section excellent F1 laminae, define folded micro-lithous. F1 subvertical to F2; F2 laminae 2-5 mm apart.													
		Local F3 kinks. Minor pyrite blebs. Note graphite rounded clasts at 860'.													
		Core Angle: 870' = 70°, 880' = 65°.													
887	286.5 940	GRAY QUARTZ - SERICITE PHYLLITE WITH WHITE-GREENISH ZONES S													
		1-2' of quartz-sericite-chlorite phyllite. Many quartz veins with granular chlorite. Buff carbonate stringers in F2 foliation.	1.0		917	918		6% lead-zinc, Est.							
		Thin zones of sphalerite, pyrite, minor chalcopyrite. Fine-grained sphalerite @ 930'.	1.5 / 0.5		924 / 929.2	925.5 / 929.7		15-20% lead-zinc. 2.5 % Pb + Zn, Est.			Sphalerite rich.				

DIAMOND DRILL RECORD

LOGGED BY S. B. Reamsbottom

PROPERTY

LATITUDE | BEARING OF HOLE | STARTED

DEPARTURE | DIP OF HOLE | COMPLETED

ELEVATION | DIP TESTS | DEPTH Proposed: Ultimate:

D.D.H. No. 75-A79 PAGE 8 of 10

CLAIM No.

N — DIRECTION AND DISTANCE FROM NE. CLAIM POST

FOOTAGE FROM	FOOTAGE TO	DESCRIPTION	Rec. Ft.	Sample No.	Footage From	Footage To	Sample Length	Assay Pb	Assay Zn	Assay Ag	Assay Au	Assay Cu	Assay x Feet Pb	Assay x Feet Zn	Assay x Feet Ag
286.5 940	292.5 959.7	MINERALIZED WHITE QUARTZ - SERICITE PHYLLITE WITH BAND OF S.M MASSIVE LAYERED SULPHIDE (1.5' wide)	3.5	1930	940	943.5	3.5	0.88	1.74	0.35					
			6	1931	943.5	949.5	6.0	2.23	4.26	1.15			13.38	25.56	6.90
		Sulphide: 25-30%: Fine-grained red spahlerite, galena, pyrite minor chalcopyrite. Grade 8-11%: M.S. band - 15-20%.	1.4		949.5	950.9		chlorite-sericite phyllite					0	0	0
		No. 1930 -- weak mineralized quartz-sericite phyllite: 8% sulphide, 3-5% lead-zinc	6.4	1932	950.9	957.3	6.4	2.28	3.60	1.06			14.592	23.04	6.784
		No. 1931 -- mineralized phyllite, last 1.5' of section massive layered sulphide. 25-30% sulphide, 12-15% lead-zinc	2.4	1933	957.3	959.7	2.4	2.33	2.46	0.82			5.592	5.904	1.968
		No. 1932 -- mineralized quartz-sericite phyllite: 20% sulphide 8% lead-zinc													
		No. 1933 -- weak mineralized phyllite: 3-5% sulphide, 1-3% lead-zinc		WT. AV.	943.5	959.7	16.2	2.07	3.36	0.97	(33.1)		33.564	54.504	15.652
		Core Angle: 945' = 71°, 950' = 75°, 960' = 63°.													
959.7	306.3 1005	GRAY QUARTZ - SERICITE PHYLLITE. LOCALLY GRAPHITIC Sq													
		Bleached 1 foot below sulphides. Dominant F2. Quartz-chlorite veins. Pyrrhotite blebs @ 981' and 1000'.		Recovery Good.											
		Core Angle: 970' = 76°, 980' = 71°, 990' = 81°, 1000' = 67°.													
1005	310.3 1018	PALE WHITE SERICITE - BIOTITE - CHLORITE - QUARTZ PHYLLITE S.bio.c													
		Dark brown biotite in F1 folded laminae; disseminated pyrite in these laminae also, quartz-chlorite veins. Minor pyrrhotite,													
		fine-grained sphalerite @ 1007'.													
		Core Angle: 1010' = 75°. NB Biotite - grade equivalent of quartz-sericite phyllite.													

DIAMOND DRILL RECORD

LOGGED BY S. B. Reamsbottom

PROPERTY

LATITUDE BEARING OF HOLE STARTED

DEPARTURE DIP OF HOLE COMPLETED

ELEVATION DIP TESTS DEPTH Proposed: Ultimate:

D.D.H. No. 75-A79 PAGE 9 of 10

CLAIM No.

N

DIRECTION AND DISTANCE FROM NE. CLAIM POST

FOOTAGE FROM	FOOTAGE TO	DESCRIPTION	Rec. Ft.	Sample No.	Footage From	Footage To	Sample Length	Assay Pb	Assay Zn	Assay Ag	Assay Au	Assay Cu	Assay x Feet Pb	Assay x Feet Zn	Assay x Feet Ag
310.3	335.3														
1018	1100	GRAY QUARTZ - SERICITE PHYLLITE S. bio													
		Locally chlorite-biotite rich (probably crossed biotite isograd @ 1105') Rock quite phyllitic. Quartz-chlorite veins (1-6")		Good Recovery.											
		Some with carbonate. Thin F1 laminae subvertical to F2. Blebs, stringers of pyrite,													
		Core Angle: 1020' = 76°, 1030' = 67°, 1040' = 76°, F1 opp dip,													
		1050' = 65°, 1060' = 72°, F1 opp dip, 1070' = 87°,													
		1080' = 80°, 1090' = 72°, 1100' = 66°.													
	344.6														
1100	1130.7	ZONE OF BLEACHED BROKEN WHITE QUARTZ - SERICITE PHYLLITE Sb													
		and GRAY SERICITE PHYLLITE	2/5.5		1113	1118.5									
		Quartz veins. Blebs of pyrite.													
		Note, rock soft gougy @ 1117-1130.7'.	2/4		1122	1126									
		Core Angle: 1110' = 81°, good F2 folds, 1120' = 55°, 1130' = 65°	2/3.5		1126	1129.5									
	355.5														
1130.7	1166.5	MASSIVE BANDED PYRITIC SULPHIDE M. Sc													
		Thin (0.5') stringers of chlorite-sericite phyllite in zone.	5.3	1934	1130.7	1136	5.3	5.84	5.40	1.79			30.952	28.62	9.487
		80-90% sulphide: pyrite, dark brown sphalerite, fine-grained galena, 1-2% magnetite, minor chalcopyrite. Lower 10' or so of section rich in barite.	5	1935	1136	1144	5.0	8.11	8.11	2.56			40.55	40.55	12.80
		No. 1934 -- pyrite, sphalerite, magnetite, galena, 15-20% lead-zinc	5	1136	1141	1146	5.0	5.71	6.12	1.84			28.55	30.60	9.20
		No. 1935 -- M.S. pyrite, sphalerite, matnetite, galena, 15-20% lead-zinc	4	1137	1146	1150	4.0	7.21	8.22	2.18			28.84	32.88	8.72
		No. 1936 -- M.S. 1' phyllite parting: 10-15% lead-zinc	5	1138	1150	1155	5.0	4.20	6.36	1.56			21.00	31.80	7.80
		No. 1937 -- M.S. 15-20% lead-zinc													

DIAMOND DRILL RECORD

LOGGED BY S. B. Reamsbottom

PROPERTY

LATITUDE | BEARING OF HOLE | STARTED

DEPARTURE | DIP OF HOLE | COMPLETED

ELEVATION | DIP TESTS | DEPTH Proposed: Ultimate:

D.D.H. No. 75-A79 PAGE 10 of 10

CLAIM No.

N

DIRECTION AND DISTANCE FROM NE. CLAIM POST

FOOTAGE FROM	FOOTAGE TO	DESCRIPTION
		No. 1938 -- barite rich, M.S. 1 5% lead-zinc
		No. 1939 -- banded M.S. 15% lead-zinc
		No. 1940 -- banded barite, 10% lead-zinc
		Note, all are magnetitc - (1-3% magnetite)
		Core Angle: 1140' = 60°, 1150' = 85°, 1160' = 75°.
355.5	411.1	Sb-c.bio
1166.5	1375	BLEACHED CREAM-WHITE-GREENISH SERICITE - QUARTZ - CHLORITE PHYLLITE (minor biotite-garnet deeper in section) Creamy carbonate sericite laminae. Minor chlorite gives green tinge. Laminae blebs of pyrite, pyrrhotite throughout. Biotite in 1237' followed by garnet @ 1271' (pinkish crystals) Quartz-chlorite throughout.
		Core Angle: 1170' = 75°, 1180' = 85°, 1190' = 65°, 1200' = 68°, 1210' = 55°, 1220' = 75°, 1230' = 70°, 1240' = 77°, 1250' = 65°, 1260' = 60°, 1270' = 70°, 1280' = 71°, 1290' = 75°, 1300' = 69°, 1310' = 74°, 1320' = 78°, 1330' = 70°, 1340' = 75°, 1350' = 74°, 1360' = 78°, 1370' = 70°, 1375' = 76°.
	1375	END OF HOLE
		REMARKS: Hole cemented from 1375' upwards, 12 bags used.

Rec. Ft.	Sample No.	Footage From	Footage To	Sample Length	Assay Pb	Assay Zn	Assay Ag	Assay Au	Assay Cu	Assay x Feet Pb	Assay x Feet Zn	Assay x Feet Ag
5	1939	1155	1160	5.0	4.58	6.36	1.56			22.90	31.80	7.80
6.5	1940	1160	1166.5	6.5	4.35	6.60	1.62			28.275	42.90	10.53
	Wt. Av.	1130.7	1166.5	35.8	5.62	6.68	1.85	(63.5)		201.067	239.15	66.33
	Wt. Av.	1136.0	1150.0	14.0	7.	7.43	2.19	(75.2)		97.94	104.03	30.72
	Recovery Good.											

FAGA085

DRILL HOLE : FAGA085

NORTHING : 905,154.8

EASTING : 592,120.3

ELEVATION : 1,307.6

TOTAL DEPTH : 431.0

SECTION : W 82

R.F.E. : S2

RFE DIRECTION: 230

PLUNGE ANGLE : 11

PLUNGE DIRECT: 312

DHD CALC: 1

SS CALC: 1

DETAIL RECORD COUNTS:

NOS ORE-SAMPLES: 65

NOS DOWN-H-SURVEYS: 8

NOS DOWN-H-LITHOLOGY: 102

NOS DOWN-H-STRUCTURE: 50

NOS DOWN-H-FAULTS: 42

NOS DOWN-H-SPLINES: 8

NOS COMPOSITES: 0

DDH: FAGA085 UTM-N: 905,154.8 UTM-E: 592,120.3 UTM-ELEV: 1,307.6 TOTAL DEPTH: 431.0 SECTION: W 82
RFE: S2 RFE DIR: 230 PLUNGE ANGLES: 11 312 DHD CALC: 1 SS CALC: 1

DEPTHS FROM	DEPTHS TO	SAMPLE NO.	INT.	REC.	ROCK UNIT	ASSAYS S.G. PULP	CU %	PB %	ZN %	AG(AA) G/MT	AG(FA) G/MT	AU(FA) G/MT	PO %	PY %	TOT FE	BAO %	HG %	MN %	AS %	BA %	S.G. W.R.
181.4	184.7	12579	3.3	.0	4A4	3.27	.04	2.41	4.86	43.00		.47	2	10	13						
184.7	185.9	12580	1.2	.0	4CO	3.06	.07	.81	1.65	15.99		.34	2	10	13						
185.9	187.3	12581	1.4	.0	4A4	3.14	.05	1.85	3.79	33.00		.68	3	5	9						
187.3	189.3	12582	2.0	.0	4AO	2.98	.05	.78	1.63	14.99		.55	1	5	6						
189.3	191.1	12583	1.8	.0	4AO	2.89	.05	1.32	2.62	24.00		.47	1	2	3						
191.1	192.9	12584	1.8	.0	4AO	2.87	.02	1.34	1.60	23.00		.68		2	3						
192.9	195.1	12585	2.2	.0	4AO	2.93	.02	1.33	1.60	24.00		.62	1	4	5						
195.1	196.9	12586	1.8	.0	4AO		.11	.52	.65	13.00											
196.9	198.9	90414	2.0	.0	4CO			.24	.62	6.20											
198.9	201.9	90415	3.0	.0	4CO			.40	1.08	8.90											
201.9	205.0	90416	3.1	.0	4C5			.82	.93	13.00											
205.0	208.0	90417	3.0	.0	4C5			.42	.68	5.09											
208.0	211.1	90418	3.1	.0	4C5			.44	1.13	6.20											
211.1	214.1	90419	3.0	.0	4CO			.44	1.10	5.09											
214.1	217.2	90420	3.1	.0	4CO			.80	1.15	12.00											
217.2	218.3	90421	1.6	.0	4DO			2.48	5.82	34.29											
219.9	221.9	90422	2.0	.0	3GO			.19	.33	.99											
221.9	224.5	90423	2.6	.0	3GO			.22	.47	2.10											
224.5	225.4	12587	.9	.0	4C5	2.83	.02	1.07	1.83	17.00		.27	2		2						
225.4	228.1	12588	2.7	.0	4C5	2.87	.08	1.72	2.31	28.99		.62	2	2	5						
228.1	230.4	12589	2.3	.0	4D5	2.99	.05	2.98	2.77	48.00		.75	1	1	3						
230.4	232.3	12590	1.9	.0	4C5	2.93	.04	2.10	.55	27.99		.62		2	3						
232.3	234.1	12591	1.8	.0	4C5	2.89	.02	2.46	2.21	30.99		.68	1	1	2						
234.1	235.9	12592	1.8	.0	4C5	2.85	.01	1.31	3.27	21.00		.40	1		1						
235.9	237.7	12593	1.8	.0	4C5	2.97	.02	.99	1.59	13.99		.34	1	1	2						
237.7	239.6	12594	1.9	.0	4C5	3.00	.05	1.44	1.60	23.00		.68	2	1	3						
239.6	242.8	90449	3.2	.0	4D5			3.00	3.95	36.29											
242.8	244.6	12595	1.8	.0	4C5	2.98	.04	2.25	3.20	35.00		.81	1	2	3						
244.6	246.1	12596	1.5	.0	4C5	2.98	.08	1.32	2.70	26.00		.75	2	1	4						
246.1	246.9	12597	.8	.0	4CO		.02	.63	1.62	9.00											
258.0	261.1	90424	3.1	.0	4CO			.59	1.10	9.90											
261.1	262.7	90425	1.6	.0	4CO			.38	.61	7.20											
262.7	264.6	90426	1.9	.0	4A4			3.83	3.95	47.29											
264.6	266.2	90427	1.6	.0	4A4			2.37	3.72	30.19											
266.2	268.6	90428	2.4	.0	4A4			4.73	5.40	65.50											
268.6	270.6	90429	2.0	.0	4AO			.97	1.67	17.10											
270.6	273.6	90430	3.0	.0	4CO			.34	.28	6.20											
273.6	277.7	90431	4.1	.0	4AO			1.19	1.41	23.30											
281.6	284.7	90432	3.1	.0	4A30			1.37	1.39	21.30											
288.6	290.8	12598	2.2	.0	4AO		.11	.88	1.14	22.00											
290.8	292.9	12599	2.1	.0	4AO		.08	.77	1.06	14.99											
292.9	296.0	90433	3.1	.0	4A4			4.13	3.95	45.29											
296.0	299.3	12600	3.3	.0	4AO	3.12	.07	1.12	1.41	19.00		.68	1	11	12						
299.3	302.8	90434	3.5	.0	4A4			2.77	2.81	36.29											
302.8	304.2	12601	1.4	.0	4AO		.22	.13	.35	11.00											
304.2	306.3	12602	2.1	.0	4EG	4.55	.10	6.90	12.69	131.00		1.16		19	20						

DDH: FAGA085 UTM-N: 905,154.8 UTM-E: 592,120.3 UTM-ELEV: 1,307.6 TOTAL DEPTH: 431.0 SECTION: W 82
RFE: S2 RFE DIR: 230 PLUNGE ANGLES: 11 312 DHD CALC: 1 SS CALC: 1

DEPTHS FROM	DEPTHS TO	SAMPLE NO.	INT.	REC.	ROCK UNIT	ASSAYS S.G. PULP	CU %	PB %	ZN %	AG(AA) G/MT	AG(FA) G/MT	AU(FA) G/MT	PO %	PY %	TOT FE	BAC %	HG %	MN %	AS %	BA %	S.G. W.R.
340.9	343.8	90436	2.9	.0	4D43			5.25	6.95	65.50											
343.8	346.3	90437	2.5	.0	4D43			5.23	11.52	80.59											
346.3	347.5	90438	1.2	.0	4D43			4.84	7.48	64.50											
348.1	351.1	90439	3.0	.0	4D43			5.98	9.02	80.59											
351.1	352.3	90440	1.2	.0	4E4			4.54	7.67	55.49											
352.3	354.8	12603	2.5	.0	4E0	4.46	.33	2.56	3.00	43.00		1.78	1	33	35						
354.8	357.0	12604	2.2	.0	4E0	4.70	.35	2.52	2.74	55.00		1.85	2	37	39						
357.0	357.8	90441	.8	.0	4D45			6.34	9.97	90.79											
357.8	359.4	12605	1.6	.0	4D45	3.56	.10	7.70	17.50	148.00		1.64	2	8	10						
359.4	360.6	12606	1.2	.0	4D45	3.62	.11	7.99	12.40	150.00		1.98	3	10	13						
360.6	361.6	90442	1.0	.0	4D0			3.87	4.62	61.39											
366.5	368.5	90443	2.0	.0	4L57			.42	.26	7.20											
368.5	369.1	90444	.6	.0	4L57			.65	1.12	14.09											
390.8	391.5	90445	.7	.0	4A0			.63	1.06	8.90											
391.5	392.4	90446	.9	.0	4E47			5.12	3.95	50.70											
392.4	393.5	12607	1.1	.0	4C0	3.16	.10	1.25	1.27	20.00		.34	4	6	11						
393.5	395.2	90447	1.7	.0	4E4			4.65	3.66	51.39											
400.2	400.7	90448	.5	.0	4E80			2.77	2.75	35.29											
WEIGHTED AVERAGE																					
181.4	218.8		37.4	.0		1.11	.02	.97	1.82	16.56		.20		2	2						
219.9	246.9		27.0	.0		2.00	.03	1.66	2.10	24.16		.41	1	1	2						
258.0	277.7		19.7	.0				1.66	2.07	24.66											
281.6	284.7		3.1	.0				1.37	1.39	21.30											
288.6	306.3		17.7	.0		1.12	.06	2.51	3.31	39.58		.26		4	4						
338.1	347.5		9.4	.0				4.94	8.17	69.38											
348.1	361.6		13.5	.0		2.33	.14	4.90	7.80	80.57		1.00	1	14	15						
366.5	369.1		2.6	.0				.48	.46	8.79											
390.8	395.2		4.4	.0		.79	.02	3.25	2.71	36.64		.08	1	1	2						
400.2	400.7		.5	.0				2.77	2.75	35.29											

DDH: FAGA035 UTM-N: 905,154.8 UTM-E: 592,120.3 UTM-ELEV: 1,307.6 TOTAL DEPTH: 431.0 SECTION: W 82
RFE: S2 RFE DIR: 230 PLUNGE ANGLES: 11 312 DHD CALC: 1 SS CALC: 1

DEPTH	ZENITH	AZIMUTH
0.000	180.000	0.000
61.000	177.500	79.000
121.900	174.000	107.000
182.900	173.000	106.000
243.900	173.200	138.000
304.800	172.200	183.000
384.000	172.400	183.000
402.300	172.200	183.000

DDH: FAGA085 UTM-N: 905,154.8 UTM-E: 592,120.3 UTM-ELEV: 1,307.6 TOTAL DEPTH: 431.0 SECTION: W 82
RFE: S2 RFE DIR: 230 PLUNGE ANGLES: 11 312 DHD CALC: 1 SS CALC: 1

DEPTH	UNIT	CODE	DESC	RECOVERY	IND
6.1	0001	#		0.5-	1
31.1	0002	#		0.5-	1
35.5	0003	5B80		0.5-	1
37.2	0004	5D0		0.5-	1
39.9	0005	5B80	[5B0 &8]	0.5-	1
40.7	0006	5D0		0.5-	1
60.2	0007	5B80	[5B0 &8] (5D0) MINOR	0.5-	1
60.7	0008	5D0		0.5-	1
61.9	0009	5B80		0.5-	1
63.4	0010	5B80		0.5-	1
64.8	0011	5D0		0.5-	1
65.4	0012	5B0	&2 &8	0.5-	1
65.8	0013	5D0		0.5-	1
75.6	0014	5B0	(5B80)	0.5-	1
94.2	0015	5D0	&@	0.5-	1
95.1	0016	5B	GOUGE	0.5-	1
105.2	0017	5B0	&8 &2	0.5-	1
116.1	0018	5B0		0.5-	1
117.3	0019	5D0	(5B80) 50:50	0.5-	1
146.3	0020	5B0	(5B80)(5B20)(5D0)	0.5-	1
146.8	0021	5E0		0.5-	1
166.1	0022	5B0	&8 &2 (5D0)	0.5-	1
166.7	0023	5D0		0.5-	1
172.4	0024	5B0	(5D0) 80:20	0.5-	1
174.3	0025	5D*	&0	0.5-	1
181.1	0026	5B62	(5B62@)	0.5-	1
181.4	0027	5B62		0.5-	1
184.7	0028	4A4	(4A34)	0.5-	1
185.9	0029	4C0		0.5-	1
186.2	0030	5D*	(4D)	0.5-	1
186.8	0031	4A4		0.5-	1
187.3	0032	5D4*	(4C0)	0.5-	1
196.9	0033	4A0	(5A19)	0.5-	1
200.3	0034	4C0	(5D)	0.5-	1
210.0	0035	4C5	(5D4*) 95:05	0.5-	1
217.2	0036	4C0	(5D4*) 95:05	0.5-	1
219.3	0037	4D0	NO CORE	0.5-	1
223.9	0038	3G0	[5D4]	0.5-	1
224.5	0039	3G0	(10Q*)	0.5-	1
228.1	0040	4C5	(4D5) 70:30	0.5-	1
230.4	0041	4D5		0.5-	1
239.6	0042	4C5		0.5-	1
242.3	0043	4D5	NO CORE	0.5-	1
246.1	0044	4C5		0.5-	1
246.9	0045	4C0		0.5-	1
247.8	0046	3G9	(3B3)	0.5-	1
248.0	0047	3G0		0.5-	1
248.7	0048	5D$		0.5-	1
251.9	0049	3B3	(3G9) BIOTITE	0.5-	1
257.3	0050	3G9		0.5-	1
258.0	0051	4L0		0.5-	1

DDH: FAGA035 UTM-N: 905,154.8 UTM-E: 592,120.3 UTM-ELEV: 1,307.6 TOTAL DEPTH: 431.0 SECTION: W 82
RFE: S2 RFE DIR: 230 PLUNGE ANGLES: 11 312 DHD CALC: 1 SS CALC: 1

DEPTH	UNIT	CODE	DESC	RECOVERY	IND
262.9	0052	4CO	(5D*) 97:03	0.5-	1
268.5	0053	4A4	NO CORE	0.5-	1
270.7	0054	4AO		0.5-	1
273.7	0055	4CO	(5D*)(5C*)	0.5-	1
277.7	0056	4AO	(4A4) MINOR	0.5-	1
281.6	0057	4A30		0.5-	1
285.9	0058	4AO		0.5-	1
288.6	0059	4AO	(4LO&7)(5D*4)	0.5-	1
292.9	0060	4AO	&3	0.5-	1
296.0	0061	4A4	NO CORE	0.5-	1
299.3	0062	4AO		0.5-	1
303.0	0063	4A4	NO CORE	0.5-	1
304.2	0064	4AO		0.5-	1
304.8	0065	4E4	[4J]	0.5-	1
306.3	0066	4G4	(4E46)	0.5-	1
306.5	0067	5D4*		0.5-	1
313.0	0068	5AO$	(5DO)	0.5-	1
313.2	0069	5DO		0.5-	1
321.0	0070	5AO$		0.5-	1
321.3	0071	5DO		0.5-	1
322.8	0072	5AO$		0.5-	1
328.6	0073	5A6	(3G9)	0.5-	1
337.4	0074	5AO$	(5A6) [3G9]	0.5-	1
338.3	0075	3GO		0.5-	1
340.6	0076	4D4	NO CORE	0.5-	1
340.9	0077	5D4*	NO CORE	0.5-	1
347.5	0078	4D43	NO CORE	0.5-	1
348.1	0079	5D4*	(10QO)	0.5-	1
352.3	0080	4D43	[4DE] NO CORE	0.5-	1
357.0	0081	4EO	(4E4) 90:10	0.5-	1
358.0	0082	4D45	NO CORE	0.5-	1
360.6	0083	4D45	.	0.5-	1
361.2	0084	4DO	NO CORE	0.5-	1
367.7	0085	3G9	(10Q*)	0.5-	1
369.3	0086	4L57	(4L14) [5D4* AND 4C]	0.5-	1
370.6	0087	3G9	(4L3) AT BASE	0.5-	1
371.6	0088	3G93		0.5-	1
373.4	0089	4LO	&7	0.5-	1
388.0	0090	3G93	*	0.5-	1
389.8	0091	4LO	&4 &9 &6	0.5-	1
390.8	0092	5A6	&2	0.5-	1
391.5	0093	4AO		0.5-	1
392.4	0094	4E47	NO CORE	0.5-	1
393.5	0095	4CO		0.5-	1
395.3	0096	4E4	NO CORE	0.5-	1
400.2	0097	5A16	9 (4AO) MINOR	0.5-	1
400.7	0098	4E80	(4C5)	0.5-	1
403.3	0099	4L73	&1	0.5-	1
418.9	0100	4L67	9	0.5-	1
425.5	0101	4L73	1 [5DO(383)]	0.5-	1
431.0	0102	5A10	&9 (5D6 BIOTITE)	0.5-	1

DDH: FAGA085 UTM-N: 905,154.8 UTM-E: 592,120.3 UTM-ELEV: 1,307.6 TOTAL DEPTH: 431.0 SECTION: W 82
RFE: S2 RFE DIR: 230 PLUNGE ANGLES: 11 312 DHD CALC: 1 SS CALC: 1

DDH	F DEPTH	T DEPTH	FEAT	SYMTRY	S0 ANGLE	S0 DIRECT	S1 ANGLE	S1 DIRECT	S2 ANGLE	S2 DIRECT	RFE CDE	DHDC	SDC	PROCESS
FAGA085	0.0	34.4	CS2		0	0	0	0	74	230	0	1	1	1
FAGA085	0.0	40.8	CS2	D	0	0	0	0	74	230	0	1	1	1
FAGA085	0.0	46.6	CS2		0	0	0	0	70	230	0	1	1	1
FAGA085	0.0	56.7	CS2		0	0	0	0	65	230	0	1	1	1
FAGA085	0.0	68.9	PS2		0	0	0	0	75	230	0	1	1	1
FAGA085	0.0	77.1	PS2		0	0	0	0	75	230	0	1	1	1
FAGA085	0.0	84.1	CS2		0	0	0	0	85	230	0	1	1	1
FAGA085	0.0	91.1	PS2		0	0	0	0	73	230	0	1	1	1
FAGA085	0.0	98.1	CS2		0	0	0	0	35	230	0	1	1	1
FAGA085	0.0	102.7	PS2		0	0	0	0	80	230	0	1	1	1
FAGA085	0.0	110.3	PS2		0	0	0	0	62	230	0	1	1	1
FAGA085	0.0	117.5	CS2		0	0	0	0	80	230	0	1	1	1
FAGA085	0.0	128.3	CS2		0	0	0	0	80	230	0	1	1	1
FAGA085	0.0	134.1	PS2		0	0	0	0	85	230	0	1	1	1
FAGA085	0.0	141.7	CS2		0	0	0	0	80	230	0	1	1	1
FAGA085	0.0	151.6	CS2		0	0	0	0	80	230	0	1	1	1
FAGA085	0.0	160.6	PS2		0	0	0	0	70	230	0	1	1	1
FAGA085	0.0	166.4	PS2		0	0	0	0	85	230	0	1	1	1
FAGA085	0.0	173.7	PS2		0	0	0	0	85	230	0	1	1	1
FAGA085	0.0	177.7	PS2		0	0	0	0	75	230	0	1	1	1
FAGA085	0.0	187.5	PS2		0	0	0	0	60	230	0	1	1	1
FAGA085	0.0	191.7	CS2		0	0	0	0	65	230	0	1	1	1
FAGA085	0.0	204.5	CS2		0	0	0	0	62	230	0	1	1	1
FAGA085	0.0	210.3	PS2		0	0	0	0	67	230	0	1	1	1
FAGA085	0.0	219.8	PS2		0	0	0	0	65	230	0	1	1	1
FAGA085	0.0	221.9	PS2		0	0	0	0	60	230	0	1	1	1
FAGA085	0.0	232.6	PS2		0	0	0	0	55	230	0	1	1	1
FAGA085	0.0	237.1	PS2		0	0	0	0	70	230	0	1	1	1
FAGA085	0.0	247.5	PS2		0	0	0	0	78	230	0	1	1	1
FAGA085	0.0	253.3	PS2		0	0	0	0	82	230	0	1	1	1
FAGA085	0.0	259.1	PS2		0	0	0	0	74	230	0	1	1	1
FAGA085	0.0	272.8	PS2		0	0	0	0	82	230	0	1	1	1
FAGA085	0.0	278.9	CS2	M	0	0	0	0	74	230	0	1	1	1
FAGA085	0.0	285.6	CS2	M	0	0	0	0	90	230	0	1	1	1
FAGA085	0.0	303.0	PS2		0	0	0	0	80	230	0	1	1	1
FAGA085	0.0	310.3	PS2		0	0	0	0	65	230	0	1	1	1
FAGA085	0.0	316.1	PS2		0	0	0	0	75	230	0	1	1	1
FAGA085	0.0	327.4	PS2		0	0	0	0	80	230	0	1	1	1
FAGA085	0.0	328.9	PS2		0	0	0	0	70	230	0	1	1	1
FAGA085	0.0	362.1	PS2		0	0	0	0	66	230	0	1	1	1
FAGA085	0.0	366.2	PS2		0	0	0	0	75	230	0	1	1	1
FAGA085	0.0	373.1	PS2		0	0	0	0	80	230	0	1	1	1
FAGA085	0.0	381.8	PS2		0	0	0	0	85	230	0	1	1	1
FAGA085	0.0	387.7	PS2		0	0	0	0	80	230	0	1	1	1
FAGA085	0.0	397.8	PS2		0	0	0	0	68	230	0	1	1	1
FAGA085	0.0	404.9	PS2		0	0	0	0	75	230	0	1	1	1
FAGA085	0.0	412.4	PS2		0	0	0	0	80	230	0	1	1	1
FAGA085	0.0	419.4	PS2		0	0	0	0	90	230	0	1	1	1
FAGA085	0.0	427.0	PS2		0	0	0	0	75	230	0	1	1	1
FAGA085	0.0	429.8	PS2		0	0	0	0	70	230	0	1	1	1

DDH: FAGA085 UTM-N: 905,134.8 UTM-E: 592,120.3 UTM-ELEV: 1,307.6 TOTAL DEPTH: 431.0 SECTION: W 82
RFE: S2 RFE DIR: 230 PLUNGE ANGLES: 11 312 DHD CALC: 1 SS CALC: 1

DDH	F DEPTH	T DEPTH	FEAT	REC CD	PARLL	UPPER PLANE		INTERNAL PLANE		LOWER PLANE		DHD
FAGA085	0.0	31.0	NNN			0	0	0	0	0	0	1
FAGA085	0.0	32.9	1G			0	0	99	999	0	0	1
FAGA085	35.5	37.1	P	8		0	0	0	0	0	0	1
FAGA085	0.0	42.6	1G			0	0	99	999	0	0	1
FAGA085	0.0	49.3	B1P			0	0	0	0	0	0	1
FAGA085	0.0	51.8	1G			0	0	0	0	0	0	1
FAGA085	0.0	52.5	1G			0	0	0	0	0	0	1
FAGA085	0.0	53.6	1G			0	0	99	999	0	0	1
FAGA085	54.2	55.1	BF?			0	0	0	0	0	0	1
FAGA085	60.1	60.6	B	7		0	0	0	0	0	0	1
FAGA085	60.6	61.8	G			0	0	0	0	0	0	1
FAGA085	61.8	63.3	B	5		0	0	0	0	0	0	1
FAGA085	0.0	63.3	G			0	0	0	0	0	0	1
FAGA085	63.3	65.6	3B	6		0	0	0	0	0	0	1
FAGA085	0.0	67.0	B			0	0	0	0	0	0	1
FAGA085	0.0	67.6	B			0	0	0	0	0	0	1
FAGA085	0.0	69.1	B			0	0	0	0	0	0	1
FAGA085	0.0	73.1	1G			0	0	0	0	0	0	1
FAGA085	0.0	73.3	1G			0	0	0	0	0	0	1
FAGA085	0.0	75.2	BP			0	0	0	0	0	0	1
FAGA085	0.0	78.0	B1G			0	0	0	0	0	0	1
FAGA085	79.8	83.5	BF?			0	0	0	0	0	0	1
FAGA085	94.1	95.0	G			0	0	0	0	0	0	1
FAGA085	121.6	122.5	B1G			0	0	0	0	0	0	1
FAGA085	156.6	160.3	B1G			0	0	0	0	0	0	1
FAGA085	181.0	181.3	G			99	999	99	999	99	999	1
FAGA085	217.1	219.3	NNN			0	0	0	0	0	0	1
FAGA085	223.8	224.4	BFQ			0	0	0	0	0	0	1
FAGA085	239.5	242.7	NNN			0	0	0	0	0	0	1
FAGA085	247.8	247.9	G			0	0	99	999	0	0	1
FAGA085	262.8	268.5	NNN			0	0	0	0	0	0	1
FAGA085	292.8	295.9	NNN			0	0	0	0	0	0	1
FAGA085	299.3	302.9	NNN			0	0	0	0	0	0	1
FAGA085	337.4	338.3	XFB			0	0	0	0	0	0	1
FAGA085	338.3	347.4	NNN			0	0	0	0	0	0	1
FAGA085	347.4	348.0	XBQ			0	0	0	0	0	0	1
FAGA085	348.0	352.3	NNN			0	0	0	0	0	0	1
FAGA085	356.9	357.0	NNN			0	0	0	0	0	0	1
FAGA085	360.5	361.1	NNN			0	0	0	0	0	0	1
FAGA085	361.1	367.7	B			0	0	0	0	0	0	1
FAGA085	391.5	392.4	NNN			0	0	0	0	0	0	1
FAGA085	393.4	395.3	NNN			0	0	0	0	0	0	1

DDH: FAGA085 UTM-N: 905,154.8 UTM-E: 592,120.3 UTM-ELEV: 1,307.6 TOTAL DEPTH: 431.0 SECTION: W 82
RFE: S2 RFE DIR: 230 PLUNGE ANGLES: 11 312 DHD CALC: 1 SS CALC: 1

DDH	SEGMENT NOS	COND INDICATOR
FAGA085	1	2
FAGA085	2	2
FAGA085	3	2
FAGA085	4	2
FAGA085	5	2
FAGA085	6	2
FAGA085	7	2
FAGA035	8	1

82W

CYPRUS ANVIL MINING CORPORATION

Page 1 of 13

DIAMOND DRILL CORE LOG

Date: 25 July 1982

Hole Number: FAG A085

Project: GRUM

Location: VANGORDA PLATEAU 105K3

Claim: GRUM 3

Terr.Plane Co-ords.: 905154.8 N

transform Kerr-Addison grid coordinates

592120.3 E

Grid Co-ords: 4N

82W

K-A elev -10.61

Elevation: 1307.6 m (CAMC)

Total Depth: 1414' (431.0 m)

Purpose: to test ore

Reason hole Terminated: tested ore but short hole

Logged by: DSJ/GAJ

Date(s) Logged: 26 & 27 June 82

Drilling Contractor: Cameron MacCutcheon

Hole Cemented: yes

Steel down hole: no

Reference Fabric Orientation Diagram:

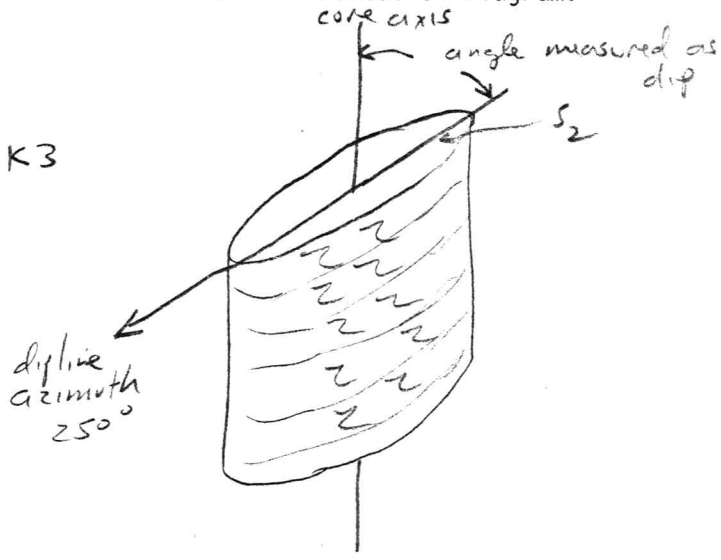

All symmetry determinations looking

NW with S_2 dipping

SW with dip azimuth 250. WAS (in 1982) → 225 below 150m

this now changed to 230° for entire hole

Size	CORE From	To
BW	0'	100'
BQ	100'	1414'

Collar Cased and Capped: no

Started: 13 June 75 Completed: 26 June 75

C.A.M.C. 1981 - E - 1

note on assay log
KA interval and recovery needed
CAMC recovery from KA needed

Cyprus Anvil Mining Corp.

DDH FAGA085 (2–8)

Diamond Drill Core Log Date: 25July82 Logged By: DSJ/GAJ/DJH (this page)

Code	Drillhole	Elevation	Northing	Easting	Units (feet/metres)	R.F.E.	
	2 8	10 16	17 24	25 32	34 39	41 42	
T	FAGA085	13076	9051548	5921203	FEET	SZ	

Code	Drillhole	Depth	Zenith Angle	True Azimuth	Comments
	2 8	10 14	22 26	28 32	34 56
R	FAGA085	0	180.0	0.0	AT COLLAR
R	FAGA085	200	177.5	079.0	BY SPERRY SUN
R	FAGA085	400	174.0	107.0	
R	FAGA085	600	173.0	106.0	
R	FAGA085	800	173.2	138.0	
R	FAGA085	1000	172.2	183.0	
R	FAGA085	1260	172.4	183.0	
R	FAGA085	1320	172.2	183.0	

Code	Drillhole	Comments, Errant Remarks, Snivellings and / or Lewd Suggestions
	2 8	10 56

DDH FAGA085 (FEET)

Cyprus Anvil Mining Corp.

Lithologic Log

Date: 26 June 82 Logged By: DSJ/GJ/MM

Code	From	To	Recov.	No.	Unit	Description
1	10 14	16 20	22 24	26 28	30 34	35
L	0	200		1	*	overburden
L	200	1020		2	*	bedrock not coced according to F. Chow
L	1020	1165		3	5B80	minor S_2 foliaform gouge near 108.
L	1165	1220		4	5D0	core lose approx .5 ft
L	1220	1310		5	5B80	[5B0±8]
L	1310	1335		6	5D0	
L	1335	1975		7	5B80	[5B0±8] (5D0) minor S_2 foliaform gouge at 140, broken core, minor gouge + core loss at 162 possible fault 178 to 181 zone of OQO mainly broken but no gouge minor // S_2 gouge at 176 + 170 + 172.5 end of interval marked by broken OQO + minor core loss there
L	1975	1990		8	5D0	30% core loss, broken core
L	1990	2030		9	5B80	Gouge
L	2030	2080		10	5B80	core broken, 50% recovery indeterminate gouge at base
L	2080	2125		11	5D0	60% core recovery, badly broken core in general
L	2125	2145		12	5B0	±2, ±8
L	2145	2160		13	5D0	
L	2160	2480		14	5B0	(5B80) broken core, minor core loss near 220 + 222, 237, minor indeterminate gouge at 240 + 240.5 240 240.2
L	2480	3090		15	5D0	±* * = ankerite, core broken near 247 minor core loss assumed 1 ft broken core + very minor indeter. gouge near 256, cor mod. broken + rusty weathering 262 to 274 no major core loss, some evidence of steeply dipping fault zone, making core ∠ 25° but major displacement unlikely, unit contains minor 5A6 in beds near 273 + has well developed lithon structure between 275 + 300 mgg. of pos. 5B8 slight gray tinge to foliation surfaces.

DDH FA6A085 (2 8) Cyprus Anvil Mining Corp. Page 24 of 13

Lithologic Log Date 26 June 82 Logged By: DSJ/GJ/MM

Code	From	To	Recov.	No.	Unit	Description
1	10 14	16 20	22 24	26 28	30 34	35
L	3090	3120		16	5B	gouge, upper contact is fault dipping 45°, lower contact marked by S2 foliaform QQQ but indeterm. attitude internal gouge sub-horizontal // S2 above + below gouge zone
L	3120	3450		17	5B9	± B, ± 2 (MostHy −),
L	3450	3810		18	5B0	
L	3810	3850		19	5D0	(5B80) 50:50
L	3850	4800		20	5B0	(5B80) (5B20) (5D0), 399 to 402 core broken, minor indeterminate gouge + core loss, remainder of unit unbroken, most carbonaceous rock in last 5ft
L	4800	4815		21	5E0	
L	4815	5450		22	5B0	± B (5D0) ± 2 towards top core broken 514 to 526, no major core loss, minor gouge near 521 + 526 both indeterminate, remainder unit intact
L	5450	5470		23	5D0	
L	5470	5655		24	5B0	(5D0) 80:20
L	5655	5720		25	5D*	± 0, minor gray sed. elements, any interbands.
L	5720	5940		26	5B62	(5B62*) ankerite + / or dolo could be considered 5A*, similar to dolomitic marker at base of Vangorda
L	5940	5950		27	5B62	entirely gouged, contacts appear // S2 but uncertain, internal gouge appears // S2
L	5950	6060		28	4A4	(4A34)
L	6060	6100		29	4C0	
L	6100	6110		30	5D*	(4D)
L	6110	6130		31	4A4	
L	6130	6145		32	5D4*	4C0 fuchsite bearing

C.A.M.C. 1981 – E-3

DDH FAGA085 (2–8) Cyprus Anvil Mining Corp. Page 5 of 13

Lithologic Log Date: 26 June 82 Logged By: DSJ/GJ/HM

Code	From	To	Recov.	No.	Unit	Description
1	10–14	16–20	22–24	26–28	30–34	35
L	6145	6460		33	4A0	(5A19)
L	6460	6570		34	4C0	(5D) 8" of 5D at 6H9
L	6570	6890		35	4C5	(5D4*) 95:5, 5D occurs as
						thin interbands ranging from
						2 to 15cm in thickness,
L	6890	7125		36	4C0	(5D4*) 95:5, 5D is fuchite
						bearing + occurs in bands
						down to 1cm in thickness
L	7125	7195		37	4D0	core missing interp. from K-A log
L	7195	7345		38	3G0	[5D4]
L	7345	7365		39	3G0	(OQ*) unit entirely broken, prob
						fault zone OQ* is brecciated
						+ carries pyrite + traces of
						calco-pyrite
L	7365	7485		40	4C5	(4D5) 70:30
L	7485	7560		41	4D5	
L	7560	7860		42	4C5	well dev. phyllitic parting toward base
L	7860	7965		43	4D5	core missing interp K-A log
L	7965	8075		44	4C5	
L	8075	8100		45	4C0	last few inches is grad thru
						4C5 to 3G9
L	8100	8130		46	3G9	(3B3)
L	8130	8135		47	3G0	gouge appears $\parallel s_2$
L	8135	8160		48	5D*	dolo base appears gradational
						into underlying unit
L	8160	8265		49	3B3	(3G9) "calc-silicaty", 3B3
						is biotite bearing
L	8265	8440		50	3G9	
L	8440	8465		51	4L0	
L	8465	8625		52	4C0	(5D*) 97:3 5D contains minor
						fuchite + occurs in thin interbands
						randomly thru out core, suspect
						unit may have been 4C5 over
						printed by 4L type alterations
						because of gradational downward
						increase in intensity of 4L dev. in
						overlying unit

DDH EAGA085 (2 / 8) Cyprus Anvil Mining Corp. Page 6 of 13

Lithologic Log Date: 26 June 82 Logged By: DSI/GA/MA/DC

Code	From	To	Recov.	No.	Unit	Description
1	10 14	16 20	22 24	26 28	30 34	35
L	8625	8810		53	4A4	interp from K-A log, core miss. abundance of graphitic chips in core + assay make this definitely 4A4
L	8810	8880		54	4A0	
L	8880	8980		55	4C0	(SD*)(SC*) latter is thin bands
L	8980	9110		56	4A0	minor 4A4 from 899 to 901 4910-911
L	9110	9240		57	4A30	pyrite rich, appears to be thin unit running down drill core axis
L	9240	9380		58	4A0	layering vertical thru much of unit
L	9380	9470		59	4A0	(4L0±7)(5D*4), 5D appears to be going to 4L but minor fuch. rk remains in places
L	9470	9608		60	4A0	±3 9
L	9608	9710		61	4A4	No Core Int'd from K.A. log
L	9710	9820		62	4A0	Monotonously homo & low grade
L	9820	9940		63	4A4	Core Missing Interp. from K.A log ~~Also interp from K-A log is a downward facing cycle~~
L	9940	9980		64	4A0	
L	9980	10100		65	4E4	[4I]
L	10000	10050		66	4G4	(4E46) Very Baritic at Base. LAST 3 units appear to be a downward facing cycle
L	10050	10055		67	5D4*	
L	10055	10270		68	5A0*	(5D0) * = Dolomite Unit is a conspicuously lt & dark grade interbanding of dolomitic siltstone & carbonaceous pelite
L	10270	10275		69	5D0	
L	10275	10530		70	5A0*	* = Dolomite As Unit #67
L	10530	10540		71	5D0	
L	10540	10590		72	5A0*	* = Dolo As #67

DDH F.A.G.A.0.8.5 (2–8)

Cyprus Anvil Mining Corp.

Lithologic Log

Date: 16 June 82 Logged By: DSI/GJ/AM/DC

Code	From	To	Recov.	No.	Unit	Description
1	10 14	16 20	22 24	26 28	30 34	35
L	10590	10780		73	5A6	(3G9) Unit becomes lighter coloured downwards and seems rich in lt. silty bands which do not fizz under any conditions.
L	10780	11070		74	5A0*	* = DOLO (5A6) [3G9, not black throughout]
L	11070	11100		75	3G0	Breccia - indicates fault zone but core is too broken to determine attitude.
L	11100	11175		76	4D4	Interp. from K.A. log
L	11175	11185		77	5D4*	Interp. from K.A. log
L	11185	11400		78	4D43	Core missing. Interp from K.A. log
L	11400	11420		79	5D4*	(0Q*) Breccia - Core badly broken but all surrounding sections pirated so you can't get the contact. c̄ the surrounding Breccia.
L	11420	11560		80	4D43	Core missing Interp. from K.A. log
L	11560	11712		81	4E0	(4E4) Proportions 90/10
L	11712	11745		82	4D44	5 Core missing Interp from K.A. log
L	11745	11830		83	4D44	5
L	11830	11850		84	4D0	Core missing Interp from K.A. log
L	11850	12065		85	3G9	(0Q*) Core broken but normal recovery: No gouge. Minor pyritite in Sz parallel veins
L	12065	12115		86	4L57	(4L14) [From 5D4* and 4C ??)
L	12115	12160		87	3G9	(4L3) - towards base of the unit.
L	12160	12190		88	3G93	Med. Grey.
L	12190	12250		89	4L0	±7
L	12250	12730		90	3G93	* Transitional to 5A0* But really not black enough for 5A0 Contains minor pyritite in the calc.-quartz bands. Lt. bands also carry. Ankerite Unit contains good lithon structure but not really very similar to 5B2
L	12730	12790		91	4L0	±4 ±9 ±6 Derived from 5D4* ?
L	12790	12820		92	5A6	±2

DDH F A 6 A 0 8 5 (2–8)

Cyprus Anvil Mining Corp.

Lithologic Log

Date: 26 JUNE 82 Logged By: DSJ/GJ

Code	From	To	Recov.	No.	Unit	Description
1	10–14	16–20	22–24	26–28	30–34	35
L	1282 0	1284 5		93	4A01	
L	1284 5	1287 5		94	4E47	Core Missing. Interp from K.A. log
L	1287 5	1291 0		A5	4C01	Transitional to 4L14
L	1291 0	1297 0		96	4E41	Core Missing Int. from K.A. log
L	1297 0	1312 9		97	5A169	(4A0) Minor. Both pyrite & Po. (4C5)
L	1312 9	1314 6		98	4E80	
L	1314 6	1323 0		99	4L73	±1
L	1323 0	1374 5		100	4L679	Probably derived from 360±9E3 "calc. sil." Note pyritite occurs in thin stringers deformed by D2. Typically associated with chlorite, quartz, and Ankerite
L	1374 5	1396 0		101	4L73	1 (500'[383]) There are trace amounts of calco.-pyrite
L	1396 0	1414 0		102	5A110	±9 (506 biotitic) Only Weakly Calc. and is hard (siliceous throughout) -Sulphides are pyrite and even some trace sphalerite 1414 = EOH

DDH F.A.G.A.0.8.5 (2 / 8) Cyprus Anvil Mining Corp. Page 9 of 13

Feet. Structural Log Date: June 27/82 Logged By: GJ

Code	From	To	Feature	Sym	S_0 Dip Direct.	S_1 Dip Direct.	S_2 Dip Direct	Description
	10 14	16 20	22 24	26	28 32	34 38	40 44	
S		1130	CS2				74 250	
S		1340	1ND	D			74 250	
S		1530	CS2				70	
S		1860	CS2				65	
S		2260	1ND	P			75	
S		2530	1ND	P			75	
S		2760	CS2				85	
S		2990	1ND	P			73	
S		3120	CS2				85	
S		3370	1ND	P			80	
S		3620	1ND	P			62	
S		3855	CS2				80	
S		4210	CS2				80	
S		4400	1ND	P			85	
S		4650	CS2				80 212.5	
S		4975	CS2				80	
S		5270	1ND	P			70	
S		5460	1ND	P			85	
S		5700	1ND	P			85	
S		5830	1ND	P			75	
S		6150	1ND	P			60	
S		6290	CS2				65	
S		6710	CS2				62	
S		6910	1ND	P			67	
S		7210	1ND	P			65	
S		7280	1ND	P			60	
S		7630	1ND	P			55	
S		7780	1ND	P			70	
S		8120	1ND	P			78	
S		8310	1ND	P			82	
S		8500	1ND	P			74	
S		8950	1ND	P			82	
S		9150	CS2	M			74	
S		9370	CS2	M			90	
S		9940	1ND	P			80	
S		10180	1ND	P			65	

C.A.M.C. 1981 - E - 4

DDH F.AG.A.085 (2 / 8) Cyprus Anvil Mining Corp. Page 10 of 13

Structural Log Date: JUNE 27/82 Logged By: G.J

Code	From	To	Feature	Sys	S_0 Dip Direct.	S_1 Dip Direct.	S_2 Dip Direct	Description
1	10 14	16 20	22 24	26	28 32	34 38	40 44	
S		10370	INID	P			75 225	
S		10740	INID	P			80	
S		10790	INID	P			70	
S		11880	INID	P			66	
S		12015	INID	P			75	
S		12240	INID	P			80	
S		12525	INID	P			85	
S		12720	INID	P			80	
S		13050	INID	P			68	
S		13285	INID	P			75	
S		13530	INID	P			80	
S		13760	INID	P			90	
S		14010	INID	P			75	
S		14100	INID	P			70	

C.A.M.C. 1981 - E - 4

DDH EAGA-085 Cyprus Anvil Mining Corp

Page 11 of 13

FEET

ASSAY LOG (SAMPLER'S COPY) Date _____ Logged by _____ Sampled by _____

CODE	FROM	TO	SAMPLE	INTR.	REC (m)	UNIT	DESCRIPTION
	10 14	16 20	22 26	28 30	32 34	36 40	42
P	595 0	606 0	125779	10 0	9 0	4A4	
P	6060	6150	1215810	140	136	4CP	
P	6100	6145	125811	145	141	4A4	(SD*) (4DD) (4CO)
P	6145	6210	125812	65	58	4A0	(SA19)
P	6210	6270	125813	60	60	4AP	(SA19)
P	6270	6330	125814	60	60	4A0	(SA19)
P	6330	6400	125815	70	70	4A0	(SA19)
P	6410	6460	125816	60	60	4A0	(SA19)
P	6416	6525	904114	65	65	4CP	part of KA 1946
P	6525	6625	904115	100	100	4CP	4C5 1947
P	6625	6725	904116	100	100	4C5	(SD4*) 1948
P	6725	6825	904117	100	100	4C5	(SD4*) 1949
P	6825	6925	904118	100	100	4C5	(4CO) 1950
P	6925	7025	904119	100	100	4C0	(SD4*) 1951
P	7025	7125	904120	100	90	4CP	(SD4*) 1952
P	7125	7180	904121	55	50	4DD	(SD4*) (4CO) 1953
P	7215	7280	904122	65	60	3GD	(OO*) 1954
P	7280	7365	904123	85	45	3G0	(OO*) most of 1955
P	7365	7395	125817	60	56	4C5	
P	7395	7485	125818	60	66	4C5	
P	7485	7560	125819	75	70	4D5	
P	7560	7620	125910	60	60	4C5	
P	7620	7680	125911	60	60	4C5	
P	7680	7740	125912	60	60	4C5	
P	7740	7800	125913	60	60	4C5	
P	7800	7860	125914	60	60	4C5	
P	7860	7965	904149	105	105	4D5	KA#1962
P	7965	8025	125915	60	60	4C5	
P	8025	8075	125916	50	50	4C5	
P	8075	8100	125917	25	25	4C0	
P	8165	8255	904124	100	100	4C0	(SD*) KA#1965
P	8255	8620	904125	55	55	4C0	(SD*) 1966
P	8620	8682	904126	62	62	4A4	1967
P	8682	8733	904127	51	51	4A4	1968
P	8733	8811	904128	78	78	4A4	1969

C.A.M.C. 1981 - E - 5

Note: recoveries taken from Kerr Addison logs.

DDH FAGA085 (2 / 8) Cyprus Anvil Mining Corp

Logged by GJ DSJ

ASSAY LOG (SAMPLER'S COPY) Date 28 June Sampled by

CODE	FROM	TO	SAMPLE	INTR.	REC (m)	UNIT	DESCRIPTION
	10 14	16 20	22 26	28 30	32 34	36 40	42
P	8 8 1 1	8 8 7 8	9 0 H 2 9	1 6 7	1 6 7	4 A 0 1	KA 1970
P	8 8 7 8	8 9 7 5	9 0 4 3 1 0	1 9 7	1 9 7	4 C 0 1	(5C*)(5D*)(4A4) " 1971
P	8 9 7 5	9 1 1 0	9 0 4 3 1	1 3 5	1 2 8	4 A 0 1	" 1972
P	9 2 H	9 3 H	9 0 4 3 2	1 0 0	8 0	H A 3 0	" 1975
P	9 4 7 0	9 5 4 0	1 2 5 9 8	1 7 0	1 6 6	4 A 0 1	±3 ±9
P	9 5 4 0	9 6 0 8	1 2 5 9 9	1 6 8	1 6 8	4 A 0 1	±3 ±9
P	9 6 0 8	9 7 1 0	9 0 4 3 3	1 0 3	1 0 0	4 A 4 1	KA #1980
P	9 7 1 0	9 8 2 0	1 2 6 0 0	1 1 0	1 0 0	4 A 0 1	
P	9 8 2 0	9 9 3 5	9 0 4 3 4	1 1 5	1 1 0	H A 4 1	KA #1982
P	9 9 3 5	9 9 8 1	1 2 6 0 1	1 4 6	4 6	4 A 0 1	
P	9 9 8 1	1 0 0 4 8	1 2 6 0 2	1 6 7	1 6 7	4 G 4 1	(4E46)(4E4)
P	1 1 0 9 2	1 1 1 8 3	9 0 4 3 5	1 9 1	1 9 1	4 D 4 1	(5D4*) KA #1985
P	1 1 1 8 3	1 1 2 8 0	9 0 4 3 6	1 9 7	1 9 7	4 D 4 3	" 1986
P	1 1 2 8 0	1 1 3 6 0	9 0 4 3 7	1 8 0	1 8 0	4 D 4 3	" 1987
P	1 1 3 6 0	1 1 4 0 0	9 0 4 3 8	1 4 0	1 4 0	4 D 4 3	" 1988
P	1 1 4 2 0	1 1 5 2 0	9 0 4 3 9	1 0 0	1 0 0	4 D 4 3	" 1989
P	1 1 5 2 0	1 1 5 6 0	9 0 4 4 0	1 4 0	1 4 0	4 E 0 1	" 1990
P	1 1 5 6 0	1 1 6 4 0	1 2 6 0 3	1 8 0	1 8 0	4 E 0 1	(4E4)
P	1 1 6 4 0	1 1 7 1 2	1 2 6 0 4	1 7 2	1 6 5	4 E 0 1	(4E4)
P	1 1 7 1 2	1 1 7 4 0	9 0 4 4 1	1 2 8	1 2 0	4 D 4 5	4 KA 1994
P	1 1 7 4 0	1 1 7 9 0	1 2 6 0 5	1 5 0	1 4 7	4 D 4 5	4
P	1 1 7 9 0	1 1 8 3 0	1 2 6 0 6	1 4 0	1 3 8	4 D 4 5	4
P	1 1 8 3 0	1 1 8 6 5	9 0 4 4 2	1 3 5	1 3 5	4 D 0 1	KA #1996
P	1 2 0 2 5	1 2 0 9 0	9 0 4 4 3	1 6 5	1 6 5	4 L 5 7	(4L14)(3G9)(00*) KA #1997
P	1 2 0 9 0	1 2 1 1 0	9 0 4 4 4	1 2 0	1 2 0	4 L 5 7	(4L14) 1998
P	1 2 8 2 0	1 2 8 4 6	9 0 4 4 5	1 2 6	1 2 6	4 A 0 1	KA #1999
P	1 2 8 4 6	1 2 8 7 5	9 0 4 4 6	1 2 9	1 2 9	4 E 4 7	" 2000
P	1 2 8 7 5	1 2 9 0 9	1 2 6 0 7	1 3 4	1 3 4	4 C 0 1	
P	1 2 9 0 9	1 2 9 6 5	9 0 4 4 7	1 5 6	1 5 6	4 E 4 1	Precuy as error on KA log. " 2302
P	1 3 1 2 9	1 3 1 4 6	9 0 4 4 8	1 2 7	1 2 6	4 E 8 1 0	(4C5) " 2303

DDH FAG.A.085 (2 FEET 8) Cyprus Anvil Mining Corp. Page 13 of 13

Research Samples Date: 25 June Sampled By: GJ

Code	From	To	No.	Unit	Purpose
1	10 14	16 20	22 24	26 30	
H	642.5	652.5		4C0	Assay for gold - unit contains
					notable arsenopyrite and low total S-
					KA assay # 1946 our 90414
H	692.5	702.5		4C0	" KA tag # 1951 our 90419
					Should consider the entire interval
					642.5 – 712.5 for Au assay

C.A.M.C. 1981 - E - 6

DDH EAGA085 (2 / 8) Cyprus Anvil Mining Corp. Page ____ of ____

Structural Log Date: ____ Logged By: ____

Code	From	To	Feature	Sym	S_0 Dip Direct.	S_1 Dip Direct.	S_2 Dip Direct	Description
1	10 14	16 20	22 24	26	28 32	34 38	40 44	
	1210	1020	N N N					
		1108	I G			$1/S_2$		
	1165	1220	P	8				
		1410	I G			$1/S_2$		
		162	B I P					
	178	181	B F ?					
		176	I G			$1/S_2$		
		170	I G					
		1725	I G					
	1975	1990	B	7				
	1990	2030	G					
	2030	2080	B	5				
		2080	G					
	208	2155	3 B	6				
		2210	B					
		2232	B					
		2327	B					
		240	I G					
		2405	I G					
		2470	B P					
		2516	B N G					
	262	274	B F ?					steep
	3009	3112	G					
	3919	4012	B I G					
	5114	5216	B I G					
	5944	5955	G		$1/S_2$	$1/S_2$	$1/S_2$	
	7125	7195	N N N					
	7345	7365	B F P					
	786	7965	N N N					
	8113	8135	G			$1/S_2$		
	8625	881	N N N					
	9608	9710	N N N					
	982	9940	N N N					
	11078	11100	X F B					
	11100	11400	N N N					
	11400	11429	X B P					

DDH FAGA085 (2 / 8)

Cyprus Anvil Mining Corp.

Structural Log

Page _____ of _____

Date: _____ Logged By: _____

Code	From	To	Feature	Sym	S_0 Dip Direct.	S_1 Dip Direct.	S_2 Dip Direct	Description
1	10 14	16 20	22 24	26	28 32	34 38	40 44	
	1142 0	1156 0	NNN					
	1171 2	1174	NNN					
	1183	1185 0	NNN					
	1185	1206 5	B					
	1284 5	1287 5	NNN					
	1291 0	1297 0	NNN					

C.A.M.C. 1981 - E - 4

FAGA087

DRILL HOLE : FAGA087

NORTHING : 905,199.0

EASTING : 592,161.3

ELEVATION : 1,305.0

TOTAL DEPTH : 426.4

SECTION : W 82

R.F.E. : S2

RFE DIRECTION: 230

PLUNGE ANGLE : 11

PLUNGE DIRECT: 312

DHD CALC: 1

SS CALC: 1

DETAIL RECORD COUNTS:

NOS ORE-SAMPLES: 54

NOS DOWN-H-SURVEYS: 6

NOS DOWN-H-LITHOLOGY: 118

NOS DOWN-H-STRUCTURE: 62

NOS DOWN-H-FAULTS: 31

NOS DOWN-H-SPLINES: 6

NOS COMPOSITES: 0

DDH: FAGA087 UTM-N: 905,199.0 UTM-E: 592,161.3 UTM-ELEV: 1,305.0 TOTAL DEPTH: 426.4 SECTION: W 82
RFE: S2 RFE DIR: 230 PLUNGE ANGLES: 11 312 DHD CALC: 1 SS CALC: 1

DEPTHS FROM	DEPTHS TO	SAMPLE NO.	INT.	REC.	ROCK UNIT	ASSAYS S.G. PULP	CU %	PB %	ZN %	AG(AA) G/MT	AG(FA) G/MT	AU(FA) G/MT	PO %	PY %	TOT FE	BAO %	HG %	MN %	AS %	BA %	S.G. W.R.
163.6	165.0	90390	1.4	1.4	4D4			5.37	9.26	81.59											
165.0	165.7	90391	.7	.6	4D4			4.34	5.59	70.59											
165.7	166.4	90392	.7	.7	4A4			2.93	3.12	45.29											
171.0	172.2	12501	1.2	.9	4A0	3.14	.02	1.54	3.06	27.00		.47	1	10	11						
172.2	173.7	12502	1.5	1.4	4A0	2.89	.05	1.04	1.22	17.00		.34		3	4						
173.7	175.3	12503	1.6	1.6	4A0		.08	.45	.80	10.00											
175.3	176.3	12504	1.0	1.0	4A0		.11	.59	1.06	12.00											
178.7	179.6	90393	.9	.9	4A4			3.45	5.63	55.49											
183.0	184.0	12505	1.0	1.0	4C5	3.47	.08	1.28	1.94	22.00		.40	2	17	19						
184.0	185.7	12506	1.7	1.7	4A0	3.20	.05	1.40	2.04	26.00		.34	2	10	13						
189.3	191.1	12507	1.8	1.8	4C5	3.08	.08	1.81	2.56	27.99		.55	2	6	8						
191.1	192.8	12508	1.7	1.6	4C5	2.91	.05	1.58	1.58	21.00		.40	1	4	5						
192.8	194.4	12509	1.6	1.6	4C5	3.02	.08	1.32	1.65	25.00		.68	1	6	8						
194.4	196.0	12510	1.6	1.6	4C5	2.89	.04	1.22	.93	19.00		.07		3	4						
196.0	197.7	12511	1.7	1.6	4C5		.02	.88	.63	12.00											
197.7	199.2	12512	1.5	1.5	4C5		.02	.95	.86	13.99											
199.2	202.2	90394	3.0	2.9	4D5			3.00	4.25	41.50											
202.2	203.0	90395	.8	.8	4D5			1.99	2.22	26.39											
203.0	206.0	90396	3.0	3.0	4D5			3.08	3.89	43.50											
206.0	207.6	12513	1.6	1.5	4C0	2.85	.02	1.07	1.86	17.00		.34	1		1						
207.6	209.1	12514	1.5	1.5	4C0	2.91	.04	1.50	3.29	27.99		.34	1		2						
209.1	210.6	12515	1.5	1.5	4C0	2.87	.02	1.16	2.27	22.00		.68			1						
210.6	212.1	12516	1.5	1.5	4C0	2.91	.04	1.32	2.33	23.00		.34	1	2	3						
212.1	213.7	12517	1.6	1.5	4C0	2.87	.04	1.33	2.81	23.00		.27	1	1	2						
213.7	215.2	12518	1.5	1.5	4C0	2.87	.02	1.24	2.37	21.00		.68		1	2						
215.2	216.7	12519	1.5	1.5	4C0	2.95	.02	1.52	3.43	28.99		.81		3	4						
216.7	218.2	12520	1.5	1.5	4C0	3.04	.02	1.08	1.83	21.00		.62	1	4	6						
218.2	219.9	12521	1.7	1.6	4C0	2.99	.02	1.38	3.06	27.99		.62	1	5	6						
219.9	222.8	90397	2.9	2.9	4D0			3.89	3.47	75.79											
222.8	225.7	90398	2.9	2.9	4D0			2.37	6.66	42.50											
229.8	232.0	90399	2.2	2.1	4D4			4.20	8.35	75.79											
232.0	233.5	90400	1.5	1.5	4D0			2.08	7.25	45.29											
237.3	239.3	90401	2.0	1.9	4E4			7.33	14.53	112.40											
239.3	240.4	12522	1.1	1.1	4A1		.07	.38	1.77	14.99											
249.2	250.5	12523	1.3	1.3	4A4	3.08	.05	3.81	4.28	68.00		1.16	1	6	7						
313.6	315.0	12524	1.4	1.3	4A0	3.14	.07	1.29	2.02	21.00		.68	1	10	12						
315.0	315.5	12525	.5	.5	4G4	4.46	.05	6.00	11.09	100.00		1.30	1	20	21						
315.5	317.6	12526	2.1	2.1	4A0		.16	.66	.81	13.99											
317.6	319.4	90402	1.8	1.8	4GE4			4.13	6.15	82.59											
319.4	320.9	90403	1.5	1.4	4GE4			4.79	7.70	111.09											
320.9	322.6	90404	1.7	1.7	4GE			3.14	5.16	52.39											
322.6	323.0	90405	.4	.3	4E0			2.77	.49	50.39											

DDH: FAGA087 UTM-N: 905,199.0 UTM-E: 592,161.3 UTM-ELEV: 1,305.0 TOTAL DEPTH: 426.4 SECTION: W 82
RFE: S2 RFE DIR: 230 PLUNGE ANGLES: 11 312 DHO CALC: 1 SS CALC: 1

DEPTHS FROM	DEPTHS TO	SAMPLE NO.	INT.	REC.	ROCK UNIT	ASSAYS S.G. PULP	CU %	PB %	ZN %	AG(AA) G/MT	AG(FA) G/MT	AU(FA) G/MT	PO %	PY %	TOT FE	BAO %	HG %	MN %	AS %	BA %	S.G. W.R.
324.1	326.9	90407	2.8	2.8	4G4			4.28	5.28	71.70											
326.9	327.5	90408	.6	.6	4E0			.72	.28	21.30											
328.8	330.6	90409	1.8	1.7	4A4			5.71	6.48	85.70											
330.6	331.9	90410	1.3	1.3	4GE4			4.58	7.67	72.70											
331.9	335.0	90411	3.1	3.0	4GE4			4.73	8.48	85.70											
335.0	337.0	90412	2.0	1.9	4A34			4.65	10.07	95.59											
337.0	337.6	90413	.6	.6	4AL			.75	1.41	14.09											
347.7	349.4	12527	1.7	1.6	4A0	3.47	.14	1.19	1.99	33.00		.40	3	17	21						
349.4	350.2	12528	.8	.8	4C3	3.56	.53	1.72	2.87	47.00		.47	6	16	22						
351.2	351.7	12529	.5	.5	4E4		.17	3.08	2.72	44.00											
394.4	395.5	12530	1.1	1.1	4H4	3.56	.16	6.09	8.90	55.00		.27	11	7	18						
WEIGHTED AVERAGE																					
163.6	166.4		2.8	2.7				4.50	6.80	69.77											
171.0	176.3		5.3	4.9		1.53	.06	.89	1.48	16.20		.20		3	3						
176.7	179.6		.9	.9				3.45	5.63	55.49											
183.0	185.7		2.7	2.7		3.30	.06	1.36	2.01	24.51		.36	2	13	15						
189.3	225.7		36.4	35.8		1.66	.02	1.89	2.91	31.44		.27		1	2						
229.8	233.5		3.7	3.6				3.34	7.91	63.43											
237.3	240.4		3.1	3.0			.02	4.86	10.00	77.83											
249.2	250.5		1.3	1.3		3.08	.05	3.81	4.28	68.00		1.16	1	6	7						
313.6	323.0		9.4	9.1		.70	.04	2.90	4.43	56.74		.17		2	2						
323.7	327.5		3.8	3.8				3.28	3.93	56.63											
328.8	337.6		8.8	8.5				4.61	7.83	81.14											
347.7	350.2		2.5	2.4		3.50	.26	1.36	2.27	37.48		.43	4	17	21						
351.2	351.7		.5	.5			.17	3.08	2.72	44.00											
394.4	395.5		1.1	1.1		3.56	.16	6.09	8.90	55.00		.27	11	7	18						

DDH: FAGA087 UTM-N: 905,199.0 UTM-E: 592,161.3 UTM-ELEV: 1,305.0 TOTAL DEPTH: 426.4 SECTION: W 82
RFE: S2 RFE DIR: 230 PLUNGE ANGLES: 11 312 DHD CALC: 1 SS CALC: 1

DEPTH	ZENITH	AZIMUTH
0.000	180.000	0.000
121.900	171.400	133.000
176.800	170.000	138.000
243.800	173.000	129.000
304.500	172.200	155.000
353.600	171.000	158.000

DDH: FAGA087 UTM-N: 905,199.0 UTM-E: 592,161.3 UTM-ELEV: 1,305.0 TOTAL DEPTH: 426.4 SECTION: W 82
RFE: S2 RFE DIR: 230 PLUNGE ANGLES: 11 312 DHD CALC: 1 SS CALC: 1

DEPTH	UNIT	CODE	DESC	RECOVERY	IND
9.8	0001	#		0.5-	1
16.8	0002	5B0		0.5-	1
23.9	0003	5D0		0.5-	1
26.4	0004	5B0		0.5-	1
28.3	0005	5D0		0.5-	1
35.9	0006	5B0		0.5-	1
37.1	0007	5D0	(10Q#)	0.5-	1
37.9	0008	5B0	(588)	0.5-	1
45.4	0009	5D0		0.5-	1
55.0	0010	5B0	(583) 50:50	0.5-	1
59.6	0011	5D0	(5862) 90:10	0.5-	1
60.6	0012	5B6$	(5D0) 80:20	0.5-	1
61.4	0013	5D0		0.5-	1
63.3	0014	58$	&3	0.5-	1
67.1	0015	5B0	(5D0)	0.5-	1
68.8	0016	5D0	&3	0.5-	1
71.3	0017	5B3	&8	0.5-	1
74.6	0018	5D0	&3	0.5-	1
75.0	0019	5B0		0.5-	1
75.7	0020	5D0		0.5-	1
83.2	0021	5B0	(5D0) 90:10	0.5-	1
93.1	0022	5D0	&3 (5B0 &8)(5B20) 90:10:TRACE	0.5-	1
104.0	0023	5B0	&2	0.5-	1
114.5	0024	5B3	&8	0.5-	1
116.2	0025	5D3	(5B20) 90:10	0.5-	1
119.5	0026	5B0		0.5-	1
122.0	0027	5B0		0.5-	1
136.6	0028	5B0	(5B8)(5B$)	0.5-	1
138.5	0029	5B20		0.5-	1
144.6	0030	5B8	(5D0 &3) 50:50	0.5-	1
146.3	0031	5B2		0.5-	1
148.7	0032	5B8		0.5-	1
153.9	0033	5D0	(5B8) 50:50	0.5-	1
156.8	0034	5B8	(5B2)(5D0) 50:50:MINOR	0.5-	1
161.6	0035	5B2$	&3	0.5-	1
162.2	0036	5B2	[5A0]	0.5-	1
163.6	0037	5A2	&$	0.5-	1
165.7	0038	4D4	NO CORE	0.5-	1
176.3	0039	4A0		0.5-	1
176.9	0040	4L12		0.5-	1
177.8	0041	5D$		0.5-	1
178.2	0042	4L1		0.5-	1
178.3	0043	4A0		0.5-	1
178.7	0044	5B$		0.5-	1
179.2	0045	4A4		0.5-	1
179.6	0046	4A4	NO CORE	0.5-	1
183.0	0047	5C$4	(5D4$)	0.5-	1
184.0	0048	4C5	(4L0) 95:05	0.5-	1
185.7	0049	4A0		0.5-	1
189.3	0050	3G0	[5B6] (4L2)(5C4$)(10Q0)	0.5-	1
199.2	0051	4C5	(4C0)	0.5-	1

DDH: FAGA087 UTM-N: 905,199.0 UTM-E: 592,161.3 UTM-ELEV: 1,305.0 TOTAL DEPTH: 426.4 SECTION: W 82
RFE: S2 RFE DIR: 230 PLUNGE ANGLES: 11 312 DHD CALC: 1 SS CALC: 1

DEPTH	UNIT	CODE	DESC		RECOVERY	IND
206.0	0052	4D5	(4DD)	NO CORE	0.5-	1
219.9	0053	4C0	(4C5) MINOR(5D4*)		0.5-	1
225.7	0054	4D0		NO CORE	0.5-	1
229.8	0055	4L12	(5D4$) [4Q$]		0.5-	1
233.5	0056	4D0		NO CORE	0.5-	1
234.7	0057	5D4$	(4DE4)		0.5-	1
236.0	0058	4D0		NO CORE	0.5-	1
237.3	0059	5D4*	(4DE4)		0.5-	1
239.3	0060	4E4		NO CORE	0.5-	1
240.4	0061	4A1	&3		0.5-	1
241.2	0062	5D4$	(5B02) [5D4$(5A0)] 70:30		0.5-	1
249.2	0063	3G1			0.5-	1
250.5	0064	4A4	[4D5]		0.5-	1
252.4	0065	5B62	9		0.5-	1
254.9	0066	4L24	(3G0)(4L12) 33:33:33		0.5-	1
257.9	0067	3G0	(5D3) [5B6(5D3)]		0.5-	1
273.3	0068	3G0	&9		0.5-	1
276.5	0069	3B3	(3G0) [5D0(5B6)] 80:20		0.5-	1
291.2	0070	3G0	&9 (3B3) MINOR		0.5-	1
292.3	0071	4L0	&6		0.5-	1
294.0	0072	3B3	[5D3]		0.5-	1
294.7	0073	4L0	&6 &7		0.5-	1
308.6	0074	3G0	&9		0.5-	1
312.1	0075	4L26	(10Q0) 85:15		0.5-	1
312.3	0076	3G1			0.5-	1
313.1	0077	4L0	&4 ->4C0		0.5-	1
313.4	0078	4A0			0.5-	1
313.6	0079	5C4@			0.5-	1
315.0	0080	4A0	&1		0.5-	1
315.5	0081	4G4	(4E4)		0.5-	1
317.6	0082	4A0	(4A3)		0.5-	1
322.6	0083	4G4	(4E4)	NO CORE	0.5-	1
323.0	0084	4E0			0.5-	1
323.8	0085	5A$	->4A0		0.5-	1
324.2	0086	4E0			0.5-	1
326.8	0087	4G4		NO CORE	0.5-	1
327.4	0088	4E0			0.5-	1
328.9	0089	5A$			0.5-	1
330.6	0090	4A4			0.5-	1
335.0	0091	4G4	(4E4) [4E4(4G4)]	NO CORE	0.5-	1
337.0	0092	4A34			0.5-	1
337.4	0093	4A0			0.5-	1
337.6	0094	4L0	&$		0.5-	1
340.8	0095	3G0			0.5-	1
342.3	0096	4L12	(5D4@)		0.5-	1
347.7	0097	5C4$@	(5D4$@)		0.5-	1
349.4	0098	4A0	(4A3)		0.5-	1
350.2	0099	4C3	(4C5)		0.5-	1
351.2	0100	5D4@			0.5-	1
351.7	0101	4E4			0.5-	1
365.4	0102	3G0	&9		0.5-	1

DDH: FAGA087 UTM-N: 905,199.0 UTM-E: 592,161.3 UTM-ELEV: 1,305.0 TOTAL DEPTH: 426.4 SECTION: W 82
RFE: S2 RFE DIR: 230 PLUNGE ANGLES: 11 312 DHD CALC: 1 SS CALC: 1

DEPTH	UNIT	CODE	DESC	RECOVERY	IND
366.5	0103	3G4	->4LO	0.5-	1
375.3	0104	3GO	(3G9)	0.5-	1
376.2	0105	4LO	(4H4) MINOR	0.5-	1
380.7	0106	3GO	(3G9)(4LO) 45:45:10	0.5-	1
394.4	0107	4LO		0.5-	1
395.5	0108	4H4	(4L1) [4L13]	0.5-	1
402.0	0109	4L27	&9	0.5-	1
402.6	0110	5C46	[5D4$]	0.5-	1
410.0	0111	4L27		0.5-	1
410.4	0112	4AO		0.5-	1
410.7	0113	4LO		0.5-	1
410.9	0114	4AO		0.5-	1
416.9	0115	5D4@	(5C4@)(3G4@)	0.5-	1
419.2	0116	5D4@		0.5-	1
423.8	0117	3G4	->4L	0.5-	1
426.4	0118	4LO		0.5-	1

DDH: FAGA087 UTM-N: 905,199.0 UTM-E: 592,161.3 UTM-ELEV: 1,305.0 TOTAL DEPTH: 426.4 SECTION: W 82
RFE: S2 RFE DIR: 230 PLUNGE ANGLES: 11 312 DHD CALC: 1 SS CALC: 1

DDH	F DEPTH	T DEPTH	FEAT SYMTRY	S0 ANGLE	S0 DIRECT	S1 ANGLE	S1 DIRECT	S2 ANGLE	S2 DIRECT	RFE CDE	DHDC	SDC	PROCESS
FAGA087	0.0	11.3	CS2	0	0	0	0	70	230	0	1	1	1
FAGA087	0.0	18.5	CS2	0	0	0	0	80	230	0	1	1	1
FAGA087	0.0	26.5	CS2	0	0	0	0	72	230	0	1	1	1
FAGA087	0.0	29.3	CS2	0	0	0	0	64	230	0	1	1	1
FAGA087	0.0	34.4	CS2	0	0	0	0	68	230	0	1	1	1
FAGA087	0.0	39.0	CS2	0	0	0	0	65	230	0	1	1	1
FAGA087	0.0	42.8	CS2	0	0	0	0	65	230	0	1	1	1
FAGA087	0.0	45.6	CS2	0	0	0	0	70	230	0	1	1	1
FAGA087	0.0	50.3	CS2	0	0	0	0	68	230	0	1	1	1
FAGA087	0.0	56.2	CS2	0	0	0	0	80	230	0	1	1	1
FAGA087	0.0	62.8	CS2	0	0	0	0	70	230	0	1	1	1
FAGA087	0.0	72.2	CS2	0	0	0	0	70	230	0	1	1	1
FAGA087	0.0	77.9	CS2	0	0	0	0	70	230	0	1	1	1
FAGA087	0.0	83.6	CS2	0	0	0	0	68	230	0	1	1	1
FAGA087	0.0	89.5	CS2	0	0	0	0	75	230	0	1	1	1
FAGA087	0.0	95.6	CS2	0	0	0	0	80	230	0	1	1	1
FAGA087	0.0	102.0	CS2	0	0	0	0	85	230	0	1	1	1
FAGA087	0.0	108.1	CS2	0	0	0	0	82	230	0	1	1	1
FAGA087	0.0	114.3	CS2	0	0	0	0	78	230	0	1	1	1
FAGA087	0.0	118.9	CS2	0	0	0	0	75	230	0	1	1	1
FAGA087	0.0	125.4	CS2	0	0	0	0	72	230	0	1	1	1
FAGA087	0.0	130.6	CS2	0	0	0	0	80	230	0	1	1	1
FAGA087	0.0	137.2	CS2	0	0	0	0	75	230	0	1	1	1
FAGA087	0.0	143.0	CS2	0	0	0	0	85	230	0	1	1	1
FAGA087	0.0	146.0	CS2	0	0	0	0	78	230	0	1	1	1
FAGA087	0.0	151.5	CS2	0	0	0	0	80	230	0	1	1	1
FAGA087	0.0	157.3	CS2	0	0	0	0	85	230	0	1	1	1
FAGA087	0.0	159.9	CS2	0	0	0	0	70	230	0	1	1	1
FAGA087	0.0	171.6	CS2	0	0	0	0	58	230	0	1	1	1
FAGA087	0.0	176.8	CS2	0	0	0	0	64	230	0	1	1	1
FAGA087	0.0	182.6	CS2	0	0	0	0	76	230	0	1	1	1
FAGA087	0.0	188.7	CS2	0	0	0	0	63	230	0	1	1	1
FAGA087	0.0	194.8	CS2	0	0	0	0	80	230	0	1	1	1
FAGA087	0.0	206.7	CS2	0	0	0	0	80	230	0	1	1	1
FAGA087	0.0	212.0	CS2	0	0	0	0	81	230	0	1	1	1
FAGA087	0.0	216.1	CS2	0	0	0	0	85	230	0	1	1	1
FAGA087	0.0	240.2	CS2	0	0	0	0	70	230	0	1	1	1
FAGA087	0.0	245.1	CS2	0	0	0	0	70	230	0	1	1	1
FAGA087	0.0	255.0	CS2	0	0	0	0	75	230	0	1	1	1
FAGA087	0.0	259.1	CS2	0	0	0	0	83	230	0	1	1	1
FAGA087	0.0	268.8	CS2	0	0	0	0	80	230	0	1	1	1
FAGA087	0.0	277.5	CS2	0	0	0	0	83	230	0	1	1	1
FAGA087	0.0	281.0	CS2	0	0	0	0	78	230	0	1	1	1
FAGA087	0.0	289.6	CS2	0	0	0	0	80	230	0	1	1	1
FAGA087	0.0	295.7	CS2	0	0	0	0	85	230	0	1	1	1
FAGA087	0.0	302.8	CS2	0	0	0	0	80	230	0	1	1	1
FAGA087	0.0	310.0	CS2	0	0	0	0	70	230	0	1	1	1
FAGA087	0.0	323.7	CS2	0	0	0	0	85	230	0	1	1	1
FAGA087	0.0	328.1	CS2	0	0	0	0	60	230	0	1	1	1
FAGA087	0.0	338.6	CS2	0	0	0	0	75	230	0	1	1	1
FAGA087	0.0	345.3	CS2	0	0	0	0	75	230	0	1	1	1

DDH: FAGA087 UTM-N: 905,199.0 UTM-E: 592,161.3 UTM-ELEV: 1,305.0 TOTAL DEPTH: 426.4 SECTION: W 82
RFE: S2 RFE DIR: 230 PLUNGE ANGLES: 11 312 DHD CALC: 1 SS CALC: 1

DDH	F DEPTH	T DEPTH	FEAT	SYMTRY	S0 ANGLE	S0 DIRECT	S1 ANGLE	S1 DIRECT	S2 ANGLE	S2 DIRECT	RFE CDE	DHDC	SDC	PROCESS
FAGA087	0.0	356.6	CS2		0	0	0	0	60	230	0	1	1	1
FAGA087	0.0	362.4	CS2		0	0	0	0	76	230	0	1	1	1
FAGA087	0.0	367.1	CS2		0	0	0	0	80	230	0	1	1	1
FAGA087	0.0	378.6	CS2		0	0	0	0	78	230	0	1	1	1
FAGA087	0.0	385.0	CS2		0	0	0	0	75	230	0	1	1	1
FAGA087	0.0	391.8	CS2		0	0	0	0	87	230	0	1	1	1
FAGA087	0.0	399.0	CS2		0	0	0	0	75	230	0	1	1	1
FAGA087	0.0	408.1	CS2		0	0	0	0	75	230	0	1	1	1
FAGA087	0.0	412.1	CS2		0	0	0	0	70	230	0	1	1	1
FAGA087	0.0	415.6	CS2		0	0	0	0	85	230	0	1	1	1
FAGA087	0.0	426.4	CS2		0	0	0	0	70	230	0	1	1	1

DDH: FAGA037 UTM-N: 905,199.0 UTM-E: 592,161.3 UTM-ELEV: 1,305.0 TOTAL DEPTH: 426.4 SECTION: W 82
RFE: S2 RFE DIR: 230 PLUNGE ANGLES: 11 312 DHD CALC: 1 SS CALC: 1

DDH	F DEPTH	T DEPTH	FEAT	REC CD	PARLL	UPPER PLANE		INTERNAL PLANE		LOWER PLANE		DHD
FAGA087	9.7	13.3	P			0	0	0	0	0	0	1
FAGA087	0.0	13.3	G			0	0	99	999	0	0	1
FAGA087	13.3	16.7	P			0	0	0	0	0	0	1
FAGA087	24.3	25.6	FPG	2		99	999	0	0	0	0	1
FAGA087	28.3	29.8	B			0	0	0	0	0	0	1
FAGA087	0.0	29.8	G			0	0	99	999	0	0	1
FAGA087	29.8	35.9	B			0	0	0	0	0	0	1
FAGA087	63.2	67.0	GBF			99	999	99	999	0	0	1
FAGA087	81.3	81.6	G			0	0	68	0	0	0	1
FAGA087	82.7	83.0	G			0	0	99	999	0	0	1
FAGA087	119.4	121.9	G3F			35	0	0	0	99	999	1
FAGA087	130.8	130.9	G			99	999	0	0	0	0	1
FAGA087	132.2	132.3	G			0	0	0	0	99	999	1
FAGA087	146.3	148.7	B1G			0	0	99	999	0	0	1
FAGA087	161.6	1o2.2	G			0	0	0	0	0	0	1
FAGA087	163.6	166.4	NNN			0	0	0	0	0	0	1
FAGA087	178.3	178.7	RF?			0	0	0	0	0	0	1
FAGA087	179.2	179.6	NNN			0	0	0	0	0	0	1
FAGA087	199.2	206.0	NNN			0	0	0	0	0	0	1
FAGA087	219.7	225.7	NNN			0	0	0	0	0	0	1
FAGA087	229.8	233.4	NNN			0	0	0	0	0	0	1
FAGA087	234.6	235.9	NNN			0	0	0	0	0	0	1
FAGA087	237.2	239.2	NNN			0	0	0	0	0	0	1
FAGA087	0.0	239.2	XD?			0	0	0	0	0	0	1
FAGA087	313.2	313.4	G			0	0	99	999	0	0	1
FAGA087	317.6	322.6	NNN			0	0	0	0	0	0	1
FAGA087	324.1	326.8	NNN			0	0	0	0	0	0	1
FAGA087	330.5	334.9	NNN			0	0	0	0	0	0	1
FAGA087	340.8	342.1	QX			0	0	5	0	0	0	1
FAGA087	0.0	342.1	G			0	0	99	999	0	0	1
FAGA087	404.6	406.3	GB			0	0	99	999	99	999	1

DDH: FAGA087 UTM-N: 905,199.0 UTM-E: 592,161.3 UTM-ELEV: 1,305.0 TOTAL DEPTH: 426.4 SECTION: W 82
RFE: S2 RFE DIR: 230 PLUNGE ANGLES: 11 312 DHD CALC: 1 SS CALC: 1

DDH	SEGMENT NOS	COND INDICATOR
FAGA087	1	2
FAGA087	2	2
FAGA087	3	2
FAGA087	4	2
FAGA087	5	2
FAGA087	6	1

82 W

CYPRUS ANVIL MINING CORPORATION

Page 1 of 11

DIAMOND DRILL CORE LOG

Date: 24 July 82

Hole Number: FAGA 087

Project: GRUM

Location: VANGORDA PLATEAU

Claim: GRUM 3

Terr.Plane Co-ords.: ~~36,076.71~~ N

~~24,519.90~~ E 6905198.964 / 592161.335 transform K-A grid coordinates LCP-June 23/83

Grid Co-ords: 6+00N

F2+07W

K-A elev 10.61m. Elevation: 1305 m.

Total Depth: 1399 (426.4 m)

Purpose: To test ore

Reason hole Terminated: ore tested (ended in 4L)

Logged by: DSJ/GAJ

Date(s) Logged: 14-15 June 82

Drilling Contractor: Cameron Mackechnie

Hole Cemented: yes 31 bags

Steel down hole: no

Reference Fabric Orientation Diagram:

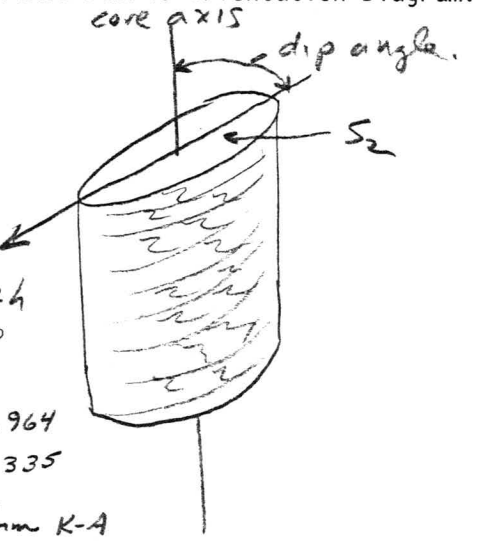

All symmetry determinations looking NW with S_2 dipping SW with dip azimuth 270. → 225 below 150m was (in 1982) now 230 for entire hole

Size	CORE From	To
BW	0	34'
BQ	34'	1399'

Collar Cased and Capped: no

Started: 20 June 75 Completed: 2 July 75

Cyprus Anvil Mining Corp.

DDH FAGA087 (2 8)

Diamond Drill Core Log Date: 25 July 82 Logged By: DSJ/GAJ/DJH (this page)

Code	Drillhole	Elevation	Northing	Easting	Units (feet/metres)	R.F.E.	
	2 8	10 16	17 24	25 32	34 39	41 42	
T	FAGA087	1305.0	9051999.0	591216 1.3	FEET	52	

Code	Drillhole	Depth		Zenith Angle		True Azimuth	Comments
	2 8	10 14		22 26		28 32	34 56
R	FAGA087	0	0	180.0		0.0	AT COLLAR
R	FAGA087	400	0	171.4		133.0	BY TROPARI
R	FAGA087	580	0	170.0		138.0	
R	FAGA087	800	0	173.0		129.0	
R	FAGA087	999	0	172.2		155.0	
R	FAGA087	1160	0	171.0		158.0	

Code	Drillhole	Comments, Errant Remarks, Snivellings and / or Lewd Suggestions
	2 8	10 56
R	FAGA087	ALSO KNOWN AS 7SA087
R	FAGA087	KERR ADDISON LOG SAYS SURVEY BY TROPAR
R	FAGA087	I DJH SAYS SURVEY BY SPERRY SUN

DDH FAGA087 (2 FEET! 8)

Cyprus Anvil Mining Corp.

Lithologic Log

Date: 14 June 82 Logged By: GJ/DSJ

Code	From	To	Recov.	No.	Unit	Description
1	10 14	16 20	22 24	26 28	30 34	35
L	0	32.0		1	X	overburden
L	32.0	55.0		2	SBO	poor core recovery S_2 foliaform gouge 3" thick at 43.7'
L	55.0	78.4		3	SDO	
L	78.4	86.5		4	SBO	S_2 foliaform gouge ~2" thick @ 80.6' major fault suspected as 25% core recovery 80-84'
L	86.5	93.0		5	SDO	PS_2
L	93.0	117.8		6	SBO	S_2 foliaform gouge ~2' @ 97.8' interval blocky and broken - no huge gouges
L	117.8	121.7		7	SDO	(QQ* calc)
L	121.7	124.3		8	SBO	(SB?)
L	124.3	149.1		9	SDO	
L	149.1	180.4		10	SBO	(SB3) 50:50
L	180.4	195.7		11	SDO	(SBG2) 90:10
L	195.7	198.9		12	SBG*	*=d.b (SDO) 80:20
L	198.9	201.5		13	SDO	
L	201.5	207.6		14	SB*	±3 *=d.b
L	207.6	220.0		15	SBO	(SDO) gouge and broken core over entire interval - major fault suspected upper 11 S_2 lower indet. interval fol'n. ~ S_2 foliaform.
L	220.0	225.8		16	SDO	±3
L	225.8	233.9		17	SB3	± 8
L	233.9	244.8		18	SDO	±3
L	244.8	246.0		19	SBO	
L	246.0	248.5		20	SDO	
L	248.5	273.0		21	SBO	(SDO) 90:10 gouge from 267'-268' crudely S_2 parallel, gouge 271.5'-272.5' crudely 11 S_2
L	273.0	305.3		22	SDO	±3 (SBO ±8) (SB20) 90:10:trace no significant gouge
L	305.3	341.2		23	SBO	±2 no gouge
L	341.2	375.5		24	SB3	(SB3±8)
L	375.5	381.1		25	SD3	(SB20) 90.10 note: sharp SB2 contacts in SD imply SD = vole sediment not altn/redox facies.

DDH F-AGA-087 (2 / 8)

Cyprus Anvil Mining Corp.

Lithologic Log

Date: 14/6/82 Logged By: DSJ/EJ

Code	From	To	Recov.	No.	Unit	Description
1	10 14	16 20	22 24	26 28	30 34	35
L	3811	3920		26	SBD	
L	3920	4002		27	SBP	GOUGE huge rfing fault upper contact 35/000 lower contact crudely S_2 foliaform
L	4002	4480		28	SBO	(SB8)(SB*) *=dolo. gouge 429.2-429.6 upper // S_2 lower indeterminate., gouge at 433.9 -434.2 upper indet. lower // S_2
L	4480	4543		29	SB2O	
L	4543	4705		30	SB8	(SDO ± *) dolo. 50:50
L	4705	4800		31	SB2	
L	4800	4880		32	SB8	minor S_2 foliaform gouge - core broken over interval.
L	4880	5048		33	SDO	(SB8) 50:50 more heavily carbonated than above - Au
L	5048	5143		34	SB8	(SB2)(SDO) 50:50 minor.
L	5143	5303		35	SB2*	±3 *=dolo is this an exhalative carbonate - check for
L	5303	5323		36	SB2	[SAO] gouge- indeterminate
L	5323	5368		37	SA2	± * *=dolo.
L	5368	5436		38	4D4	interpreted from KA
L	5436	5785		39	4A0	" + 5% rst of core present
L	5785	5803		40	4L12	approaching 4CO
L	5803	5833		41	5D*	dolo
L	5833	5846		42	4L1	
L	5846	5850		43	4A0	approaching 4L
L	5850	5863		44	5B*	dolo, rubble - probable fault no attitudes.
L	5863	5880		45	4A4	
L	5880	5894		46	4A4	assumed from KA
L	5894	6005		47	5C*4	(5D4*) dolo.
L	6005	6038		48	4C5	(4LO) 95:5
L	6038	6094		49	4A0	
L	6094	6212		50	3G0	[SB6](4L2)(5C4* dolo)(QQO) note 5C4* Top of interval immediately below one
L	6212	6536		51	4C5	(4CO)
L	6536	6760		52	4D5	(4DO) KA interpretation missing core.

DDH FAGA087 (2–8)

Cyprus Anvil Mining Corp.

Lithologic Log

Date: 14/6/82 Logged By: DSJ/GJ

Code	From	To	Recov.	No.	Unit	Description
1	10–14	16–20	22–24	26–28	30–34	35
L	676 0	721 4		53	4C0	(4C5) 713-4 - 714-7 have 5D4* interleaved with "ore"
L	721 4	740 5		54	4D0	KA interp.
L	740 5	754 0		55	4L12	(5D4*) dolo [4Q*] unit interpreted as interleaved siliceous sediments, and meta-tuffs hydrothermally altered, heavily quartz carbonate sulfide veined - feeder zone??? vein like material clearly pre D_2
L	754 0	766 0		56	4D0	interpreted from KA
L	766 0	770 0		57	5D4*	dolo (4DE4) subfoliaform veins or stringers
L	770 0	774 2		58	4D0	KA interpretation
L	774 2	778 5		59	5D4*	(4DE4) cross cutting stringer at 774.9
L	778 5	785 0		60	4E4	KA interpretation - above sequence of sulfides and probable metavolcanic rocks suggests contemporaneous volcanism and sulfide deposition (of course they could be sills but then maybe they aren't)
L	785 0	788 7		61	4A1	±3 uppermost 0.7' bxiated - upright cycle of 4A → 4E4 but ?? meaningfull
L	788 7	791 4		62	5D4*	dolo (5B02) ← [5A0] 70:30 - again volcanics and seds show knife edge contacts
L	791 4	817 6		63	3G1	begining of variably calcareous quartz chlorite po carbonate lamine in parting "calc silicaty" appearance to H€mm
L	817 6	822 0		64	4A4	[4D5]
L	822 0	828 0		65	5B62	9 not 5A19 or 4A shitty - "this is so bad you have to ask why anybody would be so dumb as to split it" x DSJ Emmings 14 June 82
L	828 0	836 2		66	4L24	(3G0)(4L12) subequal proportions
L	836 2	846 2		67	3G0	(5D3) [5B6, 5D3]
L	846 2	896 8		68	3G0	±9 characteristically "calc silicated" like unit 63 with greater density of chl po qtz lamine

DDH FAGA087 (2–8)

Cyprus Anvil Mining Corp.

Lithologic Log

Page 6 of 11

Date: 14/6/82 Logged By: DSJ/GJ

Code	From	To	Recov.	No.	Unit	Description
1	10–14	16–20	22–24	26–28	30–34	35
L	8968	9070		69	3B3	(3G0) 80:20 [SD0-5B6]
L	9070	9553		70	3G0	±9 as previous two "calc sil" units
						minor 3B3 [SD3] interbands
L	9553	9590		71	4L0	±6
L	9590	9645		72	3B3	[SD3]
L	9645	9670		73	4L0	±6±7
L	9670	10125		74	3G0	±9 "calc silicaty" as above units
L	10125	10239		75	4L26	(0Q0) 85:15
L	10239	10246		76	3G1	
L	10246	10273		77	4L0	±4 approaching 4C0
L	10273	10283		78	4A0	lower half gouge 11 S2
L	10283	10290		79	5C4*	ank
L	10290	10334		80	4A0	±1
L	10334	10350		81	4G4	(4E4)
L	10350	10420		82	4A0	(4A3)
L	10420	10585		83	4G4	(4E4) KA interp missing core
L	10585	10596		84	4E0	2oz grade
L	10596	10623		85	5A*	dolo approaching 4A0
L	10623	10635		86	4E0	
L	10635	10723		87	4G4	interp. from KA log - missing core
L	10723	10740		88	4E0	
L	10740	10790		89	5A*	dolo
L	10790	10845		90	4A4	
L	10845	10990		91	4G4	(4E4) or 4G4 [4E4] KA interp - core missing
L	10990	11055		92	4A3,4	(dead bird)
L	11055	11068		93	4A0	
L	11068	11077		94	4L0	±* . dolo
L	11077	11182		95	3G0	
L	11182	11230		96	4L12	(SD4*) anhydritic - unit cut by anhydrite
						6xa 5°/000, 0.1' gouge 11 S2 at 1122.6
L	11230	11408		97	5C4*	(SD4*) anhydrite + dolomite "fuchite"
						very strong fuchite 1137–1140
L	11408	11462		98	4A0	(4A3)
L	11462	11490		99	4C3	(4C5)
L	11490	11523		100	5D4*	ank

955-3?

on 955-3?

C.A.M.C. 1981 – E-3

DDH FAG A087 (2–8)

Cyprus Anvil Mining Corp.

Lithologic Log

Page 7 of 11 too many

Date: 14/6/82 Logged By: DSJ/GS

Code	From	To	Recov.	No.	Unit	Description
1	10–14	16–20	22–24	26–28	30–34	35
L	1152 3	1154 0		101	4E4	
L	1154 0	1198 8		102	3G0	±9 no major gouge.
L	1198 8	1202 5		103	3GH	approaching 4L0
L	1202 5	1231 3		104	3G0	(3G9)
L	1231 3	1234 4		105	4L0	0.5 (4H4) at 1233.4
L	1234 4	1248 9		106	3G0	(3G9)(4L0) 45:45:10
L	1248 9	1294 0		107	4L0	
L	1294 0	1297 7		108	4H4	(4L1)[4H3] is very altered not necess talc/sp.
L	1297 7	1318 9		109	4L2 7	±9
L	1318 9	1320 9		110	5C4*	dolo [5D4* dolo]
L	1320 9	1345 0		111	4L2 7	from 1327.6 to 1333.2 large gouge zone and broken core – lower contact parallels subhorizontal S_2 upper contact 55° to core axis, internal gouge sub ll to S_2
L	1345 0	1346 5		112	4A0	
L	1346 5	1347 5		113	4L0	
L	1347 5	1348 0		114	4A0	
L	1348 0	1367 7		115	5D4*	ank (5C4*) ank. (3G4*) ank – ratios of carbonated seds and volcanics – extremely carbonated sequence of metavolcanics and metasediments with local massive metasomatic/hydrothermal carbonate development.
L	1367 7	1375 3		116	5D4*	ank less carbonated and more distinctive than previous unit [5C4*]
L	1375 3	1390 4		117	3G4	approaching 4L
L	1390 4	1399 0		118	4L0	hole stopped short – expletive deleted

C.A.M.C. 1981 – E-3

DDH FAGA087 (2–8) FEET

Cyprus Anvil Mining Corp.

Structural Log

Date: 15 June 82 Logged By: DSJ/GJ

Code	From	To	Feature	Sym	S_0 Dip Direct.	S_1 Dip Direct.	S_2 Dip Direct	Description
1	10–14	16–20	22–24	26	28–32	34–38	40–44	
S		370	CS2				70 270	
S		607	CS2				80	
S		870	CS2				72	
S		960	CS2				64	
S		1130	CS2				68	
S		1280	CS2				65	
S		1405	CS2				65	
S		1495	CS2				70	
S		1650	CS2				68	
S		1845	CS2				80	
S		2060	CS2				70	
S		2370	CS2				70	
S		2555	CS2				70	
S		2742	CS2				68	
S		2935	CS2				75	
S		3138	CS2				80	
S		3345	CS2				85	
S		3545	CS2				82	
S		3750	CS2				78	
S		3900	CS2				75	
S		4115	CS2				72	
S		4285	CS2				80	
S		4500	CS2				75 270	
S		4690	CS2				85 225	
S		4790	CS2				78	
S		4970	CS2				80	
S		5160	CS2				85	
S		5245	CS2				70	
S		5630	CS2				58	
S		5800	CS2				64	
S		5990	CS2				76	
S		6190	CS2				63	
S		6390	CS2				80	
S		6780	CS2				80	
S		6955	CS2				81	
S		7090	CS2				85 225	

DDH FAGA087 (2–8) FEET

Cyprus Anvil Mining Corp.
Structural Log

Date: 15 June 82 Logged By: DSJ GJ

Code (1)	From (10–14)	To (16–20)	Feature (22–24)	Sym (26)	S_0 Dip (28–32)	S_0 Direct.	S_1 Dip (34–38)	S_1 Direct.	S_2 Dip (40–44)	S_2 Direct	Description
S		7880	CS2						70	225	
S		8040	CS2						70		
S		8365	CS2						75		
S		8500	CS2						83		
S		8820	CS2						80		
S		9105	CS2						83		
S		9220	CS2						78		
S		9500	CS2						80		
S		9700	CS2						85		
S		9935	CS2						80		
S		10170	CS2						70		
S		10620	CS2						85		
S		10765	CS2						60		
S		11110	CS2						75		
S		11330	CS2						75		
S		11700	CS2						60		
S		11890	CS2						76		
S		12045	CS2						80		
S		12420	CS2						78		
S		12630	CS2						75		
S		12855	CS2						87		
S		13090	CS2						75		
S		13390	CS2						75		
S		13520	CS2						70		
S		13635	CS2						85		
S		13990	CS2						70		

Start with 90390

Section 82W

FEET

DDH FAGA087 Cyprus Anvil Mining Corp

Page 10 of 11

Logged by

ASSAY LOG (SAMPLER'S COPY) Date Sampled by

CODE	FROM	TO	SAMPLE	INTR.	REC (m)	UNIT	DESCRIPTION	KA·tag #s
1	10 14	16 20	22 26	28 30	32 34	36 40	42	
P	5368	5415	90390	47	47	4D4	int KA	1736 & 1737
P	5415	5436	90391	21	21	4D4	"	1738
P	5436	5460	90392	24	24	4A0		1739
P	5610	5650	12501	40	30	4A0	bad sample	1743
P	5650	5700	12502	50	45	4A0		1743
P	5700	5750	12503	50	55	4A0		1744
P	5750	5785	12504	35	35	4A0		1744
P	5863	5894	90393	31	31	4A4		1745 + a little more
P	6005	6038	12505	33	33	4C5		1748
P	6038	6094	12506	56	56	4A0		1748
P	6212	6270	12507	58	58	4C5	(4C0)	1749
P	6270	6324	12508	54	54	4C5	(4C0)	1749
P	6324	6378	12509	54	54	4C5	(4C0)	1750
P	6378	6432	12510	54	54	4C5	(4C0)	1751
P	6432	6486	12511	54	54	4C5	(4C0)	1752
P	6486	6536	12512	50	50	4C5	(4C0)	1753
P	6536	6634	90394	98	94	4D5		1754
P	6634	6660	90395	26	26	4D5		1755
P	6660	6760	90396	100	100	4D5		1756
P	6760	6810	12513	50	50	4C0	(4C5)	1757
P	6810	6860	12514	50	50	4C0	(4C5)	1757
P	6860	6910	12515	50	50	4C0	(4C5)	1758
P	6910	6960	12516	50	50	4C0	(4C5)	1758 + 1759
P	6960	7010	12517	50	50	4C0	(4C5)	1759 + 1760
P	7010	7060	12518	50	50	4C0	(4C5)	1760
P	7060	7110	12519	50	50	4C0	(4C5)	1761
P	7110	7160	12520	50	50	4C0	(4C5)	1761 + 1762
P	7160	7214	12521	54	54	4C0	(4C5)	1762
P	7214	7310	90397	96	94	4D0		1763
P	7310	7405	90398	95	94	4D0		1764
P	7540	7610	90399	70	70	4D0		1767
P	7610	7660	90400	50	50	4D0		1768
P	7785	7850	90401	65	63	4E4		1770
P	7850	7887	12522	37	37	4A1		1771
P	8176	8220	12523	44	44	4A4	[4D5]	1772
P	10290	10334	12524	44	44	4A0	±1	1776

DDH EAGA087 (2–8) Cyprus Anvil Mining Corp

Page 11 of 11

Logged by

ASSAY LOG (SAMPLER'S COPY) Date Sampled by

CODE	FROM	TO	SAMPLE	INTR.	REC (m)	UNIT	DESCRIPTION	
1	10–14	16–20	22–26	28–30	32–34	36–40	42	
P	10394	10450	12525	16	16	4G4	1776	
P	10450	10462	12526	70	70	4A0	1776+1777	
P	10462	10480	90402	60	59	4G4	1778	
P	10480	10528	90403	48	47	4G4	1779	
P	10528	10585	90404	57	56	4G4	1780	
P	10585	10596	90405	10	09	4E0	1781	
P	10622	10632	90406	12	12	4E0	1782	
P	10632	10726	90407	94	91	4G4	1783	
P	10726	10746	90408	20	19	4E0	1786	
P	10789	10845	90409	56	56	4A4	1787	
P	10845	10890	90410	45	44	4G4	1788	
P	10890	10990	90411	100	97	4G4	1789	
P	10950	11105	90412	65	63	4A34	1790	
P	11105	11077	90413	22	22	4A10	(4L0) 1793	
P	11408	11462	12527	54	54	4A0	(4A3) 1791	
P	11462	11490	12528	28	28	4C3	(4C5) 1791	
P	11523	11540	12529	17	17	4E4	1792	
P	12940	12977	12530	37	37	4H4	(4L1) 1794	

C.A.M.C. 1981 - E - 5

DDH FAGA087 (2 8)

Cyprus Anvil Mining Corp.

Structural Log

Page _____ of _____

Date: _____ Logged By: _____

Code	From	To	Feature	Sym	S_0 Dip Direct.	S_1 Dip Direct.	S_2 Dip Direct	Description
1	10 14	16 20	22 24	26	28 32	34 38	40 44	
	320	437	P					
		437	G			11 S_2		
	437	550	P					
	80	84	FPG2		11 S_2			
	930	978	B					
		978	G			11 S_2		
	978	1178	B					
	2076	2200	GBF		11 S_2	S_2		
	267	268	G			11 S_2		
	2715	2725	G			11 S_2		
	3920	4002	G3F		35000		11 S_2	
	4292	4296	G		11 S_2			
	4339	4342	G				11 S_2	
	4800	4880	B1G			11 S_2		
	5303	5323	G					
	5368	5460	NNN					
	585	5863	RF?					
	558	5594	NNN					
	6536	6760	NNN					
	721	7405	NNN					
	7540	7660	NNN					
	7760	7742	NNN					
	7785	7850	NNN					
		7750	XD?					
	10278	10283	G			11 S_2		
	10420	10565	NNN					
	10635	10723	NNN					
	10845	10990	NNN					
	11182	11225	QX			05000		
		11226	G			11 S_2		
	13276	13332	GB			11 S_2	11 S_2	

FAGA093

DRILL HOLE : FAGA093

NORTHING : 905,290.3

EASTING : 592,243.9

ELEVATION : 1,302.8

TOTAL DEPTH : 350.5

SECTION : W 82

R.F.E. : S2

RFE DIRECTION: 230

PLUNGE ANGLE : 11

PLUNGE DIRECT: 312

DHD CALC: 1

SS CALC: 1

DETAIL RECORD COUNTS:

NOS ORE-SAMPLES: 17

NOS DOWN-H-SURVEYS: 6

NOS DOWN-H-LITHOLOGY: 100

NOS DOWN-H-STRUCTURE: 39

NOS DOWN-H-FAULTS: 50

NOS DOWN-H-SPLINES: 6

NOS COMPOSITES: 0

DDH: FAGA093 UTM-N: 905,290.3 UTM-E: 592,243.9 UTM-ELEV: 1,302.8 TOTAL DEPTH: 350.5 SECTION: W 82
RFE: S2 RFE DIR: 230 PLUNGE ANGLES: 11 312 DHD CALC: 1 SS CALC: 1

DEPTHS FROM	DEPTHS TO	SAMPLE NO.	INT.	REC.	ROCK UNIT	S.G. PULP	CU %	PB %	ZN %	AG(AA) G/MT	AG(FA) G/MT	AU(FA) G/MT	PO %	PY %	TOT FE	BAO %	HG %	MN %	AS %	BA %	S.G. W.R.
76.5	77.1	12531	.6	.0	4D0	3.08	.04	2.12	4.63	33.00		.40	2	6	9						
77.1	78.5	12532	1.4	.0	4A4	3.06	.02	2.50	5.50	48.00		.40	3	4	7						
79.1	80.5	12533	1.4	.0	4A4	2.95	.04	2.75	6.00	48.00		.62	1	2	4						
80.5	81.9	12534	1.4	.0	4A4	3.20	.11	2.75	4.25	47.00		1.43	2	9	11						
106.6	108.7	12535	2.1	.0	4C5	2.91	.05	.84	1.87	15.99		.40	1	4	5						
108.7	110.8	12536	2.1	.0	4C5	2.99	.10	1.12	2.58	23.00		.68	1	6	7						
110.8	112.8	12537	2.0	.0	4C5	2.91	.08	1.40	2.81	25.00		.47	1	2	3						
137.0	137.5	12538	.5	.0	4E4		.05	7.49	14.80	170.00											
139.2	140.5	12539	1.3	.0	4A41	3.35	.08	5.50	8.80	90.00		1.30	2	8	11						
142.0	143.6	12540	1.6	.0	4EL		.04	2.14	2.25	37.00											
289.3	289.7	90457	.4	.0	4E4			4.88	4.55	75.79											
289.7	290.8	90458	1.1	.0	4L12			4.88	4.55	75.79											
298.4	300.1	12543	1.7	.0	4C5	2.91	.02	1.70	2.43	27.00		.62	1	3	4						
300.1	301.9	12544	1.8	.0	4C5	2.91	.02	1.32	2.68	22.00		.62	1	2	4						
302.1	302.7	12545	.6	.0	4E46	3.97	.05	3.54	5.90	56.99		.68	1	15	16						
303.5	304.9	12546	1.4	.0	4C5		.02	1.03	1.55	18.00											
348.0	348.5	12547	.5	.0	4AH4		.08	2.83	4.76	48.00											
WEIGHTED AVERAGE																					
76.5	78.5		2.0	.0		3.06	.03	2.39	5.24	43.50		.40	2	5	8						
79.1	81.9		2.8	.0		3.07	.07	2.75	5.12	47.50		1.02	2	6	8						
106.6	112.8		6.2	.0		2.93	.07	1.12	2.41	21.27		.52	1	4	5						
137.0	137.5		.5	.0			.05	7.49	14.80	170.00											
139.2	140.5		1.3	.0		3.35	.08	5.50	8.80	90.00		1.30	2	8	11						
142.0	143.6		1.6	.0			.04	2.14	2.25	37.00											
289.3	290.8		1.5	.0				4.88	4.55	75.79											
298.4	301.9		3.5	.0		2.91	.02	1.50	2.56	24.42		.62	1	3	4						
302.1	302.7		.6	.0		3.97	.05	3.54	5.90	56.99		.68	1	15	16						
303.5	304.9		1.4	.0			.02	1.03	1.55	18.00											
348.0	348.5		.5	.0			.08	2.83	4.76	48.00											

DDH: FAGA093 UTM-N: 905,290.3 UTM-E: 592,243.9 UTM-ELEV: 1,302.8 TOTAL DEPTH: 350.5 SECTION: W 82
RFE: S2 RFE DIR: 230 PLUNGE ANGLES: 11 312 DHD CALC: 1 SS CALC: 1

DEPTH	ZENITH	AZIMUTH
0.000	180.000	0.000
61.000	175.000	113.000
121.900	169.000	113.000
195.100	163.800	124.000
262.100	162.800	117.000
335.300	168.000	58.000

DDH: FAGA093 UTM-N: 905,290.3 UTM-E: 592,243.9 UTM-ELEV: 1,302.8 TOTAL DEPTH: 350.5 SECTION: W 82
RFE: S2 RFE DIR: 230 PLUNGE ANGLES: 11 312 DHD CALC: 1 SS CALC: 1

DEPTH	UNIT	CODE	DESC	RECOVERY	IND
5.0	0001	#		0.5-	1
17.9	0002	5B0	(5D0)	0.5-	1
23.5	0003	5B6		0.5-	1
29.5	0004	5D0		0.5-	1
29.8	0005	5B86		0.5-	1
36.0	0006	5D$		0.5-	1
39.6	0007	5B6	(5D0)	0.5-	1
40.4	0008	5D0		0.5-	1
40.7	0009	5D0		0.5-	1
42.7	0010	5B0	(5D0)	0.5-	1
44.8	0011	5B0		0.5-	1
45.6	0012	5D0		0.5-	1
48.4	0013	5B0		0.5-	1
50.4	0014	5D0		0.5-	1
55.7	0015	5B0	(10Q0)	0.5-	1
58.9	0016	5D3	(5B0) 90:10	0.5-	1
61.5	0017	5B0	(5D0) 80:20	0.5-	1
66.0	0018	5D3	(5B0) 90:10	0.5-	1
71.0	0019	5B0	(5D0) 90:10	0.5-	1
76.6	0020	5D0	(5C@)	0.5-	1
77.2	0021	4D0		0.5-	1
78.5	0022	4A4	(5D*) 90:10	0.5-	1
79.1	0023	5D4@		0.5-	1
81.2	0024	4A4	(5D4@) 95:05	0.5-	1
81.3	0025	5D4*		0.5-	1
81.9	0026	4A0		0.5-	1
82.3	0027	5D4@		0.5-	1
84.2	0028	4A0	(4C5) 50:50	0.5-	1
84.8	0029	4L1	&2	0.5-	1
86.5	0030	4C5		0.5-	1
87.3	0031	4L12	&4	0.5-	1
87.8	0032	4A0	(10Q0)	0.5-	1
87.9	0033	4A0		0.5-	1
88.7	0034	3G9		0.5-	1
106.6	0035	3G0		0.5-	1
112.8	0036	4C5		0.5-	1
129.4	0037	3G0	&9	0.5-	1
133.8	0038	4L0	(3G0)	0.5-	1
135.9	0039	3G0	&9	0.5-	1
136.5	0040	5D4$		0.5-	1
137.0	0041	5D4*	(3G0)	0.5-	1
137.5	0042	4E4	&#	0.5-	1
139.2	0043	5D4*		0.5-	1
140.5	0044	4A41		0.5-	1
142.0	0045	5D4*	(4L1)	0.5-	1
143.6	0046	4E46	5 (4L1) [5D4]	0.5-	1
146.1	0047	3G9	(5D*) 90:10	0.5-	1
147.0	0048	5D4*		0.5-	1
148.0	0049	4A0	(4D0)	0.5-	1
148.2	0050	4D0		0.5-	1
174.5	0051	3G39	[5A0] (3G0)(4L0)	0.5-	1

DDH: FAGA093 UTM-N: 905,290.3 UTM-E: 592,243.9 UTM-ELEV: 1,302.8 TOTAL DEPTH: 350.5 SECTION: W 82
RFE: S2 RFE DIR: 230 PLUNGE ANGLES: 11 312 DHD CALC: 1 SS CALC: 1

DEPTH	UNIT	CODE	DESC	RECOVERY	IND
175.1	0052	5D4@	(3G0) 70:30	0.5-	1
179.9	0053	3G0	&9	0.5-	1
184.4	0054	4L1	(5D4*)(5A6)	0.5-	1
185.0	0055	5C4@		0.5-	1
185.3	0056	4E0	(5C4*)	0.5-	1
185.5	0057	5A19		0.5-	1
188.2	0058	5D0	[5C0]	0.5-	1
192.9	0059	5C0		0.5-	1
195.7	0060	5D0	[5C4*][5B8]	0.5-	1
197.0	0061	5B86		0.5-	1
200.2	0062	3G0		0.5-	1
203.5	0063	3G9	&3	0.5-	1
207.0	0064	3G0	(3G9)	0.5-	1
212.8	0065	5A0	&3	0.5-	1
214.3	0066	5C04	*	0.5-	1
214.7	0067	5A0		0.5-	1
219.6	0068	5D*	(3G0 &9)	0.5-	1
221.3	0069	5B8		0.5-	1
222.7	0070	3G0	&9	0.5-	1
223.2	0071	3G0		0.5-	1
230.9	0072	3G0	&9 &3	0.5-	1
231.4	0073	5D3		0.5-	1
233.8	0074	3G0	&8 &9 &3	0.5-	1
234.4	0075	5D3		0.5-	1
237.9	0076	3G0	&9 (3B3) [5D3]	0.5-	1
241.0	0077	5D3	(3G0) 95:05	0.5-	1
247.8	0078	3G0	(5D4)	0.5-	1
253.6	0079	5A6		0.5-	1
274.3	0080	5A0		0.5-	1
280.4	0081	5A@	&3	0.5-	1
285.0	0082	5D4@	(5A0)(5A6)(5C_) 60:20:15:05	0.5-	1
289.3	0083	5A1	(3G0 &9)(10Q0) 30:40:30	0.5-	1
289.7	0084	4E4		0.5-	1
290.8	0085	4L21	4 (5A19)	0.5-	1
298.4	0086	3G4	&9 (4L2)	0.5-	1
301.9	0087	4C5		0.5-	1
302.1	0088	5D4*		0.5-	1
302.7	0089	4E46	#	0.5-	1
303.5	0090	5D4@		0.5-	1
304.9	0091	4C5	(4L124)(4C0)	0.5-	1
319.8	0092	3G0		0.5-	1
322.0	0093	4L0	&7	0.5-	1
325.0	0094	3G8	[5D6]	0.5-	1
341.0	0095	3G0		0.5-	1
341.4	0096	3G0		0.5-	1
344.6	0097	3G0		0.5-	1
348.0	0098	3G4		0.5-	1
348.5	0099	4A4	(4H4)	0.5-	1
350.5	0100	4L0	&2 &4	0.5-	1

DDH: FAGA093 UTM-N: 905,290.3 UTM-E: 592,243.9 UTM-ELEV: 1,302.8 TOTAL DEPTH: 350.5 SECTION: W 82
RFE: S2 RFE DIR: 230 PLUNGE ANGLES: 11 312 DHD CALC: 1 SS CALC: 1

DDH	F DEPTH	T DEPTH	FEAT	SYMTRY	S0 ANGLE	S0 DIRECT	S1 ANGLE	S1 DIRECT	S2 ANGLE	S2 DIRECT	RFE CDE	DHDC	SDC	PROCESS
FAGA093	0.0	13.5	CS2		0	0	0	0	45	230	0	1	1	1
FAGA093	0.0	35.5	CS2		0	0	0	0	88	230	0	1	1	1
FAGA093	0.0	46.1	CS2		0	0	0	0	72	230	0	1	1	1
FAGA093	0.0	55.5	CS2		0	0	0	0	62	230	0	1	1	1
FAGA093	0.0	63.3	CS2		0	0	0	0	70	230	0	1	1	1
FAGA093	0.0	74.0	CS2		0	0	0	0	67	230	0	1	1	1
FAGA093	0.0	81.0	CS2		0	0	0	0	67	230	0	1	1	1
FAGA093	0.0	85.2	CS2		0	0	0	0	58	230	0	1	1	1
FAGA093	0.0	92.2	CS2		0	0	0	0	65	230	0	1	1	1
FAGA093	0.0	100.0	PS2	P	0	0	0	0	68	230	0	1	1	1
FAGA093	0.0	108.5	CS2		0	0	0	0	72	230	0	1	1	1
FAGA093	0.0	120.0	CS2		0	0	0	0	76	230	0	1	1	1
FAGA093	0.0	121.3	CS2		0	0	0	0	72	230	0	1	1	1
FAGA093	0.0	139.5	CS2		0	0	0	0	70	230	0	1	1	1
FAGA093	0.0	145.4	PS2	P	0	0	0	0	76	230	0	1	1	1
FAGA093	0.0	151.3	CS2		0	0	0	0	75	230	0	1	1	1
FAGA093	0.0	171.0	CS2		0	0	0	0	77	230	0	1	1	1
FAGA093	0.0	174.1	PS2	P	0	0	0	0	80	230	0	1	1	1
FAGA093	0.0	188.5	PS2	P	0	0	0	0	72	230	0	1	1	1
FAGA093	0.0	194.5	PS2	P	0	0	0	0	80	230	0	1	1	1
FAGA093	0.0	200.0	PS2	P	0	0	0	0	64	230	0	1	1	1
FAGA093	0.0	206.6	PS2	P	0	0	0	0	80	230	0	1	1	1
FAGA093	0.0	213.8	PS2	P	0	0	0	0	80	230	0	1	1	1
FAGA093	0.0	222.6	CS2		0	0	0	0	75	230	0	1	1	1
FAGA093	0.0	231.7	CS2		0	0	0	0	80	230	0	1	1	1
FAGA093	0.0	237.4	PS2	P	0	0	0	0	72	230	0	1	1	1
FAGA093	0.0	253.8	PS2	P	0	0	0	0	75	230	0	1	1	1
FAGA093	0.0	265.7	PS2	P	0	0	0	0	72	230	0	1	1	1
FAGA093	0.0	269.8	PS2	P	0	0	0	0	64	230	0	1	1	1
FAGA093	0.0	275.3	PS2	P	0	0	0	0	73	230	0	1	1	1
FAGA093	0.0	284.2	PS2	P	0	0	0	0	60	230	0	1	1	1
FAGA093	0.0	298.7	PS2	P	0	0	0	0	75	230	0	1	1	1
FAGA093	0.0	305.8	PS2	P	0	0	0	0	72	230	0	1	1	1
FAGA093	0.0	313.6	PS2	P	0	0	0	0	68	230	0	1	1	1
FAGA093	0.0	319.2	PS2	P	0	0	0	0	62	230	0	1	1	1
FAGA093	0.0	326.4	PS2	P	0	0	0	0	72	230	0	1	1	1
FAGA093	0.0	332.6	PS2	P	0	0	0	0	72	230	0	1	1	1
FAGA093	0.0	338.3	PS2	P	0	0	0	0	78	230	0	1	1	1
FAGA093	0.0	345.4	PS2	P	0	0	0	0	80	230	0	1	1	1

DDH: FAGA093 UTM-N: 905,290.3 UTM-E: 592,243.9 UTM-ELEV: 1,302.8 TOTAL DEPTH: 350.5 SECTION: W 82
RFE: S2 RFE DIR: 230 PLUNGE ANGLES: 11 312 DHD CALC: 1 SS CALC: 1

DDH	F DEPTH	T DEPTH	FEAT	REC CD	PARLL	UPPER PLANE		INTERNAL PLANE		LOWER PLANE		DHD
FAGA093	5.0	17.9	B	5		0	0	0	0	0	0	1
FAGA093	17.9	23.5	G	1		99	999	0	0	0	0	1
FAGA093	23.5	29.5	B1G	5		0	0	99	999	0	0	1
FAGA093	29.5	36.0	BP	7		0	0	0	0	0	0	1
FAGA093	36.0	39.6	BG			0	0	0	0	0	0	1
FAGA093	40.4	44.8	GBP			0	0	0	0	0	0	1
FAGA093	50.4	55.7	BIG	3		0	0	0	0	0	0	1
FAGA093	0.0	76.0	1F			0	0	60	270	0	0	1
FAGA093	87.8	87.9	G			0	0	99	999	0	0	1
FAGA093	90.7	91.1	G			0	0	99	999	0	0	1
FAGA093	97.5	98.0	G			0	0	99	999	0	0	1
FAGA093	98.7	99.0	G			0	0	99	999	0	0	1
FAGA093	102.2	102.4	G			0	0	99	999	0	0	1
FAGA093	103.2	103.4	G			0	0	99	999	0	0	1
FAGA093	104.1	104.2	G			0	0	99	999	0	0	1
FAGA093	112.8	118.0	2B	3		0	0	0	0	0	0	1
FAGA093	126.5	126.8	G			0	0	99	999	0	0	1
FAGA093	0.0	126.9	1G			0	0	99	999	0	0	1
FAGA093	127.1	127.2	G			0	0	99	999	0	0	1
FAGA093	128.5	128.9	G			0	0	99	999	0	0	1
FAGA093	129.4	133.8	G	5		0	0	0	0	0	0	1
FAGA093	134.9	135.1	G			0	0	0	0	0	0	1
FAGA093	136.5	137.0	G			0	0	99	999	0	0	1
FAGA093	137.5	139.2	G			0	0	99	999	0	0	1
FAGA093	140.5	142.0	B	5		0	0	0	0	0	0	1
FAGA093	142.0	143.6	B	6		0	0	0	0	0	0	1
FAGA093	143.2	152.8	B			0	0	0	0	0	0	1
FAGA093	152.8	159.1	3BG	3		0	0	0	0	0	0	1
FAGA093	160.6	162.4	BQ	2		0	0	0	0	0	0	1
FAGA093	162.4	171.5	B			0	0	0	0	0	0	1
FAGA093	171.5	171.9	BG			0	0	0	0	0	0	1
FAGA093	175.1	179.9	BR	2		0	0	0	0	0	0	1
FAGA093	207.0	209.9	B			0	0	0	0	0	0	1
FAGA093	209.9	210.6	3BG			0	0	0	0	0	0	1
FAGA093	210.6	212.8	B			0	0	0	0	0	0	1
FAGA093	241.0	247.8	3G	3		99	999	99	999	0	0	1
FAGA093	247.8	253.6	3G	5		0	0	0	0	0	0	1
FAGA093	253.6	257.0	B			0	0	0	0	0	0	1
FAGA093	257.0	258.0	1G	5		0	0	0	0	0	0	1
FAGA093	258.0	274.3	B			0	0	0	0	0	0	1
FAGA093	290.8	291.0	G			0	0	0	0	0	0	1
FAGA093	0.0	296.6	GP			0	0	99	999	0	0	1
FAGA093	291.0	298.4	XQ			0	0	0	0	0	0	1
FAGA093	304.9	311.0	XQ			0	0	0	0	0	0	1
FAGA093	0.0	317.2	G			0	0	99	999	0	0	1
FAGA093	0.0	327.1	1G			0	0	99	999	0	0	1
FAGA093	0.0	328.5	G			0	0	99	999	0	0	1
FAGA093	333.5	333.8	G			0	0	99	999	0	0	1
FAGA093	341.0	341.4	G			0	0	0	0	0	0	1
FAGA093	343.3	343.4	G			0	0	99	999	0	0	1

DDH: FAGA093 UTM-N: 905,290.3 UTM-E: 592,243.9 UTM-ELEV: 1,302.8 TOTAL DEPTH: 350.5 SECTION: W 82
RFE: S2 RFE DIR: 230 PLUNGE ANGLES: 11 312 DHD CALC: 1 SS CALC: 1

DDH	SEGMENT NOS	COND INDICATOR
FAGA093	1	2
FAGA093	2	2
FAGA093	3	2
FAGA093	4	2
FAGA093	5	2
FAGA093	6	1

**THIS REPORT WAS REQUESTED BY: LEEP .GEOLOGY AT: 14:02:51

82 W

CYPRUS ANVIL MINING CORPORATION

Page 1 of 11

DIAMOND DRILL CORE LOG

Date: 15/16 JUNE/82

Hole Number: FAGA 093

Project: Grum

Location: Vangorda Plateau

Claim: Grum

UTM ~~Terr.~~ Plane Co-ords.: 905290.3 / 905290.7 N

transform K-A grid coordinates

592243.9 E

Grid Co-ords: L 82 S

10 N

K-A elev -10.61

Elevation: 1302.8 M

Total Depth: 350.5

Purpose: Definition drilling

Reason hole Terminated: Achieved desired depth. - boring

Reference Fabric Orientation Diagram:

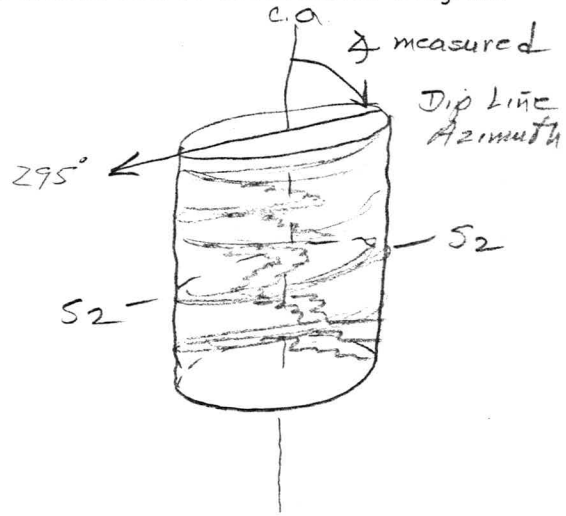

All symmetry determinations looking

N with S_2 dipping

W with dip azimuth 295°. was in(1982): → 225° below 150 m now 230 for entire hole

Logged by: DSJ/GAJ

Date(s) Logged: 15-16 June 1982

Drilling Contractor: Cameron McCutcheon

Size	CORE From	To
BWS	0	4.3
BQ	4.3	350.5

Collar Cased and Capped: No

Hole Cemented: Yes

Steel down hole: No

Started: 16 July 75 Completed: 25 July 75

Cyprus Anvil Mining Corp.

DDH FAGA093 (2 8)

Diamond Drill Core Log Date: _____ Logged By: DSJ/GAJ

Code	Drillhole	Elevation	Northing	Easting	Units (feet/metres)	R.F.E.	
1	2 8	10 16	17 24	25 32	34 39	41 42	
T	FAGA093	1302.8	9052903	592243.9	METERS	S2	

LCP - June 23/1983

Code	Drillhole	Depth	Zenith Angle	True Azimuth	Comments
1	2 8	10 14	22 26	28 32	34 56
R	FAGA093	600.0	189.0	99.0	AT COLLAR
R	FAGA093	610	175.0	113.0	
R	FAGA093	1219	169.0	113.0	
R	FAGA093	1951	163.8	124.0	
R	FAGA093	2621	162.8	117.0	
R	FAGA093	3353	168.0	158.0	

Code	Drillhole	Comments, Errant Remarks, Snivellings and / or Lewd Suggestions
1	2 8	10 56

Section 82W

DDH F A G A 0 9 3 (2–8)

Cyprus Anvil Mining Corp.

Lithologic Log

Date: 15-16/June 82 Logged By: DSJ / GJ / MM

Code	From	To	Recov.	No.	Unit	Description
1	10–14	16–20	22–24	26–28	30–34	35
L	00	50		1	*	overburden
L	50	179		2	5B0	(5D0) only 50% core recovery -
						core broken throught
L	179	235		3	5B6	UNIT ENTIRELY GOUGED, UPPER CONTACT //S2
						LOWER CONTACT INDETERMINATE, VERY HEAVY
						CORE LOSS, 10% recovery
L	235	295		4	5D0	SECTION VARIABLY GOUGED, //S2, UPPER
						CONTACT INDETERMINATE DUE TO VERY HEAVY
						CORE LOSS in 1st ½ of interval, intern
						gauge //S2 approx.
L	295	298		5	5B86	core very broken
L	298	360		6	5D*	DOLO, UPPERPORT OADLY BROKEN, 50%
						core recovery in 1st 4 meters
L	360	396		7	5B6	(5D0) core heavily broken + gouged
						contacts indeterminate
L	396	404		8	5D0	
L	404	407		9	5D0	gouge, contacts indeterminate
L	407	427		10	5B0	(5D0) section heavily gouged, 50%
						recovery contacts indeterminate
L	427	448		11	5B0	emerging from gouged core
L	448	456		12	5D0	NO GOUGE
L	456	484		13	5B0	" " wow what a thrill!
L	484	504		14	5D0	
L	504	557		15	5B0	from 50.9 to 53.7 core mainly OQO,
						frags + minor gouge with 30%
						core recovery, minor pyrite in
						OQO
L	557	589		16	5D3	(5B0) 90:10
L	589	615		17	5B0	(5D0) 80:20
L	615	660		18	5D3	(5B0) 90:10
L	660	710		19	5B0	(5D0) 90:10
L	710	766		20	5D0	(5C*) ankeritic, minor "fuchite".
						At 76.0 there is a small fault with
						altitude 60/270 which appears
						to be a thrust
L	766	772		21	4D0	

DDH F.A.G.A.0.9.3. (2 — 8)

Cyprus Anvil Mining Corp.

Lithologic Log

Date: 15-16/June 82 Logged By: DSJ/GJ/MM

Code	From	To	Recov.	No.	Unit	Description
1	10 14	16 20	22 24	26 28	30 34	35
L	717 2	785	✓	22	4A4	(5D*) 15cm of 5D*
L	785	791	✓	23	5D4*	ankeritic, abundant "fuchsite"
L	791	812	✓	24	4A4	(5D4*) ankeritic, name longer than unit ie 8cm of 5D
L	812	813	✓	25	5D4*	
L	813	819	✓	26	4A0	
L	819	823	✓	27	5D4*	ankeritic
L	823	842		28	4A0	(4C5) 50:50, grade pathetic!!
L	842	848	✓	29	4L1	±2
L	848	865	✓	30	4C5	
L	865	873	✓	31	4L12	± 4
L	873	878	✓	32	4A0	(000)
L	878	879	✓	33	4A0	gouged //S_2
L	879	897		34	3G9	
L	887	1066		35	3G0	gouge from 90.7 to 91.1, 97.5 to 98.0, 98.7 to 99.0, 102.2 to 102.4, 103.2 to 103.4, 104.1 to 104.2 in all cases gouge appears to //S_2 but most contacts indeterminate, minor sphalerite with 5cm quartz vein at 94.2, minor sphalerite with quartz stringers near 96.9, scattered po. bearing quartz stringers thru out interval
L	1066	1128		36	4C5	
L	1128	1294		37	3G0	± 9' "calc-silicate like" weakly calcareous sections, from 112.8 to 118.0 core very broken, 30% core recovery poss. fault implied, 126.5 to 126.8 core heavily gouged //S_2, near 126.9 5cm gouge //S_2, 127.1 to 127.2 //S_2 gouge, 128.5 to 128.9 //S_2 gouge,
L	1294	1338		38	4L0	(360) heavily gouged thru out 50% core recovery
L	1338	1359		39	3G0	± 9, 134.9 to 135.1 gouge, contacts indeterminate

note: this unit is drastically different from the ankeritic unit above and the ore horizon

DDH FAGA093 (2–8)

Cyprus Anvil Mining Corp.

Lithologic Log

Date: 15-16/June 82 Logged By: DSJ/GJ/MM

Code	From	To	Recov.	No.	Unit	Description
1	10–14	16–20	22–24	26–28	30–34	35
L	1359	1365		40	5D4*	ankeritic, minor "fuchite"
L	1365	1370		41	5D4*	(3G0) section mashed beyond recognition, entirely gouged, appears //S2
L	1370	1375		42	4E4	± calcite
L	1375	1392		43	5D4*	GOUGE appears //S2 abundant "fuchite"
L	1392	1405		44	4A41	
L	1405	1420		45	5D4*	(4L1) core badly broken, 50% core recovery
L	1420	1436		46	4E465	(4L1) [5D4] core broken, 60% core recovery
L	1436	1461		47	3G9	(5D*) 90:10
L	1461	1470		48	5D4*	
L	1470	1480		49	4A0	(4D0
L	1480	1482		50	4D0	
L	1482	1745		51	3G39	[5A0] (3G0)(4L0) whole section is severely broken, 152.8 to 159.1 core very heavily broken, mosk graphitic rocks in this interval 30% core recovery, minor pyrrite-sphalerite near 158 as frag in gouge, assume major fault in interval, all contacts indeterminate, 157.6 to 159.1 nothing but pebbles & gouge with above mentioned sulphide frags 160.6 to 162.4 has 20% core recovery, 80% of which is quartz vein frags. 171.5 to 171.9 broken core + gouge zone, contact indeter
L	1745	1751		52	5D4*	(3G0) ankeritic 70:30
L	1751	1799		53	3G0	± 9 25% core recovery with much rubble and broken core, no poss. of attitudes
L	1799	1844		54	4L1	(5D4*) (5A6) 3cm 4E0 near end.
L	1844	1850		55	5C4*	ankeritic
L	1850	1853		56	4E0	(5C4*)
L	1853	1855		57	5A19	

DDH FAG4093 (2–8)

Cyprus Anvil Mining Corp.

Lithologic Log

Date: 17 June/82 Logged By: DSJ/GJ/MM

Code	From	To	Recov.	No.	Unit	Description
1	10–14	16–20	22–24	26–28	30–34	35
L	1855	1882		58	5D0	[5C0].
L	1882	1929		59	5C0	distinctive mottled green & white texture
						of altered metabasites
L	1929	1957		60	5D0	[5C4 *][5B8]
L	1957	1970		61	5B86	
L	1970	2002		62	3G0	
L	2002	2035		63	3G9	± 3
L	2035	2070		64	3G0	(3G9)
L	2070	2128		65	5A0	± 3 several pyritic & silicious
						bands attempting to make 4A0
						but failing dismally, core broken
						thru out interval esp. 209.9 to
						210.6 which is mostly gouge with
						indeterminate contacts, this
						appears to be a case of
						lithologically controlled gouging,
						little core loss
L	2128	2143		66	5CD4*	
L	2143	2147		67	5A0	
L	2147	2196		68	5D*	(3G0 ±9)
L	2196	2213		69	5B8	
L	2213	2227		70	3G0	±9
L	2227	2232		71	3G0	cut by what appear to be Po
						+ Cpy veinlets + disseminations,
						section averages 20% Po, less
						than ½ % Cu
L	2232	2309		72	3G0	± 9, ± 3
L	2309	2314		73	5D3	
L	2314	2338		74	3G0	±8, ±9, ± 3
L	2338	2344		75	5D3	
L	2344	2379		76	3G0	±9, (3B3)[5D3] section cut
						by numerous calcite veinlets,
						but no formational calcite
L	2379	2410		77	5D3	(3G0) 95:5
L	2410	2478		78	3G0	(5D4) sect. heavily gouged. upper contact
						appears // S_2 however shears dipping
						45° occur as well internal gouge
						appears // S_2 only 30% core recovery

DDH EAGA093 (2 / 8) Cyprus Anvil Mining Corp. Page 7 of 11

Lithologic Log Date: 17 June 82 Logged By: DSJ/GV/MM

Code	From	To	Recov.	No.	Unit	Description
1	10 14	16 20	22 24	26 28	30 34	35
L	247.8	253.6		78	5A6	section heavily gouged. 50% core recovery, contacts indeterminate
L	253.6	271.43		79	5A0	257 to 258 minor gouge, indeterminate contact, no major core loss, but core more broken than normal for the less carbonaceous lithol. in this hole.
L	271.43	280.4		80	5A*	± 3 ankeritic, lighter coloured than overlying section due to quartz carbonate interlayering but still has fairly carbonaceous folia, generally not marking finger
L	280.4	285.0		81	5D4*	ankeritic (5A0)(5A6)(5C) 60:20:15, remainder is quartz vein near base with minor sphalerite
L	285.0	289.3		82	5A1	(36 ± 9)(000), 30:40:30
L	289.3	289.7		83	4E4	
L	289.7	291.08		84	4L21	4 (5A19)
L	291.08	298.4		85	3G4	± 9 (4L2) unit is extensively brecciated with quartz + carbonate healing bearing minor Po, Py + Sphal, short gouge sections 290.8 to 291, near 296.6 where there appears to be at least 1 meter core loss gouge appears // S_2 but contacts mostly indeterminate,
L	298.4	301.9		86	4C5	approaching 4L14
L	301.9	302.1		87	5D4*	
L	302.1	302.7		88	4F46	* calcite
L	302.7	303.5		89	5D4*	ankeritic
L	303.5	304.9		90	4C5	(4L124)(4C0) sub equal amounts
L	304.9	319.8		91	3G0	top ½ unit is slightly brecciated + quartz carbonate sulphide vein similar to the unit 85 but less intensely, 10cm gouge // S_2 at 317.2

Symmetrical

DDH FAGA093 (2 / 8)

Cyprus Anvil Mining Corp.

Lithologic Log

Date: 17 June 82 Logged By: DSI/GJ/MM

Code	From	To	Recov.	No.	Unit	Description
1	10 14	16 20	22 24	26 28	30 34	35
L	3198	3220		92	4L0	± 7
L	3220	3250		93	3G8	[5D6] otherwise known as gray-green phyllites
L	3250	3410		94	3G0	minor //S_2 gouge at 327.1 10cm thick, 10cm of //s. gouge at 328.5, 30cm of gouge sub parallel to S_2 at 333.5 to 333.8
L	3410	3414		95	3G0	gouge sub //S_2 prob.
L	3414	3446		96	3G0	//S_2 gouge at 343.3 to 343.4
L	3446	3480		97	3G4	approaching 4L0
L	3480	3485		98	4A4	(4H4) unsplit
L	3485	3505		99	4L0	± 2, ± 4
						350.5 = EOH

DDH FAGA093 (2–8) **Cyprus Anvil Mining Corp.** Page 9 of 11

Structural Log Date: 16 June 82 Logged By: GS

Code	From	To	Feature	sym	S_0 Dip Direct.	S_1 Dip Direct.	S_2 Dip Direct	Description
1	10 14	16 20	22 24	26	28 32	34 38	40 44	
S		135	C,S,2				45 295	
S		355	C,S,2				58	
S		461	C,S,2				72	
S		555	C,S,2				62	
S		633	C,S,2				70	
S		740	C,S,2				67	
S		810	C,S,2				67	
S		852	C,S,2				58	
S		922	C,S,2				65	
S		1000	I,N,D	P			68	
S		1085	C,S,2				72	
S		1200	C,S,2				76	
S		1213	C,S,2				72	
S		1395	C,S,2				70	
S		1454	I,N,D	P			76	
S		1513	C,S,2				75 295	
S		1710	C,S,2				77 225	
S		1741	I,N,D	P			80	
S		1885	I,N,D	P			72	
S		1945	I,N,D	P			80	
S		2000	I,N,D	P			64	
S		2066	I,N,D	P			80	
S		2138	I,N,D	P			80	
S		2226	C,S,2				75	
S		2317	C,S,2				80	
S		2374	I,N,D	P			72	
S		2538	I,N,D	P			75	
S		2657	I,N,D	P			72	
S		2698	I,N,D	P			64	
S		2753	I,N,D	P			73	
S		2842	I,N,D	P			60	
S		2987	I,N,D	P			75	
S		3058	I,N,D	P			72	
S		3136	I,N,D	P			68	
S		3192	I,N,D	P			62	
S		3264	I,N,D	P			72 225	

DDH FAGA093 (2 — 8)

Cyprus Anvil Mining Corp.

Structural Log

Date: 16 June/82 Logged By: GS

Code	From	To	Feature	Sym	S_0 Dip Direct.	S_1 Dip Direct.	S_2 Dip Direct	Description
	10 — 14	16 — 20	22 — 24	26	28 — 32	34 — 38	40 — 44	
V		332 6	IND	P			72 225	
S		338 3	IND	P			78	
S		341 5 4	IND	P			80 225	

DDH FAGA093 (2–8) Cyprus Anvil Mining Corp

Page 11 of 11

Logged by GJ / DSS

ASSAY LOG (SAMPLER'S COPY) Date 17 June 82 Sampled by

CODE	FROM	TO	SAMPLE	INTR.	REC (m)	UNIT	DESCRIPTION	KA #'s
1	10–14	16–20	22–26	28–30	32–34	36–40	42	
P	7165	7171	125131	06	06	4D0		2540
P	7171	7185	125132	14	13	4A4		2540
P	7991	8055	125133	14	14	4AH	5D4 95:5	2541
P	8055	8119	125134	14	14	4AH	(4AD)(5D4) 60:40:10	2541
P	10666	10877	125135	21	20	4CS		2544
P	10877	11108	125136	21	20	4CS		2544 & 2545
P	11108	11128	125137	20	20	HCS		2545
P	13370	11375	125138	05	05	HEH		
P	13921	14105	125139	13	07	HAH		
P	14201	14366	125140	16	08	HEH6	5(4L1)(5D4)	2552
P	28931	28997	90457	04	02	HEH		2546
P	28997	29108	90458	11	05	HLH12	4(5A19)	2546
P	29184	30101	125143	17	16	4CS	[→4L14]	2547
P	30101	30119	125144	18	17	4CS	[→4L14]	2548
P	30121	30277	125145	06	06	4E4H6	* calc	2549
P	30355	30497	125146	14	13	4CS	(4L124)(4C0)	2550
P	34505	34855	125147	05	05	4AH	(4H4)	

2546 samples of this interval

C.A.M.C. 1981 - E - 5

Note 12541 and 12542 tags were voided

DDH FAGA093 (2–8) **Cyprus Anvil Mining Corp.** Page _____ of _____

Structural Log Date: _____ Logged By: _____

Code	From	To	Feature	Sym	S_0 Dip Direct.	S_1 Dip Direct.	S_2 Dip Direct	Description
1	10–14	16–20	22–24	26	28–32	34–38	40–44	
	50	179	B	5				
	179	235	G	1	11 S_2			
	235	295	B1G	5		11 S_2		
	295	360	BP	7				
	360	396	BG					
	404	448	GBP					
	504	557	B1G	3				
		760	1F			60 270		
	878	879	G			11 S_2		
	907	911	G			11 S_2		
	975	980	G			11 S_2		
	987	990	G			11 S_2		
	1022	1024	G			11 S_2		
	1032	1034	G			11 S_2		
	1041	1042	G			11 S_2		
	1128	1180	2B	3				
	1265	1268	G			11 S_2		
		1269	1G			11 S_2		
	1271	1272	G			11 S_2		
	1285	1289	G			11 S_2		
	1294	1338	G	5				
	1349	1351	G					
	1365	1370	G			11 S_2		
	1375	1392	G			11 S_2		
	1405	1420	B	5				
	1420	1436	B	6				
	1482	1528	B					
	1528	1591	3BG	3				
	1606	1624	BQ	2				
	1624	1715	B					
	1715	1719	BG					
	1751	1799	BR	2				
	2099	2106	3BG					
	2070	2099	B					
	2106	2128	B					
	2410	2478	3G	3	11 S_2	11 S_2		

B 1G B

DDH EA6A093 (2 8)

Cyprus Anvil Mining Corp.

Structural Log

Page _____ of _____

Date: _____ Logged By: _____

Code	From	To	Feature	Sym	S_0 Dip Direct.	S_1 Dip Direct.	S_2 Dip Direct	Description
1	10 14	16 20	22 24	26	28 32	34 38	40 44	
	2478	2536	3G	S				
	2570	2580	1G					
	2536	2570	B					
	2580	2743	B					
	2910	2984	XQ					
	2908	2910	G					
		2966	GP			$11S_2$		
	3049	3110	XQ					
		3172	G			$11S_2$		
		3271	1G			$11S_2$		
		3285	G			$11S_2$		
	3335	3338	G			$11S_2$		
	3410	3414	G					
	3433	3434	G			$11S_2$		

DDH: FAGA093 -- 42 DEGREE PROFILE

(VIEW AZIMUTH = 312 DEGREES)

ELEV:1303 592244E ; 905290N

PLUNGE ANGLE IS 11.0 TREND ANGLE IS 312.0

CORRECTED COLLAR POSITION: X = 679.1 Z = 1314.6

SECTION NAME: 80W

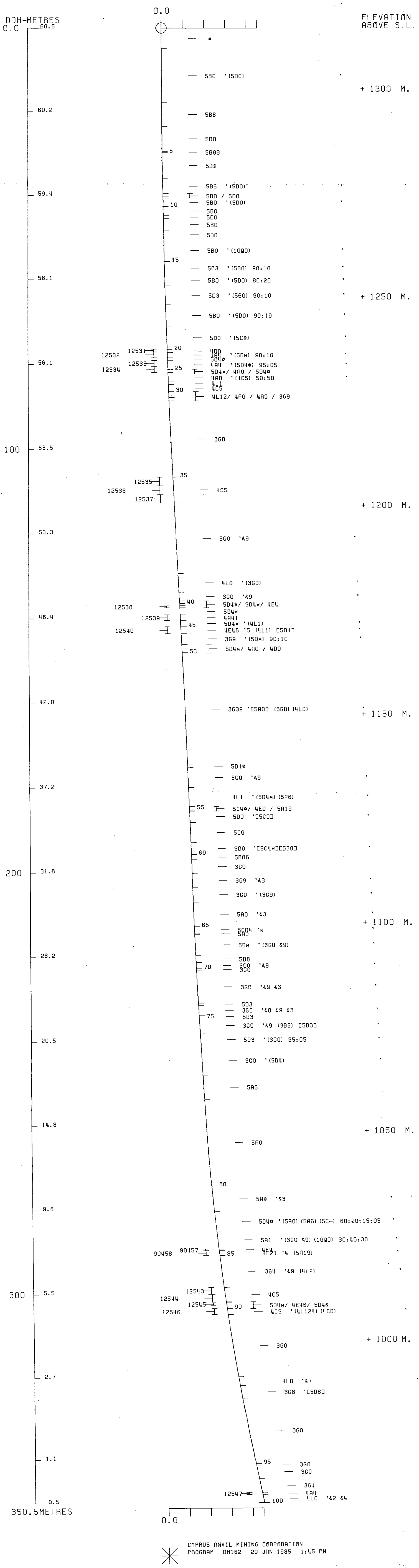

CYPRUS ANVIL MINING CORPORATION
PROGRAM DH162 29 JAN 1985 1:45 PM

DDH: FAGA093 -- 42 DEGREE PROFILE

(VIEW AZIMUTH = 312 DEGREES)

ELEV: 1303 592244E ; 905290N

PLUNGE ANGLE IS 11.0 TREND ANGLE IS 312.0

CORRECTED COLLAR POSITION: X = 679.1 Z = 1314.6

SECTION NAME: 80W

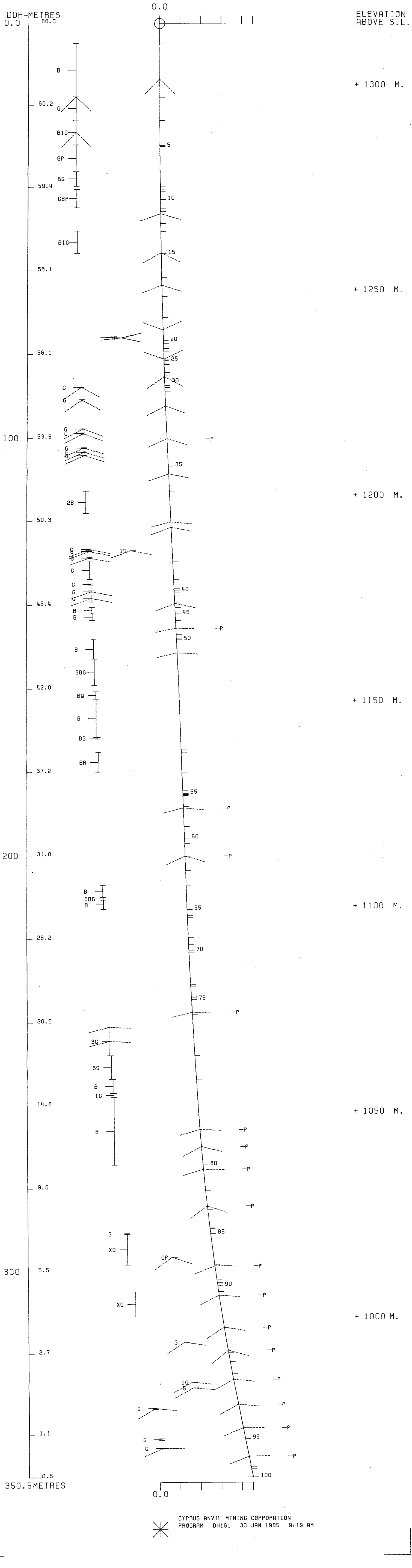

CYPRUS ANVIL MINING CORPORATION
PROGRAM DH161 30 JAN 1985 9:19 AM

76 A160

80 W
CONT

DRILL HOLE : FAGA160

NORTHING : 905,226.7

EASTING : 592,262.5

ELEVATION : 1,301.7

TOTAL DEPTH : 145.1

SECTION : W 80

R.F.E. : S2

RFE DIRECTION: 230

PLUNGE ANGLE : 11

PLUNGE DIRECT: 312

DHD CALC: 1

SS CALC: 0

DETAIL RECORD COUNTS:

NOS ORE-SAMPLES: 27

NOS DOWN-H-SURVEYS: 3

NOS DOWN-H-LITHOLOGY: 50

NOS DOWN-H-STRUCTURE: 42

NOS DOWN-H-FAULTS: 20

NOS DOWN-H-SPLINES: 3

NOS COMPOSITES: 0

DDH: FAGA160 UTM-N: 905,226.7 UTM-E: 592,262.5 UTM-ELEV: 1,301.7 TOTAL DEPTH: 145.1 SECTION: W 80
RFE: S2 RFE DIR: 230 PLUNGE ANGLES: 11 312 DHD CALC: 1 SS CALC: 0

DEPTHS FROM	DEPTHS TO	SAMPLE NO.	INT.	REC.	ROCK UNIT	S.G. PULP	CU %	PB %	ZN %	AG(AA) G/MT	AG(FA) G/MT	AU(FA) G/MT	PO %	PY %	TOT FE	BAO %	HG %	MN %	AS %	BA %	S.G. W.R.
49.2	51.5	08332	2.3	2.2	4A0	2.99	.01	1.39	3.10	29.00		.48		5	6						
51.5	54.0	08333	2.5	1.5	4A0	2.95	.01	1.56	5.00	39.00		.55		5	5						
54.0	56.1	08334	2.1	1.0	4A0	3.11	.01	2.07	5.70	47.00		.75	1	8	9						
65.9	68.0	08335	2.1	2.0	4A0	3.15	.03	2.50	5.70	43.00		.75	3	8	11						
68.0	70.2	08336	2.2	2.2	4DA4	3.16	.04	2.80	4.80	50.00		.89	2	8	10						
71.3	73.5	08337	2.2	2.1	4A4	3.18	.02	4.10	9.40	80.00	73.00	.75	1	12	14						
73.5	75.7	08338	2.2	2.2	4A4	3.10	.04	3.90	5.40	65.00		.75	2	7	9						
79.2	81.1	08339	1.9	1.8	4C0		.07	.94	1.22	19.00											
84.3	86.0	08340	1.7	1.6	4C0	2.89	.04	1.08	1.71	20.00		.48	2	2	4						
86.0	87.8	08341	1.8	1.6	4C0	2.95	.05	.99	1.11	19.00		.69	2	3	6						
88.6	90.3	08342	1.7	1.7	4B0	2.89	.04	.73	.88	18.00		.27	2	2	5						
95.6	97.5	08343	1.9	1.9	4A4	2.99	.02	1.70	5.10	28.00		.27	3	1	5						
97.5	99.5	08344	2.0	1.0	4A0	2.88	.02	1.01	2.30	17.00		.27	3	1	4						
99.5	101.5	08345	2.0	1.2	4A4	2.94	.02	1.81	4.00	30.00		.34	1	3	5						
101.5	102.1	08346	.6	.6	4ED	3.66	.06	1.97	5.20	34.00		.48	2	22	24						
108.6	110.0	08347	1.4	.0	4A0	2.99	.02	1.38	3.20	27.00		.55		5	5						
110.0	112.0	08348	2.0	2.0	4A0	2.95	.05	1.84	2.90	35.00	35.00	1.03		13	14						
112.0	113.7	08349	1.7	1.6	4A0	3.14	.05	.47	1.02	12.00		.48		11	11						
116.8	118.3	08350	1.5	1.5	4L4		.04	.60	.49	10.00											
118.3	119.8	08351	1.5	1.1	4L4		.08	.51	.77	12.00											
120.6	121.8	08352	1.2	1.2	4D0	3.02	.03	1.85	3.80	25.00		.21	2	2	4						
121.8	123.4	08353	1.6	1.6	4H14	3.55	.08	2.90	6.50	58.00		.41	13	8	22						
123.4	125.2	08354	1.8	1.8	4D0	2.52	.10	3.30	5.00	60.00		1.03	2	9	12						
125.2	126.9	08355	1.7	1.7	4D0	3.11	.05	3.20	5.70	55.00		.55	3	5	8						
129.4	130.8	08356	1.4	1.4	4D0	3.05	.03	1.98	4.60	33.00		.48	3	3	6						
130.8	132.0	08357	1.2	1.0	4A4	2.88	.03	1.50	3.90	23.00		.27	1		2						
132.0	134.1	08358	2.1	1.6	4D0	3.53	.07	3.20	5.60	46.00		.41	5	9	15						
WEIGHTED AVERAGE																					
49.2	56.1		6.9	4.7		3.01	.01	1.65	4.57	33.10		.58	1	6	7						
65.9	70.2		4.3	4.2		3.15	.03	2.65	5.23	46.58		.82	2	8	11						
71.3	75.7		4.4	4.3		3.14	.03	4.00	7.40	72.50	36.50	.75	1	9	11						
79.2	81.1		1.9	1.8			.07	.94	1.22	19.00											
84.3	87.8		3.5	3.2		2.92	.04	1.03	1.40	19.48		.58	2	3	5						
88.6	90.3		1.7	1.7		2.89	.04	.73	.88	18.00		.27	2	2	5						
95.6	102.1		6.5	4.7		3.00	.02	1.54	3.90	25.76		.31	2	4	6						
108.6	113.7		5.1	3.6		3.02	.04	1.25	2.35	25.13	13.72	.71		10	11						
116.8	119.8		3.0	2.6			.06	.55	.63	11.00											
120.6	126.9		6.3	6.3		3.03	.06	2.89	5.34	51.47		.58	5	6	12						
129.4	1 1		4.7	4.0		3.22	.04	2.40	4.86	36.25		.39	3	5	9						

DDH: FAGA160 UTM-N: 905,226.7 UTM-E: 592,262.5 UTM-ELEV: 1,301.7 TOTAL DEPTH: 145.1 SECTION: W 80
RFE: S2 RFE DIR: 230 PLUNGE ANGLES: 11 312 DHD CALC: 1 SS CALC: 0

DEPTHS FROM	DEPTHS TO	SAMPLE NO.	INT. REC.	ROCK UNIT	S.G. PULP	ASSAYS CU %	PB %	ZN %	AG(AA) G/MT	AG(FA) G/MT	AU(FA) G/MT	PO %	PY %	TOT FE	BAO %	HG %	MN %	AS %	BA %	S.G. W.R.

DDH: FAGA160 UTM-N: 905,226.7 UTM-E: 592,262.5 UTM-ELEV: 1,301.7 TOTAL DEPTH: 145.1 SECTION: W 80
RFE: S2 RFE DIR: 230 PLUNGE ANGLES: 11 312 DHD CALC: 1 SS CALC: 0

DEPTH	ZENITH	AZIMUTH
0.000	180.000	0.000
61.300	179.000	148.600
122.200	175.500	139.400

DDH: FAGA160 UTM-N: 905,226.7 UTM-E: 592,262.5 UTM-ELEV: 1,301.7 TOTAL DEPTH: 145.1 SECTION: W 80
RFE: S2 RFE DIR: 230 PLUNGE ANGLES: 11 312 DHD CALC: 1 SS CALC: 0

DEPTH	UNIT	CODE	DESC	RECOVERY	IND
6.7	0001	#		0.0	1
9.5	0002	5BO		0.0	1
10.0	0003	5DO		0.0	1
14.7	0004	5B2C	(5AO)	0.0	1
17.7	0005	5DC		0.0	1
20.0	0006	5B26	9$	0.0	1
32.6	0007	5DO		0.0	1
38.8	0008	532	&O&$	0.0	1
42.8	0009	5DO	(5BO) MINOR	0.0	1
44.5	0010	58O		0.0	1
47.6	0011	5CO		0.0	1
49.2	0012	5B$		0.0	1
56.1	0013	4AC		0.0	1
57.1	0014	5D4$		0.0	1
60.4	0015	5D4@		0.0	1
61.0	0016	5B62		0.0	1
62.2	0017	5D4*		0.0	1
65.2	0018	5B*		0.0	1
65.9	0019	5D4*		0.0	1
69.2	0020	4DO		0.0	1
70.2	0021	4A24		0.0	1
71.3	0022	5D4@		0.0	1
75.7	0023	4A4		0.0	1
79.2	0024	5C4$	(4CO)	0.0	1
81.1	0025	4CO		0.0	1
84.3	0026	5C4*		0.0	1
87.8	0027	4CO		0.0	1
88.6	0028	5C4@		0.0	1
90.3	0029	4BO		0.0	1
93.9	0030	5C4@		0.0	1
94.3	0031	4A4		0.0	1
95.6	0032	5D4@		0.0	1
101.5	0033	4AO	&4	0.0	1
102.1	0034	4EC		0.0	1
108.1	0035	5C4$		0.0	1
108.8	0036	4DO		0.0	1
113.7	0037	4AO		0.0	1
114.3	0038	5D4@		0.0	1
116.8	0039	5A6		0.0	1
119.8	0040	4L4		0.0	1
120.6	0041	5C4@		0.0	1
121.8	0042	4DO		0.0	1
123.4	0043	4H14	[4J7] (5D4*)	0.0	1
126.9	0044	4DO	(4CO)	0.0	1
129.4	0045	5C4$		0.0	1
130.8	0046	4DO	(5DO) MINOR	0.0	1
132.0	0047	4A4		0.0	1
134.1	0048	4DC	&7 [4E4(4A4)]	0.0	1
136.1	0049	5B62		0.0	1
145.1	0050	5B6	->5B62	0.0	1

DOWN-HOLE STRUCTURE (DH020)

DDH: FAGA160 UTM-N: 905,226.7 UTM-E: 592,262.5 UTM-ELEV: 1,301.7 TOTAL DEPTH: 145.1 SECTION: W 80
RFE: S2 RFE DIR: 230 PLUNGE ANGLES: 11 312 DHD CALC: 1 SS CALC: 0

DDH	F DEPTH	T DEPTH	FEAT	SYMTRY	S0 ANGLE	S0 DIRECT	S1 ANGLE	S1 DIRECT	S2 ANGLE	S2 DIRECT	RFE CDE	DHDC	SDC	PROCESS
FAGA160	0.0	9.7	CS2		0	0	0	0	79	230	0	1	0	0
FAGA160	0.0	13.5	CS2		0	0	0	0	76	230	0	1	0	0
FAGA160	0.0	19.1	CS2		0	0	0	0	70	230	0	1	0	0
FAGA160	9.7	23.4	CS2	S	0	0	0	0	0	0	0	1	0	0
FAGA160	0.0	25.3	CS2		0	0	0	0	81	230	0	1	0	0
FAGA160	23.4	26.0	FZ	Z	0	0	0	0	0	0	0	1	0	0
FAGA160	0.0	31.7	CS2		0	0	0	0	74	230	0	1	0	0
FAGA160	0.0	38.7	CS2		0	0	0	0	80	230	0	1	0	0
FAGA160	26.0	38.8	CS2	S	0	0	0	0	0	0	0	1	0	0
FAGA160	38.8	39.8	CS2	Z	0	0	0	0	0	0	0	1	0	0
FAGA160	39.8	40.2	CS2	S	0	0	0	0	0	0	0	1	0	0
FAGA160	40.2	41.5	CS2	Z	0	0	0	0	0	0	0	1	0	0
FAGA160	41.5	43.6	CS2	S	0	0	0	0	0	0	0	1	0	0
FAGA160	0.0	45.6	CS2		0	0	0	0	0	0	0	1	0	0
FAGA160	0.0	49.2	CS2		0	0	0	0	75	230	0	1	0	0
FAGA160	43.6	49.2	CS2	Z	0	0	0	0	82	230	0	1	0	0
FAGA160	49.2	56.1	PS2	P	0	0	0	0	0	0	0	1	0	0
FAGA160	0.0	57.6	CS2		0	0	0	0	0	0	0	1	0	0
FAGA160	0.0	63.0	CS2		0	0	0	0	69	230	0	1	0	0
FAGA160	56.1	64.6	CS2	S	0	0	0	0	68	230	0	1	0	0
FAGA160	64.6	65.9	CS2	Z	0	0	0	0	0	0	0	1	0	0
FAGA160	0.0	71.2	PS2		0	0	0	0	0	0	0	1	0	0
FAGA160	0.0	75.3	PS2		0	0	0	0	74	230	0	1	0	0
FAGA160	65.9	75.7	PS2	P	0	0	0	0	67	230	0	1	0	0
FAGA160	0.0	76.8	CS2		0	0	0	0	0	0	0	1	0	0
FAGA160	75.7	79.2	CS2	S	0	0	0	0	68	230	0	1	0	0
FAGA160	79.2	81.1	PS2	P	0	0	0	0	0	0	0	1	0	0
FAGA160	0.0	81.6	CS2		0	0	0	0	0	0	0	1	0	0
FAGA160	81.1	84.3	CS2	S	0	0	0	0	72	230	0	1	0	0
FAGA160	0.0	88.0	PS2		0	0	0	0	0	0	0	1	0	0
FAGA160	0.0	97.1	PS2		0	0	0	0	72	230	0	1	0	0
FAGA160	84.3	102.1	PS2	P	0	0	0	0	55	230	0	1	0	0
FAGA160	0.0	104.7	CS2		0	0	0	0	0	0	0	1	0	0
FAGA160	102.1	108.1	CS2	S	0	0	0	0	77	230	0	1	0	0
FAGA160	0.0	115.4	PS2		0	0	0	0	0	0	0	1	0	0
FAGA160	0.0	120.6	PS2		0	0	0	0	75	230	0	1	0	0
FAGA160	0.0	127.4	PS2		0	0	0	0	74	230	0	1	0	0
FAGA160	0.0	131.0	PS2		0	0	0	0	52	230	0	1	0	0
FAGA160	108.1	136.1	PS2	P	0	0	0	0	74	230	0	1	0	0
FAGA160	0.0	137.5	CS2		0	0	0	0	0	0	0	1	0	0
FAGA160	0.0	144.0	CS2		0	0	0	0	60	230	0	1	0	0
FAGA160	136.1	145.1	CS2	S	0	0	0	0	50	230	0	1	0	0
									0	0	0	1	0	1

DDH: FAGA160 UTM-N: 905,226.7 UTM-E: 592,262.5 UTM-ELEV: 1,301.7 TOTAL DEPTH: 145.1 SECTION: W 80
RFE: S2 RFE DIR: 230 PLUNGE ANGLES: 11 312 DHD CALC: 1 SS CALC: 0

DDH	F DEPTH	T DEPTH	FEAT	REC CD	PARLL	UPPER PLANE		INTERNAL PLANE		LOWER PLANE		DHD
FAGA160	0.0	16.1	G			0	0	0	0	0	0	1
FAGA160	0.0	17.2	1G			0	0	0	0	0	0	1
FAGA160	0.0	17.5	1G			0	0	0	0	0	0	1
FAGA160	0.0	17.7	1G			0	0	0	0	0	0	1
FAGA160	0.0	23.7	1G			0	0	0	0	0	0	1
FAGA160	24.2	24.5	G			0	0	0	0	0	0	1
FAGA160	0.0	25.8	G			0	0	0	0	0	0	1
FAGA160	54.9	56.1	P	0		0	0	0	0	0	0	1
FAGA160	56.1	57.1	G			0	0	0	0	69	0	1
FAGA160	0.0	71.1	1G			0	0	0	0	0	0	1
FAGA160	94.3	95.0	G			0	0	0	0	0	0	1
FAGA160	95.6	102.7	X			0	0	0	0	0	0	1
FAGA160	111.3	113.7	X			0	0	0	0	0	0	1
FAGA160	113.7	114.3	G			75	0	0	0	75	0	1
FAGA160	134.1	136.1	GF			0	0	0	0	0	0	1
FAGA160	0.0	136.6	G			0	0	0	0	0	0	1
FAGA160	138.4	138.7	GX			0	0	0	0	0	0	1
FAGA160	0.0	142.5	G			0	0	0	0	0	0	1
FAGA160	142.8	143.8	G			0	0	0	0	0	0	1
FAGA160	144.5	145.1	GF			0	0	0	0	0	0	1

CYPRUS ANVIL MINING CORPORATION

DIAMOND DRILL CORE LOG

Hole Number: 76-A160

Project: GRUM

Location: VANGORDA PLATEAU

Claim: _____

UTM
Terr. Plane
Co-ords.: 6,905,226.67 N

592,262.50 E

Grid
Co-ords.: 80W/9N

_____

Elevation: 1301.70

Total Depth: 145.1 m

Fabric Orientation Diagram:

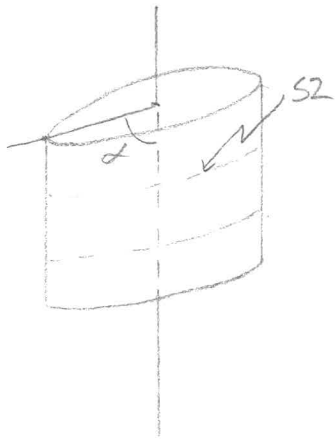

All symmetry determinations looking

NW with S2 dipping

SW with dip azimuth 230.

Purpose: _____

Logged by: PN Date(s) Logged: JUNE 15-17

Drilling
Contractor: _____ Core: Size From To Collar Cased and Capped: ____

Size	From	To
BQ	0	EOH

Started: 18/9/76 Completed: 21/9/76

80w

Cyprus Anvil Mining Corp.
Diamond Drill Core Log

DDH 75-A160

Code	Drillhole	Elevation	Northing	Easting	Comments
1	2 8	10 16	17 24	25 32	34 48
T	75-A160	1301.7	9052262.7	592262.5	METRES

Code	Drillhole	Depth	Zenith Angle	True Azimuth	Comments
1	2 8	10 14	22 26	28 32	34 56
R	75-A160	0.0	180.0	0.0	ATCOLLAR
R	75-A160	61.3	179.0	148.6	CALCULATED FROM
R	75-A160	122.2	175.5	139.4	A76 & A79
R		.	.	.	
R		.	.	.	
R		.	.	.	
R		.	.	.	
R		.	.	.	
R		.	.	.	
R		.	.	.	
R		.	.	.	
R		.	.	.	
R		.	.	.	
R		.	.	.	
R		.	.	.	
R		.	.	.	

Code	Drillhole	Comments, Errant Remarks, Snivellings and/or Lewd Suggestions
1	2 8	10 47

DDH 76-A160 (2 / 8)

Cyprus Anvil Mining Corp.
Lithologic Log

Logged By: PN

Code	From	To	Unit	Code	Description
1	10 14	16 20	22 23	25 27	
L	000	167	1		o/B
OK L	167	95	2	5B10	minor py, po blebs, qtz lenses
OK L	95	1100	3	5D10	thin qtz bands; minor py w/ lesser po blebs
L	1100	1147	4	5B20 (5A0) 5A10	minor py in thin qtz bands & assoc w/ qtz-calcite lenses;
OK L	1147	1177	5	5D10	gouge from 16.0-16.1m, at 17.2m, at 17.5m, & at 17.7m; minor py in fractures; w/ white qtz-calcite bands
5B269 L	1177	2000	6	5B29* dol. 5B9	w/ qtz-py lenses; non-calc, dol. mod. carb., wkly sulf-bear phyll.
L	2100	3126	7	5D10	more highly calcareous below 24.7m; 5A0* dol. from 20.6-20.8m, 23.6-23.8m; 5B0 from 21.6-22.8m; 23.2-23.5m; 24.5-25.0m; and at 27.8m; minor py & gal in qtz-calcite bands; more ankeritic & tuffaceous at top; gouge at 23.7m; from 24.2-24.5m; 25.7-25.8m;
L	3126	3388	8	5B20* dol. 5A10	minor py blebs; 5B0 from 37.7-38.0m; numerous qtz-calcite lenses.
L	3388	4128	9	5D10	minor py cubes; 5B0 from 41.4-41.8m; few qtz-calcite veins.
L	4128	4445	10	5B10	minor w/ diss py; calcite blebs;
L	4445	4476	11	5C 10	mot mottled w/ elongate parallel blebs of mariposite & qtz; minor qtz-calcite bands
L	4476	4902	12	5B*	dol.
L	4902	5161	13	4A2	w/ 4A0 (on assay grounds) sph-rich qtz bands; 5% Pb2n; from 54.9-56.1 only. 1M core rec'd.
5D4* L	5161	5171	14	5D14*	dol. fault → 5C4* 5D4* fuchsitic >5%; upper contact indeterminate lower contact 115° (good)
L	5171	6104	15	5D10	5D4* ank. no fuchsite altered; light tan colour w/ qtz-calcite veins, from 59.1m to 60.4m, whiter colour & more sericitic.
L	6104	6410	16	5B62	w/ calcite blebs & qtz lenses
L	6410	6422	17	5D14*	light tan colour alternating w/ white colour; minor pystringers & qtz-calcite lenses. 3404
L	6422	6452	18	5B*	minor py; qtz-ankerite fracture fillings
L	6452	6599	19	5D14*	w/ thicker qtz-calcite veins from 65.3-65.8m; light tan colour
L	6599	6942	20	4D4	4D0 (on assay grounds) po layers from 65.9-66.0m; 5% Pb2n
L	6942	7022	21	4A2	4A24 (on assay grounds) minor thin sph bands w/ lesser gal; 5% Pb2n
L	7022	7113	22	5D14*	5D4* ank. no fuchsite minor py in qtz veins; calcite blebs & fracture fillings; light tan colour; gouge at 71.1m.
4A4 L	7113	7157	23	4A4	71.3-71.8 & 75.2-75.7 4D4; w/ 5% Pb2n in qtz-rose bands
L	7157	7922	24	5C 10	mot mottled → 5C1* dolomitic w/ dk. green chloritic lenses; talcy; 4D4 from 4C0

DDH 76-A160 (2 / 8)

Cyprus Anvil Mining Corp.
Lithologic Log

Logged By: PN
Checked

Code	From	To	Unit	Code	Description
1	10 14	16 20	22 23	25 27	
					77.7-77.9m; more massive and siliceous below 78.6m; minor manposite
4CO	L 7912	8111	215	4C0	green qtzite w/ 2% PbZn; minor sericite
5C4*	L 8111	8443	216	5C*4 (mot)	mottled w/ chlorite + calcite lenses; qtz vein at 82.0m, normal massive 5D0 for 3cm. on either side of vein; siliceous from 82.7-83.0m; minor qtz-calcite veins
4CO	L 8143	8778	217	4C0	2% red sph w/ lesser gal; approx 2% py
5C4*	L 8778	8886	218	5C*4 (mot)	ank. elongated chlorite stringers; mottled; w/ manposite flakes
4B4	L 8886	9103	219	4B4	w/ 1% PbZn in bands; py in fractures & disseminated in bands of sulphides (1% py)
5C4*	L 9103	9399	310	5C*4 D10	ankeritic local fuchsite mottled chl. & calcareous material; ankeritic staining; manposite flakes throughout; minor qtz-calcite veins; calcite fracture fillings; whiter colour from 91.7-91.9m; 4D4 from 92.6-92.8m.; porous from 92.8m-93.9m;
	L 9399	9443	311	4A4	5% PbZn bands; lesser py
5D4*	L 9443	9566	312	5D*4 D10	94.3-95.0 gouge (fault); ank. fuchsite 94.7-94.9 graphitic w/ siliceous pebbles; 95.1-95.3m. 5D0 & siliceous clasts consolidated in a gouge granular matrix; minor graphitic phyllite at 95.4m; highly porous
4A0	L 9566	10115	313	4A0	By(q); entire interval brecciated 2% PbZn; Same % of py (on assay ground); tan coloured porous 5D4* ank Fuch w/ manposite from 96.7-96.9m; and 97.3-97.7m; brecciated & graphitic 98.5-100.0m; siliceous clasts in siliceous sulph. matrix from 101.2-101.5m.
4EC	L 10115	10212	314	4EC	By(q) 102.1-101.8m py breccia w/ qtz & py pebbles in py matrix; 101.8-102.1m minor sph, gal & more siliceous
5C4*	L 10212	10381	315	5C*4 D10	fuchsite dolomitic brecciated from 102.1-102.7m w/ qtz, py, sph & calcite clasts in a manposite-rich matrix; 102.7-104.7m well laminated w/ ankeritic stain, qtz-calcite-py lenses & fracture fillings & manposite-rich; laminated calcite blebs from 104.7-105.2m.; 5C mgt mottled from 105.2-108.1m; chlorite blebs changing composition to manposite at 107.6m.
	L 10381	10888	316	4D10	2% PbZn; 2% py; minor sericite
	L 10888	11137	317	4A10	10% py, minor sph, gal; brecciated 111.3-113.7m.
5D4*	L 11137	11143	318	5D*4	ank. Fault; gouge w/ siliceous clasts; buff colour
	L 11143	11168	319	5A6	≈115.5 bit notch fuchs numerous qtz-calcite veins & fracture fillings; gouge w/ siliceous clasts from 115.6-115.8m, minor py
4L4	L 11168	11198	410	4L4	4L0 alternating w/ brecciated 4L with sulphides

DDH 76-A160 (2–8)

Cyprus Anvil Mining Corp.
Lithologic Log

Logged By: PN

Code	From	To	Unit	Code	Description
1	10–14	16–20	22 23	25–27	
					introduced forming the matrix; numerous qtz clasts present
					making the unit look similar to 4C.
5C4* L	119 8	120 6	4 1	5C4	→ 5C4* ankeritic, fuchsite tan coloured w/ mariposite
L	120 6	121 8	4 2	4D0	1% PbZn in thin bands; 121.0–121.3m. 4A4 w/ 2% PbZn;
					121.6–121.8 m. 5A0
L	121 8	123 4	4 3	4H1	4 (on assay grounds) [4D7] (5D4*) 5D0 w/ ankerite & mariposite from 121.9–122.1m.;
					122.1–122.5m. 4D0 w/ calcareous blebs; unit = 4C w/ py ⇌ po.
L	123 4	126 9	4 4	4D4	→ 4D0 (on assays) 4C0 w/ minor sph-gal from 123.4–124.0m.;
					5% PbZn; minor po
L	126 9	129 4	4 5	5C0	5C4* dol., little or no fuchsite mottled w/ qtz-calcite veins & laminated calcite blebs;
					irregular ankeritic staining
4C0 L	129 4	130 8	4 6	4C0	→ 4D0 (assay) 2% PbZn; thin inter bands of 5D0 from 129.9–130.3m
L	130 8	132 0	4 7	4A0	→ 4A4 (assay) 1% PbZn
L	132 0	134 1	4 8	4D4	→ 4D0 ± 7 (assay) 5% PbZn; 1% po from 132.9–133.1m; 133.1–133.2m
					5D0; w 4E & 4A4
L	134 1	136 1	4 9	5B62 5A0	fault; 5A0 from 134.1–136.1m.; light
					grey gouge
5B62 L	136 1	145 1	5 0	5B6	→ 5B62 negligible fizz; few qtz-ankerite veins; gougy zones
					from 136.5–136.7m; 138.4–138.7m (brecciated);
					142.4–142.6m; and 142.8–143.8m; gouge from 144.5–
					145.1m. (fault?)
		EOH			

DDH 76-A160 (2 / 8)

Cyprus Anvil Mining Corp.
Structural Log

Logged By: PW

Code	From	To	Feature	Sym	S_1 Dip Direct.	S_2 Dip Direct.	Description
1	10 14	16 20	22 24	26	28 32	34 38	
							0 – 6.7m O/B.
S		87	CS12			79 2310	
S		1135	CS12			716 2310	
S		1191	CS12			710 2310	
S		2334	F12	E			Z sym. 23.3 – 26.0m.
S		2553	CS12			811 2310	
S		2600	F12	S			S sym. 26.0 – 38.8m.
S		3117	CS12			714 2310	
S		3187	CSR			810 2310	
S		3188	F12	E			Z sym. 38.8 – 39.8m.
S		3A8	F12	S			S sym. 39.8 – 40.2m.
S		4102	F12	E			Z sym. 40.2 – 41.5m.
S		4115	F12	S			S sym. 41.5 – 43.6m.
S		4336	F12	E			Z sym. 43.6 – 49.2m.
S		4456	CS12			715 2310	
S		4492	CS12			8R 2310	
S		4912	F12	E			R region 49.2 – 56.1m. (massive sulphides)
S		5601	F12	R			S sym. 56.1 – 64.6m.
S		5746	CS12			619 2310	
S		6130	CS12			68 2310	
S		6146	F12	E			Z sym. 64.6 – 65.9m
S		6559	F12	Z			R region 65.9 – 75.7m.
S		7112	PS12			714 2310	
S		7153	PS12			617 2310	
S		7157	F12	R			S sym. 75.7 – 79.2m.
S		7168	CS12			618 2310	
S		7912	F12	S			R region 79.2 – 81.1m.
S		8111	F12	R			S sym. 81.1 – 84.3m.
S		8116	CS12			7R 2310	
S		8143	F12	S			R region 84.3 – 102.1m. (60% consists of massive sulphides)
S		8800	PS12			712 2310	
S		9711	PS12			515 2310	
S		10121	F12	R			S sym. 102.1 – 108.1 m.
S		10147	CS12			717 2310	
S		10881	F12	S			R region 108.1 – 136.1m. (60% consists

DDH 76-A-160 (2 / 8)

Cyprus Anvil Mining Corp.
Structural Log

Logged By: PN

Code	From	To	Feature	Sym	S_1 Dip Direct.	S_2 Dip Direct.	Description
1	10 14	16 20	22 24	26	28 32	34 38	
							of massive sulphides; Minor S at 131.6m.
S		111.54	PSI2			75 2310	
S		112.06	PSI2			74 2310	
S		112.74	PSI2			52 2310	
S		113.10	PSI2			74 2310	
S		113.61	FI2R				S sym. 136.1 - 145.1 m.
S		113.75	CSI2			60 2310	
S		114.40	CSI2			50 2310	
		EOH					

DDH 76A-160 (2 / 8) Cyprus Anvil Mining Corp Page _____ of _____

Logged by _____

ASSAY LOG (SAMPLER'S COPY) Date _____ Sampled by _____

CODE	FROM	TO	SAMPLE	INTR.	REC (m)	UNIT	DESCRIPTION
1	10 14	16 20	22 26	28 30	32 34	36 40	42
P	1492	1515	183312	23	22	4A21	
P	1515	1540	183313	25	15	4A21	
P	1540	1561	183314	21	10	4A21	
P	1659	1680	183315	21	20	4D41	
P	1680	1702	183316	22	22	4DA4	
P	1713	1735	183317	22	21	4A41	
P	1735	1757	183318	22	22	4A41	
P	1792	1811	183319	19	18	4C01	
P	1813	1860	183340	17	15	4C01	
P	1860	1878	183341	18	16	4C01	
P	1886	1903	183342	17	17	4B41	
P	1956	1975	183343	19	19	4A01	
P	1975	1995	183344	20	10	4A01	
P	1995	2015	183345	20	18	4A01	
P	2015	2021	183345	06	06	4E01	
P	2081	2100	183347	19	19	4A01	
P	2100	2120	183348	20	20	4A01	
P	2120	2137	183349	17	16	4A01	
P	2168	2183	183350	15	15	4L41	
P	2183	2198	183351	15	11	4L41	
P	2206	2218	183352	12	12	4D01	
P	2218	2234	183353	16	16	4H11	
P	2234	2252	183354	18	18	4D41	
P	2252	2269	183355	17	17	4D41	
P	2294	2308	183356	14	14	4C01	
P	2308	2320	183357	12	10	4A01	

DDH 76A-160 (2 / 8) Cyprus Anvil Mining Corp

Page _____ of _____

Logged by _____

ASSAY LOG (SAMPLER'S COPY) Date _____ Sampled by _____

CODE	FROM	TO	SAMPLE	INTR.	REC (m)	UNIT	DESCRIPTION
1	10 14	16 20	22 26	28 30	32 34	36 40	42
P	1320	1341	83518	21	16	4041	

DDH 76-A-160

Cyprus Anvil Mining Corp.

Geochemical Log (Sampler's Copy)

Logged By: PN

Sampled By:

Code	From	To	Sample No.	Description	LENGTH	REC.	UNIT
P	1419	1511	15513	K.A.	2.0	1.2	4AZ
P	1511	1512	15514	K.A.	1.5	0.57	4AZ
P	1512	1536	15515	K.A.	0.9	0.26	4AZ
P	1536	1549	15516	K.A.	1.3	0.86	4AZ
P	1549	1561	15517	K.A.	1.2	0.16	4AZ
P	1615	1675	15518	K.A.	1.6	1.6	4D4
P	1675	1691	15519	K.A.	1.6	1.6	4D4
P	1691	1702	15610	K.A.	1.1	1.0	4AZ
P	1711	1730	15611	K.A.	1.6	1.6	4AZ
P	1730	1746	15612	K.A.	1.6	1.6	4AZ
P	1746	1757	15613	K.A.	1.1	1.1	4AZ
P	1792	1812	15614	K.A.	2.0	1.5	4D4
P	1814	1878	15615	K.A.	3.5	2.7	4D4
P	1886	1903	15616	K.A.	1.7	1.3	4D4
P	1956	1985	15617	K.A.	2.9	1.8	4DO
P	1985	11000	15618	K.A.	1.5	0.33	4DO
P	11000	11015	15619	K.A.	1.5	1.2	4DO
P	11015	11021	15710	K.A.	0.6	0.55	4CO
P	11080	11113	15711	K.A.	3.3	3.3	4DO/4AO
P	11113	11137	15712	K.A.	2.4	2.4	4AO
P	11168	11198	15713	K.A.	3.0	2.8	4LC
P	11206	11221	15714	K.A.	1.5	1.4	4DO/4H1
P	11221	11236	15715	K.A.	1.5	1.4	4H1
P	11236	11252	15716	K.A.	1.6	1.55	4D4
P	11252	11269	15717	K.A.	1.7	1.65	4D4
P	12985	13000	15718	K.A.	0.5	0.5	4DO
P	13000	13200	15719	K.A.	2.0	1.7	4DO/4AO
P	13200	13209	15810	K.A.	0.9	0.5	4D4
P	13209	13241	15811	K.A.	1.2	0.55	4D4

DDH FAGA160 (2 Meters 8)

Cyprus Anvil Mining Corp.
Structural Log

Page _____ of _____

Date: _____ Logged By: PN/DSJ

Code	From	To	Feature	Sym	S_0 Dip Direct.	S_1 Dip Direct.	S_2 Dip Direct	Description
1	10 14	16 20	22 24	26	28 32	34 38	40 44	
F		161	G					gouge
F		172	IG					"
F		175	IG					"
F		177	IG					"
F		237	IG					"
F	242	245	G					"
F		258	G					"
F	549	561	P	O				0.1m recd.
F	561	571	G				69 [illegible]	gouge upper IND lower 11 S_2
F		711	IG					"
F	943	950	G					gouge
F	956	1027	X					bxia
F	1113	1137	X					"
F	1137	1143	G		75 [illegible]		75 [illegible]	gouge ≈ 11 S_2
F	1341	1361	GF					gouge
F		1366	G					"
F	1384	1387	GX					"
F		1425	G					"
F	1428	1438	G					"
F	1445	1451	GF					"

calc'n checked Jun 6/77 [illegible] calculated ✓

DIAMOND DRILL RECORD

LOGGED BY [illegible]

PROPERTY: GRUM JOINT VENTURE, Y.T.

D.D.H. No. 76-A160 PAGE 1 of 10

	CO-ORDS	GRID				
LATITUDE	11,021.188	9N	BEARING OF HOLE	-	STARTED	Sept. 18/76 N.S.
DEPARTURE	7,575.678	80W+	DIP OF HOLE	-90°	COMPLETED	Sept. 21/76 N.S.
ELEVATION	1312.305		DIP TESTS	NONE (out of developing fluid)	DEPTH Proposed:	143-152m
					Ultimate:	145.1m

CLAIM No.

DIRECTION AND DISTANCE FROM NE. CLAIM POST

use A-76 and A-77 at survey, for Dip & Brg

FOOTAGE FROM	FOOTAGE TO	DESCRIPTION	Rec. ~~Ft~~ M.	Sample No.	Footage From	Footage To	Sample Length	Assay Pb	Assay Zn	Assay Ag	Assay Au	Assay Cu	Assay x ~~Feet~~ Meter Pb	Assay x ~~Feet~~ Meter Zn	Assay x ~~Feet~~ Meter Ag
0	6.7	OVERBURDEN	2cm./6.7		0	6.7									
		1/2cm piece of hornfels (?).													
6.7	14.7	QUARTZ-GRAPHITE-CALCITE PHYLLITE (Gs) Gray-Black.													
		55-65% quartz, 2-5 calc, ± sericite within some intervals. 1mm-	0.3/1.2		6.7	7.9									
		3mm gray quartzose-calcite bands w/ black graphite (± sericite).	6.5/6.8			14.7									
		Fissile, core recovered as poker chips. No rusty oxidation.													
		C.A. F_2 = 60° @ 6.8m, 70-75° to 14.7m													
		F_1 = sub.vert. to F_2, fair to poor forms.													
14.7	17.7	QTZ-SER-CALC PHY (Sk) Pale Gray.													
		35-45% qtz, 15 calc. white qtzose-calc bands in	1.0/1.5		14.7	16.2									
		tightly foliated phy. 15.6-17.7m: shearing 4 places, possible fault @ 17.5-17.7m.	0.85/1.5			17.7									
		C.A. F_2 = 80° @ 14.8-16.5m, 70° @ 17.2m.													
17.7	23.8	QTZ-GRAPH (G) and QTZ-SER (S) PHY. Med. Gray + Pale Gray.													
		Mixed intervals of the two phyllites. Ser. Phy massive and	6./6.1		17.7	23.8									
		siliceous, tuffaceous-looking. Graphitic Phy show good													

LOGGED BY _____ D.D.H. NO. 76-A160 PAGE 2 of 10

Interval From	Interval To	DESCRIPTION	Recovery	Sample NO	Interval From	Interval To	Sample Length	Assay Pb	Assay Zn	Assay Ag	Assay Au	Assay Cu	Assay x Pb	Assay x Zn	Assay x Ag
		F1 forms.													
		Sericitic Phy @ 20-20.6', 20.8-21.4, 22.6-23, 23.5-23.6.													
		C.A. 55°@ 18', 70°@ 18.4-22.5, 75-80° to 23.8'													
23.8	32.6	QTZ-SER-CALC PHY (SK) Pale Gray.													
		55-60% q/3, 1-3 calc. Well foliated, fissile, occasional quartzose bands showing F1.	0.65/0.9		23.8	24.7									
			4.8/4.9			29.6									
		Shearing @ 23.8-24.6', crushed, brecciated + gouged. Shears also @ 25.7', several @ 30.3-31.1'.	1.8/3.0			32.6									
		C.A. F2 = 80°@ 24-30', 70-90-70 @ 30-32.6'.													
32.6	38.8	QTZ-GRAPH-SER± CALC PHY (GSK) Black to Med Gray.													
		More graphitic + quartzose on top of section, more sericitic towards 38'. Calc. varies from 2% @ 32.6-37.7', to nil thereafter. Shearing @ 32.6-35.4', very fissile.	0.9/1.5		32.6	34.1									
			0.85/1.6			35.7									
			2.8/3.1			38.8									
		C.A. F2 = 80-75°. F1 = 60-90° to F2 @ 35.5'.													
38.8	44.5	QTZ-SER PHY (S) Pale Gray + Med Gray.													
		Mixed intervals of Pale Gray + Med. Gray Ser Phy, both sericitic + approx. 45-50% q/3.	3/3.0		38.8	41.8									
			1.8/2.7			44.5									
		Med. Gray Phy. @ 41.4-41.9', 42.5-44.5'.													

LOGGED BY [signature] D.D.H. Nº 76-A160 PAGE 3 of 10

Interval From	Interval To	DESCRIPTION	Recovery	Sample Nº	Interval From	Interval To	Sample Length	Assay Pb	Assay Zn	Assay Ag	Assay Au	Assay Cu	Assay x Pb	Assay x Zn	Assay x Ag
		C.A. 80°													
		Shearing @ 39.8, 41.6, 42.8-43.2 m.													
44.5	47.0	QTZ-SER PHY (Sb) Bleached Buff.													
		70% qtz, siliceous & hard but parts readily.	2.1/2.5		44.5	47.0									
		NOTE: Rusty oxidation of fracture & F2 planes from 45.4-46.7 m.													
		C.A. 80-85°													
47.0	49.2	QTZ-SER PHY (S) Light Gray.													
		60% qtz, thinly banded phyllite, v. fissile. Minor rust to 47.9 m.	0.22/0.9		47.0	47.9									
		C.A. F2 = 80-85°. F1 sub-v. to F2, fair.	0.7/1.3			49.2									
49.2	56.1	QUARTZ-SULPHIDES-GRAPHITE (Pa)													
		70% qtz, av. 6 py, av. 4.5 PZ. F2 min'zn. py 6 pz 3.5	1.2	A 553B	49.2	51.2	2.0	1.43	3.18	25.37			2.86	6.36	50.74
		Siliceous + hard, highly fractured. Core recovery poor. 4 2	0.57	554B		52.7	1.5	1.00	2.70	23.31			1.50	4.05	34.97
		NOTE: rusty oxidation @ 53.6-53.9 m in fractures. 5 6	0.26	555B		53.6	0.9	1.53	2.65	28.46			1.38	2.39	25.61
		*NOTE: Sample #A55TB may contain caved material 10 7	0.86	556B		54.9	1.3	1.85	5.62	34.29			2.41	7.31	44.58
		C.A. F2 70-75°. F1 noted but core too broken to define. 4 2	* 0.16	557B		56.1	1.2	1.13	2.90	17.14			1.36	3.48	20.57
56.1	57.2	FAULT		WT. Av.	49.2	56.1	6.9	1.38	3.42	25.58			9.51	23.59	176.47
		Gouge + gougey breccia. 5% mariposite @ 56.1-	0.83/1.1		56.1	57.2									

LOGGED BY [signature] D.D.H. Nº 76-A160 PAGE 4 of 10

Interval From	Interval To	DESCRIPTION	Recovery	Sample Nº	Interval From	Interval To	Sample Length	Assay Pb	Assay Zn	Assay Ag	Assay Au	Assay Cu	Assay x Pb	Assay x Zn	Assay x Ag
		56.5m.													
57.2	62.2	QTZ-SER ± CALC ± TALC (SKT) Grayish-White													
		Massive, siliceous & hard. Practically unfoliated	5/5.0		57.2	62.2									
		rock. 60.4-61m: gray sericitic phy.													
		C.A. 75-90°. F1 noted @ 58.1-58.8m (noses?)													
62.2	65.0	QTZ-SER PHY (S) Med. Gray.													
		50-60% qtz, thinly laminated, mod. fractured w/ qtz-	2.5/2.8		62.2	65.0									
		ankerite filled. Possible shear contact @ 65m-65.2m.													
		C.A. F2 = 70-80°, 55° @ contact (646-65m).													
		F1 = 60° to F2 @ 64m, not evident elsewhere.													
65.0	65.9	QTZ-SER PHY (Sb) Bleached Buff.													
		Sericitic, slightly talcy; 50% qtz veins.	0.86/0.9		65.0	65.9									
		C.A. F2 = 85° @ 65.2m, 45° @ 65.8m.													
65.9	70.2	QTZ-SULPHIDES-SER ± GRAPH (PSG F)	Py PZ PEG												
		75-80% qtz, siliceous & hard. 5-10% ser, 1 graph @ 69.2-70.2m.	5 5.5 1.6	A 558B	65.9	67.5	1.6	2.50	6.15	41.49			4.00	9.84	66.38
		A1. 5 py, 5.5 PZ. Upper contact // F2 = 45°, lower // F2 = 75°	5 5.5 1.6	559B		69.1	1.6	3.23	4.85	48.34			5.17	7.76	77.34
		C.A. F2 = 70° @ 66m, 80° @ 66.4-69.8, 75° @ 70m.	5 4.5 1.0	560B		70.2	1.1	2.90	6.00	51.43			3.19	6.60	56.57
		F1 = 70° @ 68.3, 90° @ 69.9; F1 noses + closures @ 66.4 + 70m		WT. Av.	65.9	70.2	4.3	2.87	5.63	46.58			12.36	24.20	200.29

LOGGED BY _____ D.D.H. NO 76-A160 PAGE 5 of 10

Interval From	Interval To	DESCRIPTION	Py	Pz	Recovery	Sample No	Interval From	Interval To	Sample Length	Assay Pb	Assay Zn	Assay Ag	Assay Au	Assay Cu	Assay x Pb	Assay x Zn	Assay x Ag
70.2	71.4	Qtz-Ser Phy (Sb) Bleached, Off-White.															
		Massive, tightly packed sericite, slightly talcy.			1.2/1.2		70.2	71.4									
		Sheared w/ gouge @ 71-71.1'. Odd spot py.															
		C.A. F_2 = 90°. F_1 = 30° to F_2 @ 70.9'.															
71.4	75.7	Qtz-Sulphs-Graph (Pa Pb)															
		70% qtz, av. 15 py, 6.5 Pz. Very siliceous, parts	25	6	1.6	A 561 B	71.4	73.0	1.6	2.70	4.88	51.43			4.32	12.61	82.29
		silicified-looking. Pb Zn in bands, also dissem in	10	8	1.6	562 B		74.6	1.6	4.76	6.32	72.69			7.62	10.11	116.30
		siliceous mass. Both F_2 & F_1 mineralization.	6	5	1.1	563 B		75.7	1.1	1.88	3.40	28.46	✓				
		C.A. F_2 = 70-75°. F_1 = 45-90° to F_2. Contacts // F_2.															
						WT. AV.	71.4	74.6	3.2	3.73	7.10	62.06			11.94	22.72	198.59
						WT. AV.	65.9	74.6	8.7	2.79	5.39	45.8			24.30	46.92	398.88
75.7	79.2	Talc-Chlorite-Calc Green on White.															
		Massive, soft, dull green leases on white (mottle).			2.6/2.6		75.7	78.3									
		25% chlorite, 1-2 calc. 10cm Qtz-Sulphs @ 77.8'.			0.55/0.9			79.2									
		C.A. F_2 = 70 to 75°. F_1 = 40° or less to F_2, not distinct.															
79.2	81.2	Qtz-Sulph-Ser (Ps) Grayish-White															
		85-95% qtz, sparse threads, blebs, bands of sulphs,	2	15	1.5	A 564 B	79.2	81.2	2.0	1.13	1.10	19.20	✓				
		in silicified ground mass. Av. 2py, 1.3 Pz. 2% Ser.															
		C.A. F_2 70-60-85°. F_1 = subor. to F_2.															

LOGGED BY D. Chow D.D.H. NO 76-A160 PAGE 6 of 10

Interval From	Interval To	DESCRIPTION	Recovery	Sample NO	Interval From	Interval To	Sample Length	Assay Pb	Assay Zn	Assay Ag	Assay Au	Assay Cu	Assay x Pb	Assay x Zn	Assay x Ag
81.2	84.3	TALC - CHL - CALC. (TCK)													
		As 75.7 - 79.2'. C.A. F_2 = 85 - 70 - 85 - 70°	2.8/3.1		81.2	84.3									
84.3	87.8	QTZ - SULPHS - SER (PSF)													
		As 79.2 - 81.2'. F_2 = 75-85°. F_1 = 75° to F_2 | 4 | 3	2.7	A 565B	84.3	87.8	3.5	1.10	1.10	17.14	✓				
87.8	88.6	TALC CHL - CALC (TCK)													
		As 81.2 - 84.3'. C.A. = F_2 70°. Flakes mariposite @ 88.5.	0.73/0.8		87.8	88.6									
88.6	90.3	QTZ - SULPHS - SER (PSFP)													
		As 84.3 - 87.8'. F_2 = 85-90°. F_1 = 45° to F_2, local. | 1 | 1	1.3	A 566B	88.6	90.3	1.7	0.80	1.03	15.09	✓				
		Contacts // F_2.													
90.3	95.6	TALC - CHL - CALC - MARIPOSITE (TCK) & QTZ-SULPHS (P)													
		As 87.8 - 88.6' to 91.9' [illegible] 3-5% mariposite from	2.2/2.4		90.3	92.7									
		91.9 - 95' but no chlorite.	0.22/0.4			93.1		1.5	PB, cst						
		92.7 - 93.1': Qtz-Sulph-Ser, 2 py, 1-5 PZ.	0.56/0.8			93.9									
		93.9 - 94.4: " - " - Graph, 3 py, 6 PZ.	0.36/0.5			94.4		6	PB, cst.						
		94.6 - 94.9: Fault Breccia in Qtz-Graph.	0.9/1.2			95.6									
95.6	102.1	QTZ - SULPHS - SER (PS) & QTZ - TALC - SER - MARIPOSITE. (TC)													
		No fault noted but rocks show intense stress, and brecciated													

LOGGED BY [signature] D.D.H. Nº 76-A16 PAGE 7 of 10

Interval From	Interval To	DESCRIPTION	Py	PZ	Recovery	Sample Nº	Interval From	Interval To	Sample Length	Assay Pb	Assay Zn	Assay Ag	Assay Au	Assay Cu	Assay x Pb	Assay x Zn	Assay x Ag	
		from 98.5 – 102.1m (QXQD) A, re-cemented in part (100 – 102.1m),	3	4	1.8	A 567B	95.6	98.5	2.9	1.72	3.83	25.37			4.99	11.11	73.57	
		96.8 – 97m and 97.3 – 98m : Qtz-Talc-Ser-Mariposite	1	0.5	0.33	568B		100.0	1.5	0.60	1.50	7.20			0.90	2.25	10.80	P
		C.A. 60° @ 96m, 30° @ 96.5, 60° @ 96.9, 50° @ 98.4,	8	6	1.2	569B		101.5	1.5	1.80	4.18	29.14			2.70	6.27	43.71	
		70° @ 100.4, 40° @ 101.7m.	40	8	0.55	570B		102.1	0.6	2.50	6.51	35.31	✓		1.50	3.91	21.19	P
102.1	108.0	TALC-QUARTZ-MARIPOSITE (TQ) and QTZ-SER-TALC-CHL (STC)				~~WT. AV.~~ ~~WT. AV.~~	95.6 ~~95.6~~	102.1 ~~101.5~~	6.5 ~~5.9~~	1.55 ~~1.46~~	3.62 ~~3.33~~	23 ~~21.71~~			10.09 ~~8.59~~	23.54 ~~19.63~~	149.27 ~~128.08~~	P ✓
		102.1 – 105.1m and 107.6 – 108.0m : (TQ), Massive, soft,			5.9/5.9		102.1	108.0										
		slightly porous. 5% mariposite.																
		105.1 – 107.6m : (STC), Massive, firm, 15% chl (mottled).																
		C.A. 25° @ 102.4 – 103.7m, 75 – 85° @ 104.6 – 107.6,																
		70 – 55° @ 107.7 – 107.9m. F2 nose (?) @ 104.3m.																
108.0	113.7	QTZ-SULPHS-GRAPH/SER (PG, PS)																
		108.0 – 108.8m : (PS), 85-90% qtz, 2py, 3.5 PZ.	14	4	3.3	A 571B	108.0	111.3	3.3	1.85	2.95	28.46	✓					
		– 111.3 : (PG), 80% qtz, 15py, 4 PZ. F2+F1 mingn.	15	0.3	2.4	572B		113.7	2.4	0.55	1.43	15.09	✓					
		– 113.7 : (PG), 15py, 0.3 PZ, 80% qt, brecciated,																
		also sulph + qtz breccia. Well-healed																
		+ firm.																
		C.A. F2 = 70-75°. F1 = 45-90° to F2, good.																
113.7	114.3	FAULT																
		Gouge & breccia, mainly buff color. No sulphs.			0.55/0.6		113.7	114.3										

LOGGED BY F. Chow D.D.H. Nº 76 - A160 PAGE 8 of 10

Interval From	Interval To	DESCRIPTION	Recovery	Sample Nº	Interval From	Interval To	Sample Length	Assay Pb	Assay Zn	Assay Ag	Assay Au	Assay Cu	Assay x Pb	Assay x Zn	Assay x Ag
114.3	116.8	QTZ-GRAPH PHY (G)													
		Rock is contorted, 60% brecciated & healed, many	2.5/2.5		114.3	116.8									
		tight shears or slips. One shear @ 115.6 - 115.8' show													
		gouge & brecciation. 5% qtz intrusion.													
116.8	119.8	QTZ-SER-SULPHS (SbP) Bleached Buff. Py Pz													
		5% qtz, 0-40 py (av. 5%) occuring in widely 5 0.3	2.8	A 573B	116.8	119.8	3.0	0.55	0.48	8.23	✓				
		separated bands & splashes, 0.3 Pz occuring w/ py also													
		w/ sections of qtz-sulphs.													
		C.A. 1/2 = 10° @ 117', 0° @ 117.2, 20° @ 117.7, 30° @ 118.2													
		70° @ 118.9.													
		F1 = 90° to F2 @ 117.4, 117.8'.													
119.8	120.6	QTZ-SER-MARIPOSITE (Sb) Bleached Buff.													
		Buff w/ foliations of mariposite (8%). F2 = 70-80°.	0.8/0.8		119.8	120.6									
120.6	126.9	QTZ-SULPHS-SER (Ps) Buff white Py Pz													
		Varied sulph mineralization. Mainly Fe mizn. 2 2	1.4	A 574B	120.6	122.1	1.5	1.83	3.75	21.26	✓				
		120.6 - 120.8': white ser phy, 3 py, 2.5 Pz 11 3	1.4	575B		123.6	1.5	3.10	6.22	53.49			4.65	9.33	80.24
		- 121.2 : Gray Graph-Phy, 3 py 4 Pz. 8 6	1.55	576B		125.2	1.6	3.38	4.80	53.49			5.41	7.68	85.58
		- 121.55 : White Ser Phy, 2 py, 4 Pz 8 5	1.65	577B		126.9	1.7	3.30	5.83	53.49			5.61	9.91	90.93
		- 121.7 : Black Graph. Phy. 1 py, no Pz.		WT.AV.	122.1	126.9	4.8	3.26	5.61	53.49			15.67	26.92	256.75

LOGGED BY [signature] D.D.H. Nº 76-A160 PAGE 9 of 10

Interval From	Interval To	DESCRIPTION	Recovery	Sample Nº	Interval From	Interval To	Sample Length	Assay Pb	Assay Zn	Assay Ag	Assay Au	Assay Cu	Assay x Pb	Assay x Zn	Assay x Ag
		- 122.1 : Buff Ser Phy, 2py, 0.3 PZ.													
		- 122.9 : Qtz-Sulph-Ser, 10py, 1po, 3PZ.													
		- 123.4 : Qtz-Sulph, 4py, 10po, 3PZ.													
		-123.6 : Mass. Sulph, 80py, 4PZ.													
		-126.9 : White, Qtz-Sulph-Ser, 8py, 5.5PZ, spot Po.													
		C.A. F2 = 70°. Upper + lower contacts // F2.													
		F1 = 90° to F2 @ 121m, F1 noses @ 124-125.1m,													
		90° to F2 @ 125.8, 30° @ 126.3-126.5m.													
126.9	129.5	QTZ-SER-CHL-CALC PHY (SCK) Dull Green	2.6/2.6		126.9	129.5									
		45% qtz, 25 chl, 1-2 calc. Massive, soft.													
		1-5 mm bands quartzose py, Pb, Zn @ 128.3-129m.													
		C.A. 60-65° F2.													
129.5	134.1	QTZ-SULPHS-SER-GRAPH (PGS)	Py Po / PZ												
		129.5-130.1m : Buff-White Ser interbanded w/Qtz-Sulphs (8.5PZ)	1 / 1 / 0.5	A 578B	129.5	130.0	0.5	1.18	2.65	17.14	✓				
		- 132.0 : Gray Qtz-Sulph-Graph, 3py, 5PZ.	3 / 5 / 1.7	579B		132.0	2.0	2.10	4.86	32.23			4.20	9.72	64.46
		-134.1 : Mass. Sulph bands w/Qtz-Sulphs, 20Py, 7PZ, 1Po	8 / 6 / 0.5	580B		132.9	0.9	2.75	5.35	44.23			2.48	4.82	39.81
		C.A. F2 = 65° @ 129.5-132m.	25 / 8 / 0.55	581B		134.1	1.2	3.13	5.30	43.20			3.76	6.36	51.84
		F1 : 40-90° to F2 @ 130-132m.													
				Wt. Av.	130.0	134.1	4.1	2.57	5.10	38.08			10.44	20.90	156.11
				//	132.0	134.1	2.1	2.97	5.32	43.64			6.24	11.18	91.65

LOGGED BY J. Ebbs D.D.H. Nº 76-A160 PAGE 10 of 10

Interval From	Interval To	DESCRIPTION	Recovery	Sample Nº	Interval From	Interval To	Sample Length	Assay Pb	Assay Zn	Assay Ag	Assay Au	Assay Cu	Assay x Pb	Assay x Zn	Assay x Ag
134.1	136.2	FAULT in Qtz-Ser Phy (S)													
		Dark gray gouge & brecciated phyllite.	0.9/2.1		134.1	136.2									
136.2	144.7	QTZ-SER PHY (S), also SHEAR ZONE. Med. Gray.													
		50% qtz. Rocks show major shearing @ one	1.3/1.3		136.2	137.5									
		meter or less intervals. Major shears @:	3.2/3.6			141.1									
		136.5 – 136.7' = crushed & sheared,	0.54/1.5			142.6									
		138.4 – 138.7 ' " & brecciated,	0.8/1.6			144.2									
		142.8 – 143.7 : " , sheared, partly gouged.													
		144.2 – 144.7 : brecciated & squeezed.													
		C.A. F_3 = 60° @ 136.7 – 139.1', 75° @ 141.2, 70° @ 144'.													
		F_1 = 90° to F_2 @ 136.8 – 139.2'													
144.7	145.1	FAULT in Qtz-Ser Phy (S)													
		Phyllites sheared, crushed & gouged.	0.9/0.9		144.2	145.1									
	145.1	END OF HOLE.													
		REMARKS:													
		① Cemented with 14 bags cement (poured down casing).													
		② Lost re-circulation @ 51.8', no shear nor fault noted, likely water loss through fractures.													

DDH: FAGA160 -- 42 DEGREE PROFILE

(VIEW AZIMUTH = 312 DEGREES)

ELEV: 1302 592263E ; 905227N

PLUNGE ANGLE IS 11.0 TREND ANGLE IS 312.0

CORRECTED COLLAR POSITION: X = 644.2 Z = 1302.5

SECTION NAME: 80W

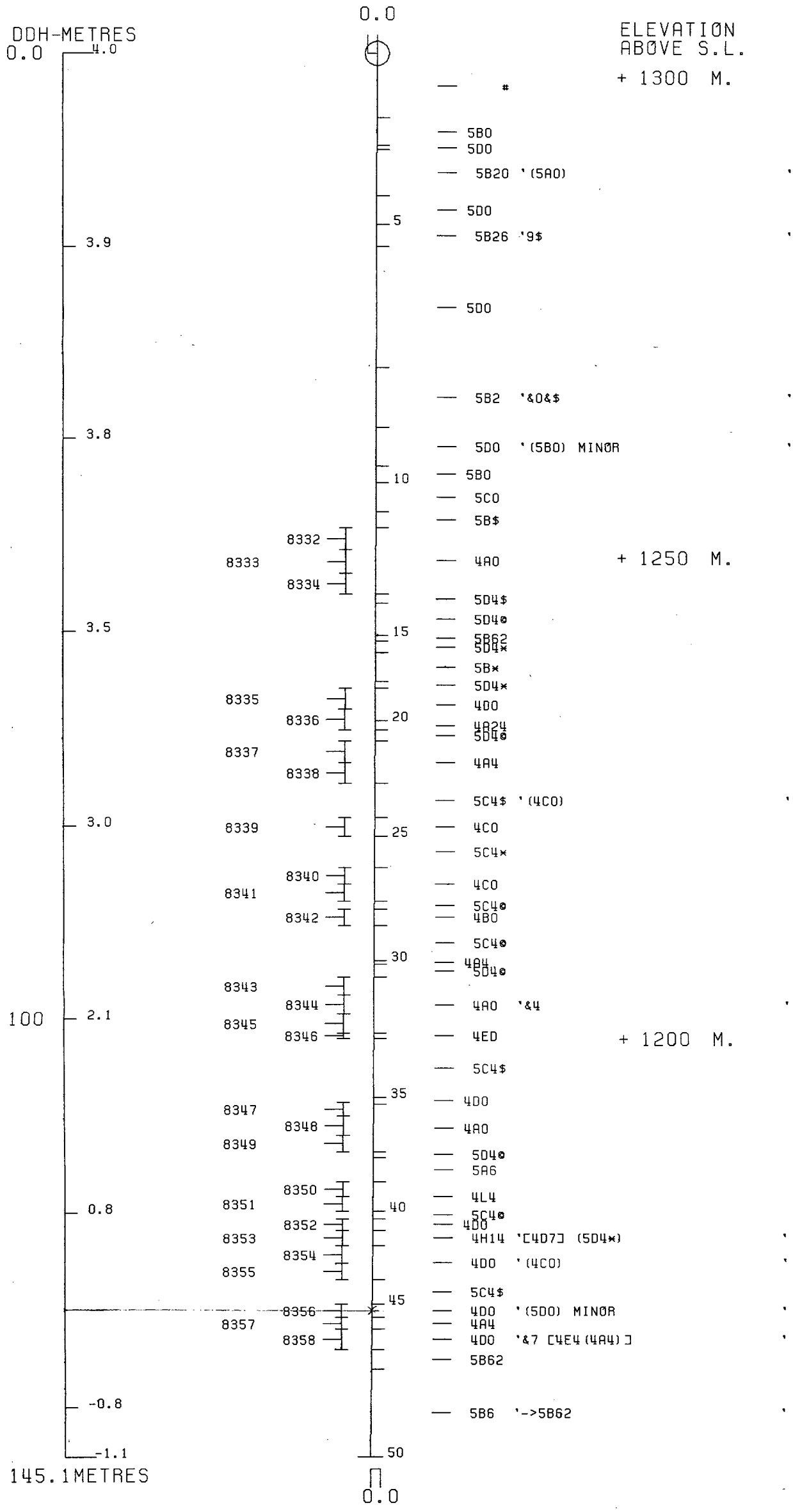

CYPRUS ANVIL MINING CORPORATION
PROGRAM DH162 29 JAN 1985 1:12 PM

DDH: FAGA160 -- 42 DEGREE PROFILE

(VIEW AZIMUTH = 312 DEGREES)

ELEV:1302 592263E ; 905227N

PLUNGE ANGLE IS 11.0 TREND ANGLE IS 312.0

CORRECTED COLLAR POSITION: X = 644.2 Z = 1302.5

SECTION NAME: 80W

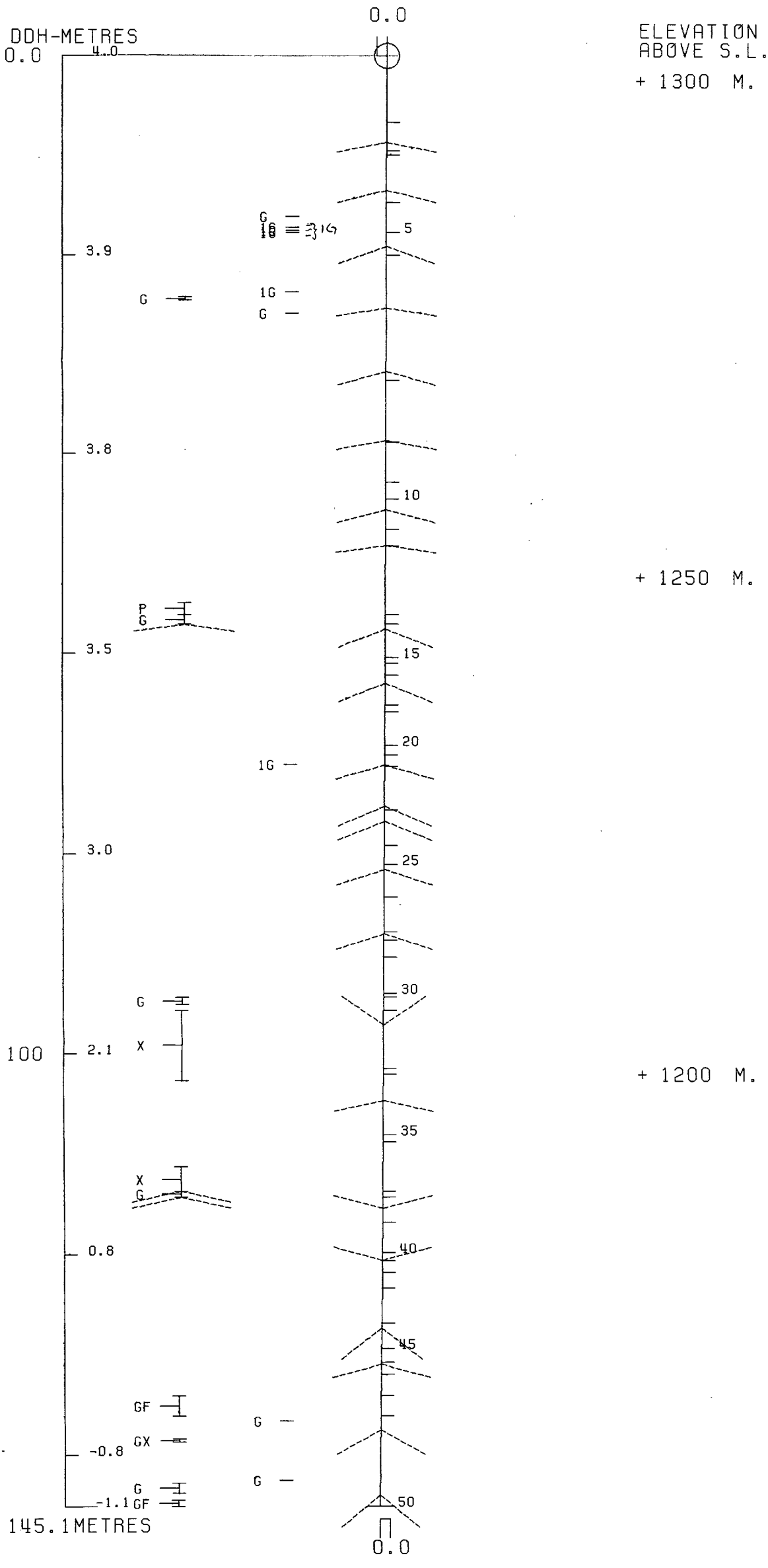

CYPRUS ANVIL MINING CORPORATION
PROGRAM DH161 30 JAN 1985 10:09 AM

76 A163

DRILL HOLE : FAGA163
NORTHING : 905,299.6
EASTING : 592,327.3
ELEVATION : 1,302.1
TOTAL DEPTH : 119.5
SECTION : W 80
R.F.E. : S2
RFE DIRECTION: 230
PLUNGE ANGLE : 11
PLUNGE DIRECT: 312
DHD CALC: 0
SS CALC: 0

DETAIL RECORD COUNTS:

NOS ORE-SAMPLES: 31
NOS DOWN-H-SURVEYS: 2
NOS DOWN-H-LITHOLOGY: 36
NOS DOWN-H-STRUCTURE: 29
NOS DOWN-H-FAULTS: 9
NOS DOWN-H-SPLINES: 2
NOS COMPOSITES: 0

DDH: FAGA163 UTM-N: 905,299.6 UTM-E: 592,327.3 UTM-ELEV: 1,302.1 TOTAL DEPTH: 119.5 SECTION: W 80
RFE: S2 RFE DIR: 230 PLUNGE ANGLES: 11 312 DHD CALC: C SS CALC: 0

DEPTHS FROM	DEPTHS TO	SAMPLE NO.	INT.	REC.	ROCK UNIT	S.G. PULP	CU %	PB %	ZN %	AG(AA) G/MT	AG(FA) G/MT	AU(FA) G/MT	PO %	PY %	TOT FE	BAO %	HG %	MN %	AS %	BA %	S.G. W.R.
26.0	28.0	08474	2.0	2.0	4A12	3.09	.05	2.70	2.30	39.00		.41		6	6						
28.0	29.9	08475	1.9	1.7	4A14	3.17	.02	3.60	4.50	40.00		.34	1	7	8						
29.9	34.6	08476	4.7	1.6	4B4	3.01	.03	1.67	3.50	34.00		.69	1	4	5						
34.6	36.1	08477	1.5	1.5	4B4	2.89	.02	1.47	4.90	37.00		.07	1		1						
36.1	38.0	08478	1.9	1.9	4A14	2.96	.03	1.68	3.60	36.00		.27	1	3	4						
38.0	39.8	08479	1.8	1.8	4A4	2.98	.03	1.91	4.40	36.00		.27	2	2	4						
39.8	41.5	08480	1.7	1.6	4A4	2.93	.02	1.92	3.60	31.00		.34	1	2	3						
41.5	43.0	08481	1.5	1.5	4A4	3.06	.04	3.70	6.80	45.00		.82	3	3	6						
43.0	45.4	90265	2.4	.0	4A0			1.20	2.38	16.10											
50.4	53.9	08482	3.5	3.0	4A14	2.96	.04	3.00	5.70	47.00	54.00	.69	2	2	4						
53.9	55.6	08483	1.7	1.6	4A4	2.96	.04	1.69	3.60	24.00		1.30	1	4	6						
66.4	68.4	08484	2.0	1.7	4A41	3.16	.02	3.30	7.00	55.00		1.03	2	6	8						
68.4	70.2	08485	1.8	1.8	4A4	3.16	.02	1.86	4.90	33.00		.89	1	6	8						
70.2	71.8	08486	1.6	1.6	4A0	3.08	.02	.83	1.81	20.00		.75	1	5	7						
71.8	73.7	08487	1.9	1.9	4E4	3.82	.08	7.80	1.54	139.00		1.65	4	11	15						
73.7	75.3	08488	1.6	1.6	5D0	3.21	.02	1.29	3.70	31.00		.41	4	6	11						
75.3	76.8	08489	1.5	1.5	4E10	3.53	.02	1.21	3.30	27.00		.75	2	17	19						
76.8	79.0	08490	2.2	2.2	4D4	3.42	.12	3.70	9.80	68.00		1.10	2	10	12						
85.5	86.2	08303	.7	.6	4A4		.02	3.30	8.20	70.00											
91.4	93.3	08491	1.9	1.9	4A0	3.15	.02	1.08	2.90	21.00		.69	1	7	8						
93.3	95.4	08492	2.1	2.1	4A34	3.20	.05	1.74	3.30	34.00	35.00	.82	1	9	11						
95.4	96.6	08493	1.2	1.2	4A0	3.08	.04	.92	1.25	18.00		1.17	1	7	8						
96.6	98.3	08494	1.7	1.7	4A0	3.09	.04	.91	1.40	19.00		.89	1	6	7						
98.3	99.8	08495	1.5	1.5	5D4	3.23	.06	3.20	4.70	53.00		1.03	4	4	8						
99.8	102.6	08496	2.8	2.8	4A0	3.09	.03	.52	.97	14.00		.96	1	6	7						
102.6	103.6	08497	1.0	1.0	5D4	3.06	.02	.35	.71	9.00		.27	5	1	6						
103.6	104.2	08498	.6	.5	4D4	3.92	.09	8.60	20.40	148.00		2.54	4	10	15						
104.2	107.3	08499	3.1	1.6	4A4	3.01	.05	1.44	4.20	28.00		2.33	2	2	5						
108.5	109.4	08500	.9	.8	4A14	3.37	.07	2.60	4.70	41.00		1.03	1	12	14						
109.4	110.3	08301	.9	.8	4E14	4.40	.12	5.60	8.70	130.00		1.44	1	28	29						
110.3	112.4	08302	2.1	2.0	4A4	3.27	.03	3.00	4.60	65.00	58.00	1.78	1	9	10						
WEIGHTED AVERAGE																					
26.0	45.4		19.4	13.6		2.64	.02	2.09	3.80	34.08		.39	1	3	4						
50.4	55.6		3.2	4.6		2.96	.04	2.57	5.01	39.48	36.34	.88	2	2	4						
66.4	79.0		12.6	12.3		3.34	.04	3.02	4.84	55.96		.96	2	3	11						
85.5	86.2		.7	.6			.02	3.30	8.20	70.00											
91.4	107.3		15.9	14.3		3.13	.04	1.54	3.27	29.46	4.62	1.20	2	5	8						
108.5	112.4		3.9	3.6		3.55	.06	3.50	5.56	74.46	31.23	1.52	1	14	15						

DDH: FAGA163 UTM-N: 905,299.6 UTM-E: 592,327.3 UTM-ELEV: 1,302.1 TOTAL DEPTH: 119.5 SECTION: W 80
RFE: S2 RFE DIR: 230 PLUNGE ANGLES: 11 312 DHD CALC: 0 SS CALC: 0

DEPTH	ZENITH	AZIMUTH
0.000	180.000	0.000
82.900	174.200	104.000

DDH: FAGA163 UTM-N: 905,299.6 UTM-E: 592,327.3 UTM-ELEV: 1,302.1 TOTAL DEPTH: 119.5 SECTION: W 80
RFE: S2 RFE DIR: 230 PLUNGE ANGLES: 11 312 DHD CALC: C SS CALC: 0

DEPTH	UNIT	CODE	DESC	RECOVERY	IND
9.1	0001	#			
12.5	0002	5D$		0.0	0
13.2	0003	5B2$		0.0	0
14.3	0004	5D4$		0.0	0
23.5	0005	5C4*		0.0	0
24.4	0006	4L0		0.0	0
26.0	0007	5D4*	(10Q0)	0.0	0
29.9	0008	4A42	[4A12(3G2)]	0.0	0
36.1	0009	4B4		0.0	0
43.0	0010	4A14	PHYLLITIC (3G2)	0.0	0
50.4	0011	5D4*	(4A0)	0.0	0
55.6	0012	4A14	PHYLLITIC	0.0	0
64.1	0013	3G9		0.0	0
66.4	0014	5A19	(4A0)	0.0	0
71.6	0015	4A41	(3G2) (4E4) MINOR AT TOP	0.0	0
73.7	0016	4E4	(4D45)(5D4&a)	0.0	0
75.3	0017	5D0	(4D4)(4E0) BOTH MINOR	0.0	0
76.8	0018	4E10	(4E4)(5D0)(4A0)	0.0	0
79.0	0019	4D4	(4E4)(5D0)(4E1)	0.0	0
85.5	0020	4L6		0.0	0
85.9	0021	4E41		0.0	0
86.2	0022	4A12		0.0	0
90.2	0023	5A19	->4A0	0.0	0
91.4	0024	4L12	[4A->4L] [4C5]	0.0	0
98.3	0025	4A0	(4A3)(4D4)	0.0	0
99.8	0026	5D4	[5F4?] (4D4) 80:20	0.0	0
102.6	0027	4A0		0.0	0
103.6	0028	5D4	(4D4)	0.0	0
104.2	0029	4D4	&5	0.0	0
107.3	0030	4A4	(5D4) 50:50	0.0	0
108.5	0031	5B6	(5D4)	0.0	0
109.4	0032	4A14		0.0	0
110.3	0033	4E4	(4E14)	0.0	0
112.4	0034	4A0	&4 (3G2)	0.0	0
117.0	0035	5B6		0.0	0
119.5	0036	5D4*		0.0	0

DOWN-HOLE STRUCTURE (DHO2O)

DDH: FAGA163 UTM-N: 905,299.6 UTM-E: 592,327.3 UTM-ELEV: 1,302.1 TOTAL DEPTH: 119.5 SECTION: W 80
RFE: S2 RFE DIR: 230 PLUNGE ANGLES: 11 312 DHD CALC: 0 SS CALC: 0

DDH	F DEPTH	T DEPTH	FEAT	SYMTRY	S0 ANGLE	S0 DIRECT	S1 ANGLE	S1 DIRECT	S2 ANGLE	S2 DIRECT	RFE CDE	DHDC	SDC	PROCESS
FAGA163	0.0	13.8	CS2		0	0	0	0	76	230	0	1	0	0
FAGA163	0.0	21.5	CS2		0	0	0	0	57	230	0	1	0	0
FAGA163	0.0	27.2	CS2		0	0	0	0	60	230	0	1	0	0
FAGA163	0.0	35.1	CS2		0	0	0	0	57	230	0	1	0	0
FAGA163	0.0	40.9	CS2		0	0	0	0	54	230	0	1	0	0
FAGA163	0.0	47.6	CS2		0	0	0	0	73	230	0	1	0	0
FAGA163	0.0	52.4	CS2		0	0	0	0	69	230	0	1	0	0
FAGA163	0.0	56.8	CS2		0	0	0	0	73	230	0	1	0	0
FAGA163	0.0	62.4	CS2		0	0	0	0	66	230	0	1	0	0
FAGA163	0.0	68.6	CS2		0	0	0	0	73	230	0	1	0	0
FAGA163	9.1	71.8	CS2	S	0	0	0	0	0	0	0	1	0	0
FAGA163	0.0	75.7	PS2		0	0	0	0	67	230	0	1	0	0
FAGA163	71.8	79.0	PS2	P	0	0	0	0	0	0	0	1	0	0
FAGA163	0.0	81.0	CS2		0	0	0	0	81	230	0	1	0	0
FAGA163	79.0	83.4	CS2	S	0	0	0	0	0	0	0	1	0	0
FAGA163	0.0	86.8	CS2		0	0	0	0	59	230	0	1	0	0
FAGA163	83.4	87.6	CS2	Z	0	0	0	0	0	0	0	1	0	0
FAGA163	0.0	91.5	CS2		0	0	0	0	73	230	0	1	0	0
FAGA163	0.0	97.0	CS2		0	0	0	0	58	230	0	1	0	0
FAGA163	97.6	99.7	CS2	S	0	0	0	0	0	0	0	1	0	0
FAGA163	0.0	103.4	CS2		0	0	0	0	33	230	0	1	0	0
FAGA163	99.7	103.6	CS2	M	0	0	0	0	0	0	0	1	0	0
FAGA163	103.6	104.2	PS2	P	0	0	0	0	0	0	0	1	0	0
FAGA163	0.0	107.4	CS2		0	0	0	0	56	230	0	1	0	0
FAGA163	104.2	109.4	CS2	S	0	0	0	0	0	0	0	1	0	0
FAGA163	109.4	110.3	PS2	P	0	0	0	0	0	0	0	1	0	0
FAGA163	0.0	111.6	CS2		0	0	0	0	43	230	0	1	0	0
FAGA163	0.0	116.4	CS2		0	0	0	0	75	230	0	1	0	0
FAGA163	110.3	119.5	CS2	S	0	0	0	0	0	0	0	1	0	1

DDH: FAGA163 UTM-N: 905,299.6 UTM-E: 592,327.3 UTM-ELEV: 1,302.1 TOTAL DEPTH: 119.5 SECTION: W 80
RFE: S2 RFE DIR: 230 PLUNGE ANGLES: 11 312 DHD CALC: 0 SS CALC: 0

DDH	F DEPTH	T DEPTH	FEAT REC CD	PARLL	UPPER PLANE		INTERNAL PLANE		LOWER PLANE		DHD
FAGA163	14.4	17.4	NF?		0	0	0	0	0	0	1
FAGA163	24.7	25.0	B-		0	0	0	0	0	0	1
FAGA163	31.1	32.6	NM?		0	0	0	0	0	0	1
FAGA163	0.0	50.4	X		0	0	0	0	0	0	1
FAGA163	61.6	62.0	G		0	0	0	0	0	0	1
FAGA163	63.2	63.4	G		0	0	0	0	0	0	1
FAGA163	63.4	64.0	N		0	0	0	0	0	0	1
FAGA163	85.9	86.2	RC?		0	0	0	0	0	0	1
FAGA163	112.4	115.2	RF		0	0	0	0	0	0	1

CYPRUS ANVIL MINING CORPORATION

DIAMOND DRILL CORE LOG

Hole Number: 76-A163

Fabric Orientation Diagram:

Project: GRUM

Location: VANGORDA PLATEAU

Claim: _____

UTM
Terr. Plane Co-ords.: 6,905,299.63 N

592,327.32 E

Grid Co-ords.: 80W | 12N

All symmetry determinations looking

NW with SZ dipping

Elevation: 1302.09

SW with dip azimuth 230.

Total Depth: 119.5 M

Purpose: _____

RE
Logged by: PN

Date(s) Logged: JUNE 12-14 | 80

Drilling Contractor: _____

Core: Size From To

BQ 0 EOH

Collar Cased and Capped: _____

Started: 23/9/76

Completed: 25/9/76

Cyprus Anvil Mining Corp.

Diamond Drill Core Log

DDH 75-A163

Code	Drillhole	Elevation	Northing	Easting	Comments
1	2 8	10 16	17 24	25 32	34 48
T	75-A163	13021.1	9052991.6	5923271.3	METRICS

Code	Drillhole	Depth	Zenith Angle	True Azimuth	Comments
1	2 8	10 14	22 26	28 32	34 56
R	75-A163	0 0	180.0	0.0	ATCOLLAR
R	75-A163	82.9	174.2	104.0	SPERRY SUN
R			.	.	
R			.	.	
R			.	.	
R			.	.	
R			.	.	
R			.	.	
R			.	.	
R			.	.	
R			.	.	
R			.	.	
R			.	.	
R			.	.	
R			.	.	
R			.	.	

Code	Drillhole	Comments, Errant Remarks, Snivellings and/or Lewd Suggestions
1	2 8	10 47

DDH 76-A163 (2–8)

Cyprus Anvil Mining Corp.
Lithologic Log

Logged By: PN

Code	From	To	Unit	Code	Description
L	00	91	1		o/B
5D*del L	91	125	2	5D*	massive w/ laminated ankerite blebs; qtz-ankerite lenses;
5B2*del L	125	132	3	5B2*	minor graphite — fault likely
L	13.2 14.3	14.3 23.5	4	5D4* del 5C4*	14.4–17.4 (4D0) no core; siliceous from 18.6–19.5m; mottled from 17.4–21.3m.; thin siliceous bands throughout;
L	235	244	5	4L0	minor py, gal, sph, qtz bands
L	244	260	6	5D4*	OQO from 24.4–24.7m; 24.7–25.0m messed up; 5D16; 25.3–25.9m altered 5D w/ thin qtzose bands; minor py, sph, mariposite
L	260	299	7	4A2	large porphyroblasts of py (<6 mm in diameter); [4A12 +3G2 finely interla.] f-gr. sph & gal.; thin occurrences (<1 cm) of 4D0 at 29.0 & at 29.8m;
L	299	361	8	4B4	py rare; abundant sph w/ lesser gal.; 31.1–32.6m "mud" no core
L	361	430	9	4A4	w/ sph, lesser gal; py locally porphyroblastic; generally f-gr.; 5D6 w/ calcareous-qtz bands (<4 cm. in thickness) bet. 41.7–42.0m. [4A14 phyllitic + C partings +3G2 finely interla.]
L	430	504	10	5D4*	interbands of (4A0) from 43.3–43.5m; at 44.0; from 44.8–45.4, 47.5–48.6m; calcite-bearing OQO from 43.5–44.0m; at 45.4m, 45.7–45.8, and from 45.9–46.0m. Brciated fw. etc
L	504	556	11	4A4	w/ abundant sph lesser gal, py [4A14 phyllitic + C partings]
L	556	641	12	3G9 ~~5B0~~	gouge from 61.6–62.0m, 63.2–63.4m; no core from 63.4–64.0m; few qtz bands; OQO from 57.0–57.1m
L	641	664	13	5A19 (4A0) ~~5A9~~	few calcite blebs; diss. py in qtzose layers & as stringers; lesser sph & gal.
L	664	718	14	4A4	w/ py, sph & lesser gal (18% PbZn) [4A41 ± 3G2 (4A1+3G2) (4E4 near H.W)]
L	718	737	15	4D4	w/ minor calcite blebs & bleached phyllite clasts; 5D0 w/ 4E4 (4D45) (5D4) ± * ank blebs minor mariposite & ankerite from 72.7–73.0m (20% PbZn)
L	737	753	16	5D0	abundant calcite blebs from 73.8–74.0m.; 3 cm. of 4D4 at 74.4m; 3 cm. of 4E0 at 75.0m;
L	753	768	17	4C0	4D4 from 75.3–75.4m.; 5A9 from 75.7–75.9m, & 76.5–76.6m; 5D0 from 76.2–76.3m 4E1 (4E4 @H.W) (4A partings) (5D0)
L	768	790	18	4D0	10% PbZn; minor py & graphite; 77.4–77.7m 5D0; 4C0 from 77.7–77.8m.; 78.5–79.0m 5B0; 4D4 (4E4) (5D0) (4E1)
L	790	855	19	4L6	OQO w/ calcite blebs from 79.3–79.5m. & 81.6–82.2m; minor qtz lenses & calcite blebs throughout; minor py, po blebs

DDH 76-A163 (2–8)

Cyprus Anvil Mining Corp.
Lithologic Log

Logged By: PN

Code (1)	From (10–14)	To (16–20)	Unit (22–23)	Code (25–27)	Description
L	85 5	85 9	2 0	~~4C0~~	4E41
L	85 9	86 2	2 1	~~4A0~~	large py pebbles up to 1 cm. in diameter; minor sph 4A12
L	86 2	90 2	2 2	~~5A6~~ 5A19	~~4A0~~ w/ minor qtz veins; minor sph, py;
L	90 2	102 6	2 3	~~4A3~~	minor qtz veins & calcite blebs; thin layers of sph, gal throughout; rare po blebs; altered 5D4 w/ mariposite from 98.3–98.7, 98.8–99.2, 99.3–99.5m;
L	102 6	103 6	2 4	~~5D5~~ 5D4	qtz lenses w/ calcite blebs + py cubes; minor mariposite & sph. (4D4 intbd)
L	103 6	104 2	2 5	4D4	(4D45) (minor "cherty" clasts)
L	104 2	107 3	2 6	~~4A4~~ 4A4 (on assays)	w/ minor py; thin interbands of 5D0. 4A0/5D4 50:50
OK L	107 3	108 5	2 7	5B6	med. grey; few qtz bands; 108.2–108.5m ~~5D1~~; (5D4)
L	108 5	109 4	2 8	4A4	w/ py, sph & lesser gal 4A14
L	109 4	110 3	2 9	~~4E0~~ 4E4 (assays)	minor calcite blebs (4E1) 4E14 (assays)
L	110 3	112 4	3 0	4A4	w/ py, sph & lesser gal 4A0 ± 4 ± 3G2 finely interla
L	112 4	117 0	3 1	5B6	fault w/ siliceous pebbles; graphitic from 112.4–112.7m, 113.7–115.2m; fault w/ siliceous pebbles from 112.4–115.2m; minor py;
L	117 0	119 5	3 2	5D4	minor py; qtz-calcite lenses
		EOH			

see correction below

#23

90.2–91.4 4L12 carbonaceous transition 4A→4L

91.4–98.3 4A0 (4A3 @ HW)(4D4 @ 95.0) phyllitic +C partings ± 3G2 finely interla

98.3–99.8 5D4 [5F4?] + marip blebs, ank, ser (4D4 interbedded ~ 20% of interval)

99.8–102.6 4A0 low grade

DDH 76-A-163 (2 / 8)

Cyprus Anvil Mining Corp.
Structural Log

Logged By: PN

Code	From	To	Feature	Sym	S_1 Dip Direct.	S_2 Dip Direct.	Description
	10 14	16 20	22 24	26	28 32	34 38	
S							o/B 0-9.1m.
S		1138	CS12			7630	
S		2155	CS12			5730	
S		2772	CS12			6030	
S		3515	CS12			5730	
S		4109	CS12			5430	
S		4766	CS12			7330	
S		5244	CS12			6930	
S		5688	CS12			7330	
S		6244	CS12			6630	
S		6886	CS12			7330	
S		7188	F12	S			R region 71.8-79.0m; generally massive sulphides w/ minor S sym. at 75.7m
S		7577	PS12			6730	
S		7900	F12	R			S sym 79.0-83.4m; minor H at 79.7m.
S		8100	CS12			8130	
S		8344	F123				Z sym. 83.4-87.6m
S		8688	CS12			5930	
S		8766	F12	E			S sym. 87.6-99.7m. (indefinite symmetry determinations bet. 91.4-99.7m).
S		9115	CS12			7330	
S		9700	CS12			5830	
S		9997	F12	S			M region 99.7-103.6m. Z/S= 60/40
S		10334	CS12			3330	
S		10366	F12	M			R region 103.6-104.2m; massive sulphides
S		10442	F12	R			S sym. 104.2-109.4m.
S		10744	CS12			5630	
S		10944	F12	S			R region 109.4-110.3m; massive sulphides
S		11103	F12	R			S sym. 110.3-119.5m
S		11116	CS12			4330	
S		11164	CS12			7530	
		EOH					

DDH 76-A-163 (2 / 8)

Cyprus Anvil Mining Corp.
Geochemical Log (Sampler's Copy)

Logged By: PN

Sampled By:

Code	From	To	Sample No.	Description			
1	10 14	16 20	22 (K.A.) 27	LENGTH	REC.	UNIT	
P	11158	11174	171115	B 1.6	0.15	4DO	KA sample
P	12159	12169	171116	B 1.0	0.9	4AZ	
P	12169	12184	171117	B 1.5	1.1	4AZ	
P	12184	12199	171118	B 1.5	1.18	4AZ	
P	12199	13111	171119	B 1.2	0.53	4B4	
P	13111	13126	171210	B 1.5	0.11	4B4	
P	13126	13146	171211	B 2.0	0.17	4B4	
P	13146	13155	171212	B 0.9	0.85	4B4	
P	13155	13185	171213	B 3.0	3.0	4B4/4A4	
P	13185	14115	171214	B 3.0	2.2	4A4	
P	14115	14300	171215	B 1.5	1.0	4A4	
P	14300	14544	171216	B 2.4	2.2	4A4	
P	15104	15130	171217	B 2.6	1.27	4A4	
P	15130	15156	171218	B 2.6	2.0	4A4	
P	16164	16179	171219	B 1.5	1.45	4A4	
P	16179	16194	173110	B 1.5	1.4	4A4	
P	16194	17107	173111	B 1.3	1.3	4A4	
P	17107	17118	173112	B 1.1	1.1	4A4	
P	17118	17377	173113	B 1.9	1.6	4D4	
P	17377	17553	173114	B 1.6	1.4	5DO(W) minor 4D4,4EO	
P	17553	17668	173115	B 1.5	1.5	4CO	
P	17668	17887	173116	B 1.9	1.9	4DO	
P	17887	17992	173117	B 0.5	0.5	4DO	
P	18155	18622	173118	B 0.7	0.67	4CO/4AO	
P	19117	19123	173119	B 0.6	0.6	4A3	
P	19123	19139	174102	B 1.6	1.45	4A3	
P	19139	19555	174111	B 1.6	1.6	4A3	
P	19555	19887	174122	B 3.2	3.2	4A3	
P	19887	11010 2	174133	B 1.5	1.5	4A3	
P	11013 6	11042	174144	B 0.6	0.6	4D4	
P	11014 2	11015 8	174155	B 1.6	0.42	4A4	
P	11015 8	11017 3	174166	B 1.5	0.55	4A4	
P	11018 5	11019 4	174177	B 0.9	0.7	4A4	
P	11019 4	11109	174188	B 1.5	1.2	4EO/4A4	
P	11109	11124	174199	B 1.5	1.4	4A4	

Logged 1980, Checked (JSM) 1981

DDH 76-A-163 (2 / 8) Cyprus Anvil Mining Corp

Page ____ of ____

Logged by PN

ASSAY LOG (SAMPLER'S COPY) Date ____ Sampled by ____

CODE	FROM	TO	SAMPLE	INTR.	REC (m)	UNIT	DESCRIPTION	
1	10 14	16 20	22 26	28 30	32 34	36 40	42	
P	1216.0	1218.0	84774	2.0	2.0	4A1112	+3GZ	#7
P	1218.0	1299	84775	1.9	1.7	4A1112	+3GZ	#7
P	1299	1346	84776	1.47	1.6	4B141	note poor rec'vy	#8
P	1346	1361	84777	1.5	1.5	4B141		#8
P	1361	1380	84778	1.9	1.9	4A114	phyllitic + C partings +3GZ	#9
P	1380	1398	84779	1.8	1.8			#9
P	1398	1415	84780	1.7	1.6			#9
P	1415	1430	84781	1.5	1.5			#9
P	1504	1539	84782	3.5	3.6	4A114	phyllitic + C partings	#11
P	1539	1556	84783	1.7	1.6			#11
P	1664	1684	84784	2.0	1.7	4A141	±3GZ (4A1 +3GZ) (4E4)	#14
P	1684	1702	84785	1.8	1.8			#14
P	1702	1718	84786	1.6	1.6			#14
P	1718	1737	84787	1.9	1.9	4E141	(4D4) (4D45) (5D4) ±x	#15
P	1737	1753	84788	1.6	1.6	5D10	(4E±4)	#16
P	1753	1768	84789	1.5	1.5	4E111	(4E4@H.w) (4A partings) (5D0)	#17
P	1768	1790	84910	2.2	2.2	4D141	(4E4) (5D0) (4E1)	#18
P	1914	1933	84911	1.9	1.9	4A101	phyll+C, ±3GZ (4A3) (4D4)	#23
P	1933	1954	84912	2.1	2.1			#23
P	1954	1966	84913	1.2	1.2			#23
P	1966	1983	84914	1.7	1.7			#23
P	1983	1998	84915	1.5	1.5	5D141	[5F4?] (4D4)	#23-A
P	1998	11012.6	84916	2.8	2.8	4A101	low grade	#23-B
P	11012.6	11013.6	84917	1.0	1.0	5D141	(4D4)	#24
P	11013.6	11014.2	84918	1.06	1.05	4D141	(4D45)	#25
P	11014.2	11017.3	84919	3.1	1.6	4A101	=5D4	#26
P	11017.3	11085	—			5B161	No sample 0%	#27
P	11018.5	11019.4	85010	0.9	0.8	4A1 14		#28
P	11019.4	11103	83101	0.9	0.8	4E111		#29
P	11103	11124	83102	2.1	2.0	4A101	±4 ±3GZ	#30
P	8556	8624	83103	0.7	0.6	4E141	+ 4A12	#20+21

#1 #2 #3 #5 #4

DDH EAGA163 (2 Meters 8)

Cyprus Anvil Mining Corp.

Structural Log

Page _____ of _____

Date: _____ Logged By: PN/DSJ

Code	From	To	Feature	Sym	S_0 Dip Direct.	S_1 Dip Direct.	S_2 Dip Direct	Description
1	10 14	16 20	22 24	26	28 32	34 38	40 44	
F	247	250	B					broken
F	311	316	NM?					mud, no core
F	616	620	G					gouge
F	632	634	G					"
F	634	640	N					no core
F	859	862	R,C?					ground core, "pebbles"
F	1124	1152	R,F					" " , "
F	1144	1174	N,F?					
F		504	X					

DIAMOND DRILL RECORD

LOGGED BY [signature]

D.D.H. Nº 76-A163 PAGE 1 of 8

PROPERTY: GRUM JOINT VENTURE, Y.T.

	CO-ORDS	GRID		
LATITUDE	11,092.380 N	12 N	STARTED	Sept. 23/76 D.S.
DEPARTURE	7,642.509 E	80 W	COMPLETED	Sept. 25/76 N.S.
ELEVATION	1312.691	Surface	PROPOSED DEPTH	102 m
			ULTIMATE DEPTH	119.5 m

HOLE SURVEY:

DEPTH	BEARING	DIP
COLLAR		-89°
272' = 82.9 m	102°	-84.2°

CLAIM Nº

N

DIRECTION AND DISTANCE FROM N.E. CLAIM POST

Interval From	Interval To	DESCRIPTION	Recovery	Sample Nº	Interval From	Interval To	Sample Length	Assay Pb	Assay Zn	Assay Ag	Assay Au	Assay Cu	Assay x Pb	Assay x Zn	Assay x Ag
0	9.1	OVERBURDEN. Triconed.	NIL / 9.1		0	9.1									
9.1	12.5	QTZ-SER-CHL PHYLLITE (SC) Greenish Gray.													
		55% qtz, 15% chl. Massive, not well foliated.	0.95 / 2.2		9.1	11.3									
		15% rusty fractures. Oxidation to 12.4 m.	0.75 / 1.2			12.5									
		C.A. F2 = 80°. F1 local, 90° to F2 @ 10.5 m.													
12.5	14.3	QTZ-SER-GRAPH PHY (SG) (Sb)													
		Sericitic phy w/ 3% graph to 13.4 m (?). Siliceous, light	0.55 / 1.8		12.5	14.3									
		gray buff ser. phy @ 13.4 - 14.3 m (?).													
		C.A. F2 = 80°. F1 = 40-90° to F2.													
14.3	15.8	FAULT? or SHEAR?													
		Recovered 4 cm of qtz vein plus a few chips of phy, plus	0.05 / 1.5		14.3	15.8									
		a smear of mud.													

LOGGED BY [signature] D.D.H. Nº 76-A163 PAGE 2 of 8

Interval From	Interval To	DESCRIPTION	Py	Pz	Recovery	Sample Nº	Interval From	Interval To	Sample Length	Assay Pb	Assay Zn	Assay Ag	Assay Au	Assay Cu	Assay x Pb	Assay x Zn	Assay x Ag
15.8	17.4	QTZ-SULPH-SER (Ps) Bleached Buff.															
		Poor recovery, chips & ground core of Qtz-Sulph plus	1	5	0.15	A 715B	15.8	17.4	1.6	1.83	1.13	20.23	✓				
		4 cm of qtz vein. Possible muddy seam. $F_2 = 70°$															
17.4	23.5	TALC - CHLORITE-QTZ (Tc)															
		Massive, soft, white w/ green lenses & blebs chlorite.			1.0/1.5		17.4	18.9									
		C.A. $F_2 = 60°$ @ 17.6 - 18.5 - 21.5m.			0.12/0.6			19.5									
		$F_1 = (45° \text{ to } F_2 \text{ @ } 19.8)$? = ∥ core.			2.1/2.4			21.9									
		Splash of galena @ 21.6m.			0.04/1.6			23.5									
23.5	25.9	QTZ SER PHY (Sb) Bleached Buff.															
		45-60% qtz, < 0.1% py, 0.2 PZ.			2.0/2.4		23.5	25.9		0.2 PZ, est.							
		Phyllitic breccia @ 24.75 - 25m. Qtz vein @ 24.1-24.75m.															
		C.A. $F_2 = 50°$. $F_1 = 90°$ to F_2 @ 25.4m.															
25.9	43.0	QTZ - SULPHS - GRAPH ± SER (Pgts)															
		70-85% qtz, 1-10 py, 0.5-8 PZ, highly variable.	2	1.5	0.9	A 716B	25.9	26.9	1.0	1.58	2.35	22.29	✓				
		Generally, dissem. sulphs in qtzose bands in F_2, also in F_1.	10	4.5	1.1	717B		28.4	1.5	4.03	3.16	42.51			6.05	4.74	63.77
		34.6 - 36.9m: no graph, a few foliations of buff ser.	10	8	1.18	718B		29.9	1.5	4.80	5.45	50.40			7.20	8.18	75.6
		Rock siliceous & hard, more phyllitic sections parts readily	1	4	0.53	719B		31.1	1.2	2.48	4.10	33.20			2.98	4.92	39.91
		as 25.9 - 29.5m. Generally, 1-4% graph-ser.	1	3	0.11	720B		32.6	1.5	2.63	2.55	30.17			3.95	3.83	45.26
		38.1 - 40.1m: brecciated.	15	6	0.17	721B		34.6	2.0	2.78	2.95	35.31			5.56	5.90	70.62

LOGGED BY [illegible] D.D.H. Nº 76-A163 PAGE 3 of 8

Interval From	Interval To	DESCRIPTION	By	Pz	Recovery	Sample Nº	Interval From	Interval To	Sample Length	Assay Pb	Assay Zn	Assay Ag	Assay Au	Assay Cu	Assay x Pb	Assay x Zn	Assay x Ag
		C.A. F_2 = 50° to 29m, 75-85-75 @ 29-31m, 75-80° @ 31-	0.2	2.5	0.85	A 722B	34.6	35.5	0.9	1.88	5.00	36.34			1.69	4.50	32.71
		37.5, contorted 40-70° @ 38-40m, 40° @ 40.3 -	3	3	3.0	723B		38.5	3.0	2.00	4.58	31.20			6.00	13.74	93.60
		40.7m, 55° @ 41.2 - 42.8m.	1	3	2.2	724B		41.5	3.0	1.98	4.05	26.40		x1.5	5.94 2.97	12.15 6.08	79.2 39.6
		F_1 = 90° to F_2 @ 26.4m, 40° @ 29.5, 90° @ 30.4, 35.9,	3	5	1.0	725B		43.0	1.5	3.88	6.43	48.34			5.82	9.65	72.51
		60° to F_2 @ 36.4 to 37, 90° @ 37.2, 60° @ 40.6m.															
43.0	50.4	QTZ-SER ± GRAPH SULPHS (SP) Bleached Buff															
		Mainly bleached buff ser phy, part siliceous & massive	0.2	1.0	2.2	A-726B	43.0	45.4	2.4	1.20	2.38	16.11	✓				
		gray buff ser phy. Sulph mineralization @ sporadic intervals.	0	0	2.1/2.1			47.5									
		C.A. F_2=60° @ 43-44.4m, 75° to 47.5, 80° @ 47.6-49.5m.	1	3	0.75/0.9			48.4		3 PZ, est.							
		47.5-48.4m: Qtz-Sulph-Graph, 1 py, 3 PZ. (F_2+F_1)	0	0	1./2.0			50.4									
		F_1 = 80° to F_2 @ 47.6m.				WT. Av.	26.9	31.1	4.2	3.86	4.25	42.69			16.23	17.84	179.28
						"	31.1	34.6	3.5	2.72	2.78	33.11			9.51	9.73	115.88
50.4	55.6	QTZ-SULPHS-SER-GRAPH (PSG)				"	34.6	41.5	6.9	1.98	4.4	29.78			13.63	30.39	205.51
		70% qtz, 3 graph, 5 py, 5 PZ. F_2 also F_1 minzn.				"	40.0 34.6	43.0 43.0	3.0 8.4	2.93 2.32	5.24 4.77	37.37 33.1			8.79 19.45	15.73 40.04	112.11 273.02
		Quartzy, parts readily along F_2, also show many	4	4.5	1.27	A 727B	50.4	53.0	2.6	3.35	6.17	52.46			8.71	16.04	136.40
		fractures @ 10° to core.	6	6.5	2.0	728B		55.6	2.6	2.23	4.00	29.14		x0.4	5.80 0.89	10.4 1.6	75.76 11.66
		C.A. F_2 = 85-90°. F_1 = 45-90° to F_2, fair to good.				WT. Av.	(54.6 50.4	55.6 54.0	1.0) 3.6	3.04	5.57	45.9			(2.23 10.94	4.00 20.04	29.14 165.54)
						WT. Av.	50.4	55.6	5.2	2.79	5.08	40.8			14.51	26.44	212.16
55.6	64.1	QTZ-SER PHY (S) Med. Gray				"	50.4	53.4	3.0	3.20	5.88	49.35			9.60	17.64	148.06
		Sericitic, banded phyllite. Two main shears @ 61.5-			0.45/1.4		55.6	57.0		possible shear or fault							
		62.5m and @ 63.3-64m, both probable faults. Much			0.37/3.0			60.0			"	" "	"				

LOGGED BY J. Chow D.D.H. Nº 76-A163 PAGE 4 of 8

Interval From	Interval To	DESCRIPTION	Py	PZ	Recovery	Sample Nº	Interval From	Interval To	Sample Length	Assay Pb	Assay Zn	Assay Ag	Assay Au	Assay Cu	Assay x Pb	Assay x Zn	Assay x Ag
		crushing ∥ foliation.			0.4 / 1.3		60.0	61.3									
		C.A. F_2 = 85° @ 56.5m, 58.5-60, 45-70° @ 60.3m,			0.9 / 1.2			62.5									
		70° @ 62.3-63m.			0.8 / 1.6			64.1									
		F_1 = sub.v. to F_2 @ 60.3m, 90° @ 62.6m.															
64.1	71.8	QTZ-SULPH-GRAPH (PG)															
		65% qtz, 4-10 graph, 0.5-8 py, 0.2-8 PZ.	5	0.1	/ 2.3		64.1	66.4									
		Dissem. sulphs in qtzose bands (F_2), minor amounts in F_1.	8	6	1.45	A 729B		67.9	1.5	3.38	7.26	59.31			5.07	10.89	88.97
		H.G. PbZn bands occur @ 66.4-66.75m (18% PZ).	7	5	1.4	730B		69.4	1.5	2.08	4.85	34.29			3.12	7.28	51.44
		C.A. F_2 = 80-85° @ 64-66m, 75° @ 66.4-69, 80° @ 69-70.5m	4	3	1.3	731B	(69.4	70.0 70.7	0.6 1.3)	1.65	3.38	23.31	✓		(0.99	2.03	13.99)
		70-90° @ 70.5-71.3m	1	0.2	1.1	732B		71.8	1.1	0.48	0.63	6.17	✓				
		F_1 = 75° to F_2 @ 64.7m, 90° to F_2 @ 66.2-66.6m, 45-90° @ 68.3-69.8m,				WT. Av.	66.4	70.0	3.6	2.55	5.61	42.9			9.18	20.20	154.39
		90° @ 70-70.4m, 45-60° to 71.5m.				WT. Av.	66.4	69.4	3.0	2.73	6.06	46.80			8.19	18.17	140.41
						"	71.8	74.8	3.0	5.08	9.30	81.81			15.23	27.91	245.43
71.8	79.3	MIXED ZONE of MASSIVE SULPHS w/ Qtz-Ser-Chl + Qtz-Graph Phy + Qtz-Ser. Phy.				"	75.3	78.7	3.1	0.98	2.28	15.55			3.04	7.07	48.21
		Irregular intervals of massive sulphs, Qtz-Ser-Chl & Qtz-Ser &				" "	78.7 71.8	79.2 78.7	2.4 6.9	4.70 4.05	11.01 8.26	73.05 42.7			11.28 27.95	26.42 57.02	175.33 294.93
		Qtz-Graph Phyllites. Massive sulphs are generally massive py	25	12	1.6	A 733B	71.8	73.7	1.9	7.48	13.40	121.03		o	14.21	25.46	229.96
		w/ minor PZ and H.G. PbZn w/ low py. Phyllites usually	0.1	0.1	1.4	734B		75.3	1.6	0.93	2.23	14.06		x1.1 o	1.02 1.49	2.45 3.57	15.47 22.50
		barren of sulphs.	30	0.8	1.5	735B		76.8	1.5	1.03	2.33	17.14		o	1.55	3.50	25.71
		71.8-72.9m : Mass. Sulph & Qtz-Sulphs, 25 py, 26 PZ.	20	11	1.9	736B		78.7	1.9	5.63	12.89	87.77		o	10.70	24.49	166.76
		-73.2 : Buff Ser	1	2	0.5	737B		79.2	0.5	1.15	3.85	17.14			0.58	1.93	8.57
		-73.7 : Qtz-Sulph, Mass. Sulphs, 20 py, 12 PZ															

LOGGED BY [signature] D.D.H. Nº 76-A163 PAGE 5 of 8

Interval From	Interval To	DESCRIPTION	Recovery	Sample Nº	Interval From	Interval To	Sample Length	Assay Pb	Assay Zn	Assay Ag	Assay Au	Assay Cu	Assay x Pb	Assay x Zn	Assay x Ag
		-75.3m : Qtz-Ser-Chl Phy, 15 chl, 2/6cm bands H.G. PbZn.													
		-75.9 : Qtz-Ser, Mass. Py, Qtz-Graph bands Av. 20 py, 1 PZ.													
		-76.1 : Mass. Py, no PZ.													
		-76.8 : Qtz-Ser-Chl, Mass Py, Qtz-Graph Av. 15 py, 0.1 PZ.													
		-77.5 : Qtz-Sulph. 5 py, 9 PZ.													
		-77.7 : Qtz-Ser-Chl.													
		-77.85 : Mass. Py.													
		-78.7 : Mass. PZ and Qtz-Sulph, 20 py, 24 PZ.													
		-79.2 : Qtz-Graph & Qtz-Ser-Chl & 4/2cm bands H.G.													
		C.A. F_2 = 60-70° to 78.5m, 80° @ 78.6 - 79.3m													
		F_1 = 70° to F_2 @ 72.2m, 75.3, 90° @ 70.2, 78.8m													
79.3	85.5	QTZ-SER-SUPHS PHY (SbP) Bleached Buff.													
		55-65% qtz, 3 py, a few blebs po, minute blebs	6.2/6.2		79.3	85.5									
		PZ w/ py (0.1% PZ). well foliated phyllite.													
		C.A. F_2 = 80-75-80°.													
		F_1 = 80-90° to F_2, locally evident.													
85.5	90.2	QTZ-SER-GRAPH-SUPHS (SGP) Med. Gray. Py 35 PZ 7	0.67	A 738 B	85.5	86.2	0.7	3.48	4.31	53.49	✓				
		50% qtz, 3 graph, 2 ankerite(?) - blebs tan mineral	2.6/2.8		86.2	89.0									
		dissem. within qtzose bands, negli py, odd bleb po, 0.5%	0.5/0.5			89.5									
		PZ @ 89.0 - 89.5m. 85.5-85.75m: mass. sulphs, 55 py, 11 PZ,	0.7/0.7			90.2									

LOGGED BY [signature] D.D.H. Nº 76-A163 PAGE 7 of 8

Interval From	Interval To	DESCRIPTION			Recovery	Sample Nº	Interval From	Interval To	Sample Length	Assay Pb	Assay Zn	Assay Ag	Assay Au	Assay Cu	Assay x Pb	Assay x Zn	Assay x Ag
103.6	108.5	MIXED ZONE of MASSIVE SULPHS, QTZ-SULPS, SER + GRAPH PHY.															
		103.6 - 104.2(?)m: Mass Sulphs, 25 Py, 30 PZ. (Tube not locked. Next run ground core.)															
		- 105.8 : Qtz-Sulph-Graph + Ser, 5 py, 6 PZ.	25	30	0.6	A 744B	103.6	104.2	0.6	4.86	16.20	130.97			4.72	9.72	78.58
		- 107.3 : Qtz-Sulph-Ser-Graph, 1 py, 2.5 PZ.	5	6	0.42	745B		105.8	1.6	2.35	5.20	40.46			3.76	8.32	64.74
		- 107.7 : Light Gray Ser Phy, barren.	1	25	0.55	746B		107.3	1.5	0.98	3.18	14.06	✓		1.47	4.77	21.09
		- 108.3 : Ser-Graph Phy, " .	0	0	1.2/1.2			108.5									
		- 108.5 : Buff, siliceous ser. phy, negli. sulphs.															
		C.A. F_2 70° @ 104m, 50° @ 105-106, 65° @ 108m.				WT. Av.	103.6	~~107.3~~ 105.8	2.2	3.85	8.2	65.15			8.48	18.04	143.32
		F_1 sub-v. F_2 @ 108m				" "	103.6	107.3	3.7	2.69	6.16	44.4			9.95	22.81	164.41
108.5	112.4	QTZ-SULPHS-GRAPH(Pa) and MASS. SULPHS (M.)															
		Siliceous Qtz-Graphite w/ dissem. sulphs in F_1, and	15	6	0.7	A 747B	108.5	109.4	0.9	2.15	4.66	35.31			1.94	4.19	31.78
		massive pyritic sulphs @ 109.4 - 110.3m.	40	7	1.2	748B		110.9	1.5	5.48	6.82	87.77			8.22	10.23	131.66
		C.A. F_2 = 70° @ 108.7 - 109m, 75-70° @ 110.6,	10	7	1.4	749B		112.4	1.5	2.68	5.30	44.31			4.02	7.95	70.97
		85° @ 111-112.2m. F_2/F_1 distinct.															
		F_1 = 60° to F_2 @ 108.7m, 60° @ 109.7m (F_1?) - 110.2m,				WT. Av.	108.5	112.4	3.9	3.64	5.74	60.1			14.18	22.37	234.41
		60° to F_2 @ 110.9, 40° @ 111.4, 45-80° @ 111.6 - 112.3m.															
		F_1 excellent, up to 6 cm forms.															
112.4	115.2	FAULT															
		112.4 - 113.1m: sheared & crushed, graphitic to 112.7m,			2.7/2.8		112.4	115.2									
		buff & sericitic to 113.1m.															

LOGGED BY J. Chow D.D.H. Nº 76-A163 PAGE 8 of 8

Interval From	Interval To	DESCRIPTION	Recovery	Sample Nº	Interval From	Interval To	Sample Length	Assay Pb	Assay Zn	Assay Ag	Assay Au	Assay Cu	Assay x Pb	Assay x Zn	Assay x Ag
		113.1 – 113.7': mod. gray fine breccia mixed w/ gougey mud, also crush'd phyllite.													
		-115.2 : sheared & crushed, gougey, black.													
115.2	117.0	QTZ-SER PHY (S) Light + Med Gray.													
		Siliceous light phy to 116.4', highly sheared.	0.45/1.2		115.2	116.4									
		Sericitic & fissile @ 116.4 – 117.' Lower contact	0.5/0.6			117.0									
		80% sheared & brecciated.													
		C.A. F_2 = 70° @ 115.2, 80° @ 116.4-117'.													
117.0	119.5	QTZ-SER PHY (Sb) Bleached Buff.													
		55-60% qtz, somewhat massive, no sulphs.	1.85/2.5		117.0	119.5									
		C.A. F_2 = 75-80° . F_1 30-45° to F_2.													
	119.5	END OF HOLE.													
		REMARKS:													
		① The many "fingers" of sulph. mineralization encountered suggest the end of the upper mineralized zone.													
		② Hole cemented, using 11 bags cement.													

DDH: FAGA163 -- 42 DEGREE PROFILE

(VIEW AZIMUTH = 312 DEGREES)

ELEV:1302 592327E ; 905300N

PLUNGE ANGLE IS 11.0 TREND ANGLE IS 312.0

CORRECTED COLLAR POSITION: X = 741.8 Z = 1303.1

SECTION NAME: 80W

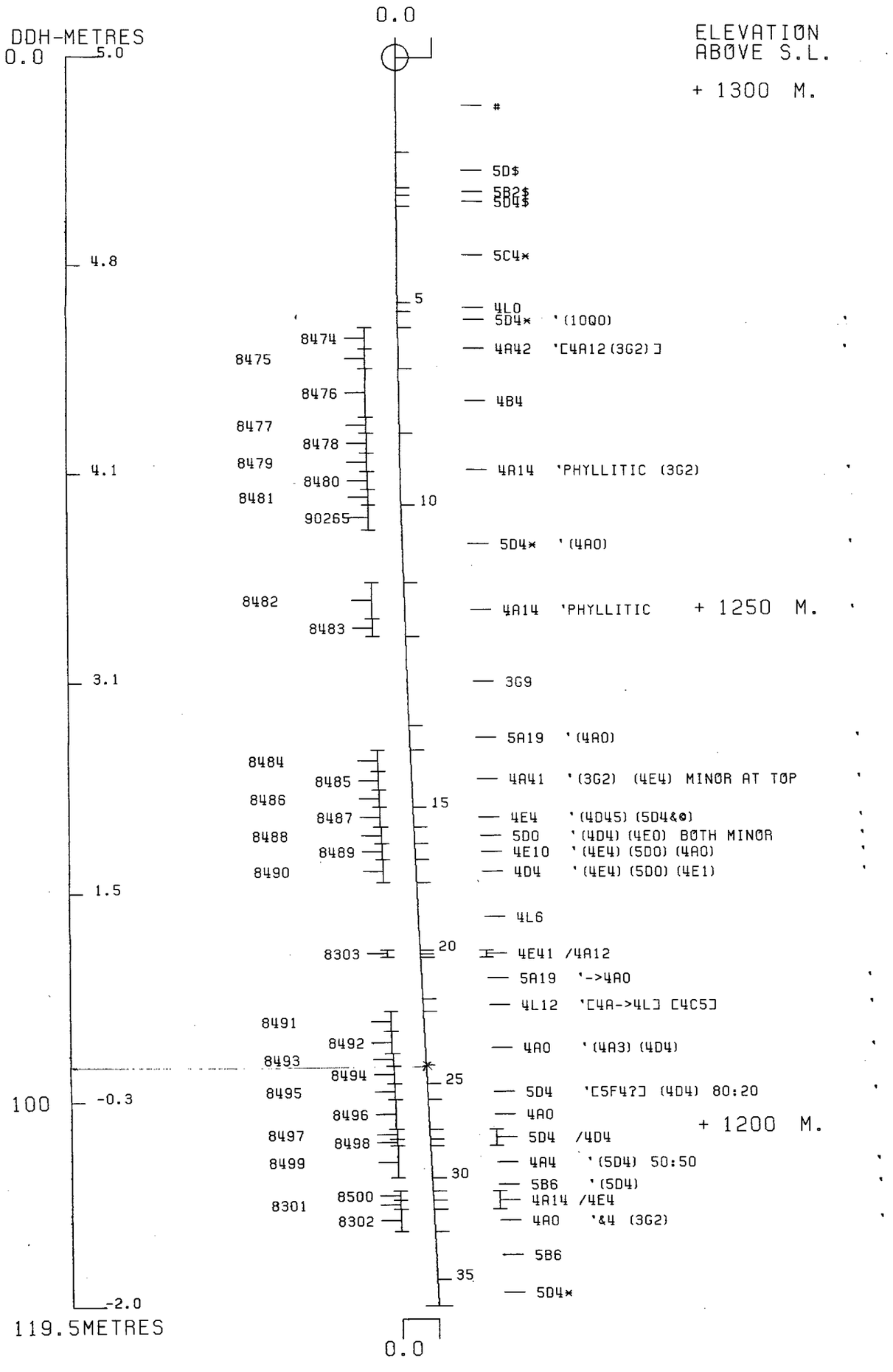

CYPRUS ANVIL MINING CORPORATION
PROGRAM DH162 29 JAN 1985 1:02 PM

DDH: FAGA163 -- 42 DEGREE PROFILE

(VIEW AZIMUTH = 312 DEGREES)

ELEV: 1302 592327E ; 905300N

PLUNGE ANGLE IS 11.0 TREND ANGLE IS 312.0

CORRECTED COLLAR POSITION: X = 741.8 Z = 1303.1

SECTION NAME: 80W

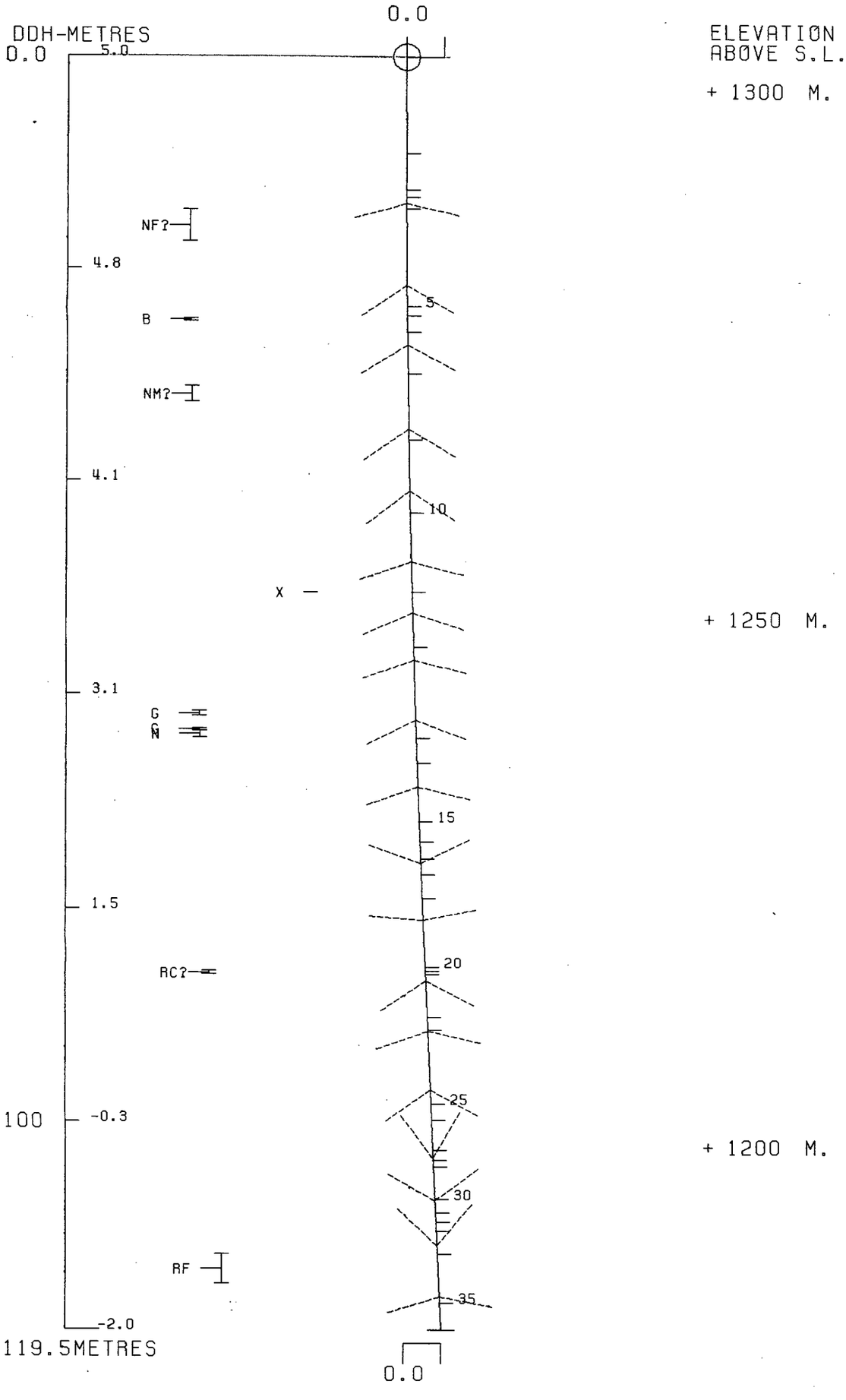

CYPRUS ANVIL MINING CORPORATION
PROGRAM DH161 30 JAN 1985 8:53 AM

76 A164

DRILL HOLE : FAGA164

NORTHING : 905,349.9

EASTING : 592,367.9

ELEVATION : 1,302.2

TOTAL DEPTH : 110.3

SECTION : W 80

R.F.E. : S2

RFE DIRECTION: 230

PLUNGE ANGLE : 11

PLUNGE DIRECT: 312

DHD CALC: 1

SS CALC: 0

DETAIL RECORD COUNTS:

NOS ORE-SAMPLES:	4
NOS DOWN-H-SURVEYS:	2
NOS DOWN-H-LITHOLOGY:	35
NOS DOWN-H-STRUCTURE:	25
NOS DOWN-H-FAULTS:	9
NOS DOWN-H-SPLINES:	2
NOS COMPOSITES:	0

DDH: FAGA164 UTM-N: 905,349.9 UTM-E: 592,367.9 UTM-ELEV: 1,302.2 TOTAL DEPTH: 110.3 SECTION: W 80
RFE: S2 RFE DIP: 230 PLUNGE ANGLES: 11 312 DHD CALC: 1 SS CALC: 0

DEPTHS FROM	DEPTHS TO	SAMPLE NO.	INT.	REC.	ROCK UNIT	S.G. PULP	ASSAYS CU %	PB %	ZN %	AG(AA) G/MT	AG(FA) G/MT	AU(FA) G/MT	PO %	PY %	TOT FE	BAO %	HG %	MN %	AS %	BA %	S.G. W.R.
83.2	84.9	05141	1.7	1.5	5A0	2.88	.01	.71	2.03	17.00		.07	1	2	3						
84.9	86.4	05142	1.5	.7	4A4	2.85	.01	1.57	3.63	35.00		.07	1	1	2						
86.4	87.9	05143	1.5	.8	4A4	2.89	.02	1.30	4.35	23.00		.07	4	17	21						
87.9	89.4	05144	1.5	.4	4A0	2.83	.01	.67	2.39	11.00		.07	1	21	22						
WEIGHTED AVERAGE																					
83.2	89.4		6.2	3.4		2.86	.01	1.05	3.06	21.35		.07	1	10	12						

DDH: FAGA164 UTM-N: 905,349.9 UTM-E: 592,367.9 UTM-ELEV: 1,302.2 TOTAL DEPTH: 110.3 SECTION: W 80
RFE: S2 RFE DIR: 230 PLUNGE ANGLES: 11 312 DHD CALC: 1 SS CALC: 0

DEPTH	ZENITH	AZIMUTH
0.000	180.000	0.000
82.900	174.200	104.000

DDH: FAGA154 UTM-N: 905,349.9 UTM-E: 592,367.9 UTM-ELEV: 1,302.2 TOTAL DEPTH: 110.3 SECTION: W 80
RFE: 52 RFE DIR: 230 PLUNGE ANGLES: 11 312 DHD CALC: 1 SS CALC: 0

DEPTH	UNIT	CODE	DESC	RECOVERY	IND
7.3	0001	#		0.0	1
9.9	0002	5D0		0.0	1
11.7	0003	5B80		0.0	1
12.2	0004	5DC		0.0	1
19.0	0005	5B80	(5D0)(5B0)	0.0	1
20.4	0006	5C4*		0.0	1
27.4	0007	5D0	(10Q0)	0.0	1
31.1	0008	5DC		0.0	1
31.9	0009	5B62		0.0	1
32.1	0010	5D4@		0.0	1
32.7	0011	5B62		0.0	1
34.1	0012	5D4$		0.0	1
42.0	0013	3G9$	&3	0.0	1
54.3	0014	5D0	(5B0)70:30	0.0	1
56.5	0015	5B0	&$	0.0	1
59.3	0016	4L6	(5D$)	0.0	1
59.6	0017	5A19	->4A0	0.0	1
60.0	0018	4L2		0.0	1
64.3	0019	5A0	->5A19 NOT 4A0	0.0	1
64.8	0020	4L12		0.0	1
72.2	0021	5A0	->5A19 NOT 4A0	0.0	1
81.0	0022	5A0	(5D4*)	0.0	1
83.5	0023	5A0	->5A19(4A0)	0.0	1
89.4	0024	4A4	&0	0.0	1
90.0	0025	5D4$		0.0	1
91.0	0026	5B2$	&8	0.0	1
94.6	0027	5D0		0.0	1
95.7	0028	5B0		0.0	1
97.5	0029	5B80	(5D0)(5C4*)	0.0	1
98.2	0030	5C4*		0.0	1
101.0	0031	5B80	(5D0)	0.0	1
104.8	0032	5D0		0.0	1
106.5	0033	5B80	(5D0)(5B0)	0.0	1
107.6	0034	5D0		0.0	1
110.3	0035	5B80		0.0	1

DDH: FAGA164 UTM-N: 905,349.9 UTM-E: 592,367.9 UTM-ELEV: 1,302.2 TOTAL DEPTH: 110.3 SECTION: W 80
RFE: S2 RFE DIR: 230 PLUNGE ANGLES: 11 312 DHD CALC: 1 SS CALC: 0

DDH	F DEPTH	T DEPTH	FEAT	SYMTRY	S0 ANGLE	S0 DIRECT	S1 ANGLE	S1 DIRECT	S2 ANGLE	S2 DIRECT	RFE CDE	DHDC	SDC	PROCESS
FAGA164	0.0	10.2	CS2		0	0	0	0	67	230	0	1	0	0
FAGA164	0.0	15.1	CS2		0	0	0	0	65	230	0	1	0	0
FAGA164	0.0	20.3	CS2		0	0	0	0	66	230	0	1	0	0
FAGA164	0.0	27.4	CS2		0	0	0	0	63	230	0	1	0	0
FAGA164	7.3	31.2	CS2	S	0	0	0	0	0	0	0	1	0	0
FAGA164	0.0	33.1	CS2		0	0	0	0	65	230	0	1	0	0
FAGA164	31.2	36.6	CS2	Z	0	0	0	0	0	0	0	1	0	0
FAGA164	36.6	37.8	CS2	M	0	0	0	0	0	0	0	1	0	0
FAGA164	0.0	38.9	CS2		0	0	0	0	44	230	0	1	0	0
FAGA164	37.8	38.9	CS2	S	0	0	0	0	0	0	0	1	0	0
FAGA164	38.9	42.2	CS2	Z	0	0	0	0	0	0	0	1	0	0
FAGA164	0.0	46.3	CS2		0	0	0	0	72	230	0	1	0	0
FAGA164	42.2	50.3	CS2	S	0	0	0	0	0	0	0	1	0	0
FAGA164	0.0	52.6	CS2		0	0	0	0	79	230	0	1	0	0
FAGA164	50.3	56.0	CS2	Z	0	0	0	0	0	0	0	1	0	0
FAGA164	0.0	58.1	CS2		0	0	0	0	57	230	0	1	0	0
FAGA164	0.0	65.7	CS2		0	0	0	0	70	230	0	1	0	0
FAGA164	0.0	70.6	CS2		0	0	0	0	70	230	0	1	0	0
FAGA164	0.0	77.1	CS2		0	0	0	0	77	230	0	1	0	0
FAGA164	0.0	83.3	CS2		0	0	0	0	70	230	0	1	0	0
FAGA164	0.0	90.7	CS2		0	0	0	0	58	230	0	1	0	0
FAGA164	0.0	96.8	CS2		0	0	0	0	65	230	0	1	0	0
FAGA164	0.0	102.0	CS2		0	0	0	0	71	230	0	1	0	0
FAGA164	0.0	107.9	CS2		0	0	0	0	70	230	0	1	0	0
FAGA164	56.0	110.3	CS2	S	0	0	0	0	0	0	0	1	0	1

DDH: FAGA164 UTM-N: 905,349.9 UTM-E: 592,367.9 UTM-ELEV: 1,302.2 TOTAL DEPTH: 110.3 SECTION: W 80
RFE: 32 RFE DIR: 230 PLUNGE ANGLES: 11 312 DHD CALC: 1 SS CALC: 0

DDH	F DEPTH	T DEPTH	FEAT	REC CD	PARLL	UPPER PLANE		INTERNAL PLANE		LOWER PLANE		DHD
FAGA164	7.3	9.9	BR			0	0	0	0	0	0	1
FAGA164	9.9	11.7	BR			0	0	0	0	0	0	1
FAGA164	12.2	19.0	BRP	2		0	0	0	0	0	0	1
FAGA164	20.4	27.4	BR			0	0	0	0	0	0	1
FAGA164	27.4	31.1	G			0	0	0	0	0	0	1
FAGA164	31.1	31.9	P	5		0	0	0	0	0	0	1
FAGA164	32.1	32.7	P	3		0	0	0	0	0	0	1
FAGA164	45.4	45.6	G			72	0	0	0	72	0	1
FAGA164	72.2	81.0	GRF	3		0	0	0	0	0	0	1

CYPRUS ANVIL MINING CORPORATION

DIAMOND DRILL CORE LOG

Hole Number: 76-A164

Project: GRUM

Location: VANGORDA PLATEAU

Claim: _____

UTM
~~Terr.~~ Plane
Co-ords.: 6,905,349.90 N

592,367.88 E

Grid
Co-ords.: 80W/14N

_____

Elevation: 1302.2m

Total Depth: 110.3m

Fabric Orientation Diagram:

All symmetry determinations looking

NW with S2 dipping

SW with dip azimuth 230.

Purpose: _____

RE
Logged by: PN Date(s) Logged: JUNE 10/80

Drilling Contractor: _____

Core:	Size	From	To
	BQ	0	EOH

Collar Cased and Capped: _____

Started: 26/9/76 Completed: 29/9/76

Cyprus Anvil Mining Corp.

Diamond Drill Core Log

DDH 76-A164

Code	Drillhole	Elevation	Northing	Easting	Comments
1	2 8	10 16	17 24	25 32	34 48
T	76-A164	1302.2	905349.9	592367.9	METERS

you mean Faked.

Code	Drillhole	Depth	Zenith Angle	True Azimuth	Comments
1	2 8	10 14	22 26	28 32	34 56
R	76-A164	00	180.0	10.0	ATCOLLAR
R	76-A164	82.9	179.2	104.0	CALCULATED FROM
R			.	.	A1615
R			.	.	
R			.	.	
R			.	.	
R			.	.	
R			.	.	
R			.	.	
R			.	.	
R			.	.	
R			.	.	
R			.	.	
R			.	.	
R			.	.	

Code	Drillhole	Comments, Errant Remarks, Snivellings and/or Lewd Suggestions
1	2 8	10 47

DDH FAGH164 (2 / 8)

Cyprus Anvil Mining Corp.

Lithologic Log

Page _____ of _____

Date: 9 July 82 Logged By: DSJ

Code	From	To	Recov.	No.	Unit	Description
1	10 14	16 20	22 24	26 28	30 34	35
L	00	73		1	#	O/B
L	73	99		2	5D0	broken & rubbly
L	99	117		3	5B80	" "
L	117	122		4	5D0	
L	122	190		5	5B80	(5D0, 5B0), broken, rubbly horrible recy.
						<2m recd. no gouge
L	190	204		6	5C4*	mottled
L	204	274		8	5D0	(0Q0) broken & rubble thruout
L	274	311		9	5D0	gouge; no atts. poss.
L	311	319		10	5B62	0.4m recd.
L	319	321		11	5D4*	ank
L	321	327		12	5B62	.2m. recd.
L	327	341		13	5D4*	dol.
L	341	420		14	3G9*	±3 dol.
L	420	543		15	5D0	(5B0) 70:30; gouge 45.4-45.6m. // S_2
L	543	565		16	5B0	±* dol.; more dol. towards base of interval
L	565	593		17	4L6	(5D* dol)
L	593	596		18	5A19	⇒ 4A0
L	596	600		19	4L2	
L	600	643		20	5A0	⇒ 5A19 (not 4A0)
L	643	648		21	4L12	v. rusty
L	648	722		22	5A0	⇒ 5A19 (not 4A0)
L	722	810		23	5A0	gouge & rubbly core (5D4*); ≈2m. recd.
						major fault; no atts. poss.
L	810	835		24	5A0	⇒ 5A19 (4A0)
L	835	894		25	4A0	4A4±0 (on assays) <5%
L	894	900		26	5D4*	dol.
L	900	910		27	5B2*	±8 dol.
L	910	948		28	5D0	
L	948	957		29	5B0	
L	957	975		30	5B80	(5D0, 5C4* mot.)
L	975	982		31	5C4*	mottled
L	982	1010		32	5B80	(5D0)
L	1010	1048		33	5D0	
L	1048	1065		34	5B80	(5D0, 5B0)
L	1065	1076		35	5D0	
L	1076	1103		36	5B80	

no 7

Check KA

C.A.M.C. 1981 - E-3

DDH 76-A-16.4 (2 / 8)

Cyprus Anvil Mining Corp.
Lithologic Log

Logged By: PN

Code	From	To	Unit	Code	Description
	10 14	16 20	22 23	25 27	
L	10 0	73	1		O/B
L	73	312	2	5 D 10	thin minor py layers; highly siliceous from 13.7-16.8m; massive 5D alternating w/ laminated 5D; thin qtzose layers throughout unit; qtz veins from 16.7-16.8m and 25.0-25.3m.; gouge at 23.5m, 25.5m and 26.5m; gouge from 27.4-31.2m (fault?); 29.1-31.2m no core; poor recovery;
L	312	314 1	3	4 L 15	few py blebs; 5BO from 31.3-31.9m and 32.3-32.7m; siliceous from 31.9-32.3 and 32.7-34.1m
L	314 1	412 0	4	5 B 10	more calcareous below 38.0m.; minor py blebs & graphitic bands
L	412 0	514 3	5	5 D 10	w/ thin interbands of 5BO and calcareous 5B8; minor py blebs; lesser po; gouge at 42.0, 42.8, from 45.4-45.7m
L	514 3	516 0	6	5 B 10	minor py & po; few graphitic layers
L	516 0	519 4	7	5 D 10	slightly calcareous w/ minor py & siliceous layers;
L	519 4	894	8	5 A 10	4L0 w/ minor py from 59.7-60.0m; no core from 60.1-61.3m; 67.2-67.7m, 72.4-73.8; 74.1-75.3m; py assoc. w/ qtz & in fractures & in individual layers; 63.9-64.6m more siliceous & less graphite (5BO/5B8) w/ py; 5DO from 79.6-79.9m & 81.4-81.6m; & at 88.6m; sulphides generally increase from 81.1m downward to 89.1m; 4A4 at 81.2-81.6m & 86.0-89.4m; gouge from 60.0-60.1m; 72.3-75.3m, 78.4-80.9m;
L	894	1110 3	9	5 D 10	minor py blebs, lesser po; chlorite assoc. w/ qtz lenses; massive or slightly banded above 94.7m; more banding below 94.7m; calcite in fractures & also assoc. w/ qtz; interlayers of 5B8; few qtz veins; 5B8 from 94.7-95.7m, 107.6-110.3m.
		EOH			

DDH 76-A164 (2 / 8)

Cyprus Anvil Mining Corp.
Structural Log

Logged By: PN

Code	From	To	Feature	Sym	S_1 Dip Direct.	S_2 Dip Direct.	Description
	10 14	16 20	22 24	26	28 32	34 38	
B							O/B 0.0 – 7.3m.
S		10.2	CS12			617 2310	
S		15.1	CS12			615 2310	
S		21.3	CS12			616 2310	
S		27.4	CS12			613 2310	
S		31.2	F12	E			Z sym. 31.2 – 36.6m.
S		33.1	CS12			615 2310	
S		36.6	F12	Z			M region 36.6 – 37.8m.
							Z/S = 50/50
S		37.8	F12	M			S sym 37.8 – 38.9m
S		38.9	CS12			414 2310	
S		38.9	F12	E			Z sym. 38.9 – 42.2m.; min.
							S sym. at 39.5m
S		42.2	F12	3			S sym. 42.2 – 50.3m; min.
							H region at 48.9m.
S		46.3	CS12			72 2310	
S		50.3	F12	E			Z sym. 50.3 – 56.0m.
S		51.6	CS12			719 2310	
S		56.0	F12	3			S sym. 56.0 – 110.3m; F4 at 90.9m,
							91.8m; D at 97.0m; min. Z sym at
							68.2m.
S		58.1	C612			517 2310	
S		65.7	CS12			710 2310	
S		70.6	CS12			710 2310	
S		71.1	CS12			717 2310	
S		83.3	CS12			710 2310	
S		90.7	CS12			518 2310	
S		96.8	CS12			615 2310	
S		101.0	CS12			711 2310	
S		101.9	CS12			710 2310	
		EOH					

DDH 76-A164

Cyprus Anvil Mining Corp.

Geochemical Log (Sampler's Copy)

Logged By: PN

Sampled By:

Code	From	To	Sample No.	Description		
1	10 14	16 20	22 27	LENGTH	REC.	UNIT
P	8132	8149	51/141	1.7	1.5	5AD
P	8149	8164	51/142	1.5	0.7	5AD
P	8164	8179	51/143	1.5	0.8	4AD
P	8179	8194	51/144	1.5	0.4	4AD

DDH FAGA164 Cyprus Anvil Mining Corp. Page _____ of _____

2 meters 8 Structural Log Date: _____ Logged By: DSJ

Code	From	To	Feature	Sym	S_0 Dip Direct.	S_1 Dip Direct.	S_2 Dip Direct	Description
1	10 14	16 20	22 24	26	28 32	34 38	40 44	
E	7.3	9.9	BR					broken & rubbly
F	9.9	11.7	BR					" " "
F	12.2	19.0	BRP	2				" " " < 2m recd. no gouge
F	20.4	27.4	BR					" " " thwart
F	27.4	31.1	G					gouge no atts poss.
F	31.1	31.9	P	5				0.4m recd.
F	31.2	31.7	P	3				0.2m "
F	45.4	45.6	G		72 000		72 000	gouge $\perp S_2$
F	72.2	81.0	GRF	3				gouge & rubble; ± 2m recd. no atts.

C.A.M.C. 1981 - E - 4

DIAMOND DRILL RECORD

LOGGED BY F. Chow

D.D.H. № 76 - A164 PAGE 1 of 5

PROPERTY GRUM JOINT VENTURE, Y.T.

	CO-ORDS	GRID		
LATITUDE	11,141.542	14N	STARTED	Sept. 26/76 D.S.
DEPARTURE	9,684.463	80W	COMPLETED	Sept. 29/76 N.S.
ELEVATION	1289.220	Surface	PROPOSED DEPTH	105m
			ULTIMATE DEPTH	110.3m

HOLE SURVEY:

DEPTH	BEARING	DIP
Collar	/	-90
/	/	/

CLAIM №

N

DIRECTION AND DISTANCE FROM N.E. CLAIM POST

1218.77

Interval From	Interval To	DESCRIPTION	Recovery	Sample №	Interval From	Interval To	Sample Length	Assay Pb	Assay Zn	Assay Ag	Assay Au	Assay Cu	Assay x Pb	Assay x Zn	Assay x Ag
0	7.3	OVERBURDEN. Triconed to 7.3m.	Nil / 7.3		0	7.3									
7.3	27.4	QTZ-SER-CALC PHY (SK) Light to Med. Gray.													
		55-60% qtz, 1-5% calc, locally slightly chloritic.	4.8 / 20.1		7.3	27.4									
		Talc-chl phyllite @ 19.4-20.4m.													
		Minor rusty oxidation in fractures @ 8.8-10m and @ 12.5m.													
		Recovery very poor, core as chips + fragments. Note													
		gouge @ 23.5m + crushed phy. @ 25.6-25.9m. Rocks moderately													
		fractured + probably more sheared than core indicate.													
		C.A. F_2 = 75° @ 8.1m (F_1 = 30° to F_2), 70° @ 10.6m (F = 90° to F_2),													
		50° @ 12m, 80° @ 13m (F_1 = 60° to F_2), 70° @ 15m (F_1 = 45 -													
		90° to F_2), 60° @ 19.3, 45° @ 24.2m, 70° @ 25.9m.													
27.4	31.3	FAULT													
		Light gray, fine breccia w/gouge + muddy gouge	0.52 / 1.7		27.3	29.0									
		29-29.6m: gouge, breccia + phy chips recovered (0.07m)	0.07 / 0.6			29.6									
		29.6-31.1: no core.	N.C. 0.1 / 0.2			31.1 31.3									

LOGGED BY J. Chow D.D.H. Nº 76-A164 PAGE 2 of 5

Interval From	Interval To	DESCRIPTION	Recovery	Sample Nº	Interval From	Interval To	Sample Length	Assay Pb	Assay Zn	Assay Ag	Assay Au	Assay Cu	Assay x Pb	Assay x Zn	Assay x Ag
31.3	34.1	Qtz-Ser Phy (Sb) Pale Gray.													
		Siliceous + hard from 31.9 - 32.3' and from 32.6 -	1.2/2.8		31.3	34.1									
		34.1. The other sections are fissile med. gray ser. phy.													
		C.A. F_2 = 65°. F_1 = 60-90° to F_2 @ 32.1'.													
34.1	38.3	Qtz-Ser-Graph Phy (Sa) Med. Gray													
		55% gf3, 3-5 graph. Thinly laminated, fissile. Note	1.9/3.1		34.1	37.2									
		shearing or crushing // F_2, 1-2 per meter of core.	1.0/1.1			38.3									
		C.A. F_2 = 60° @ 34.1-37', 50° @ 37.2-38', 40° @ 38.2-39.2'.													
		F_1 = sub-v. to F_2 @ 34.1-38', fair to good forms.													
38.3	42.0	Qtz-Ser-Graph-Calc Phy (Sak) Med. Gray													
		As 34.1-38.3' w/ addition of 1-3% calc.	2.5/3.7		38.3	42.0									
		C.A. F_2 = 40°. F_1 = sub-v. to F_2, fair.													
42.0	56.0	Qtz-Ser-Calc Phy (Sk) Light + Med. Gray.													
		55% gf3, 1-3 calc v, n, seritic, parts of light gray phyllite is massive.	2.9/4.3		42.0	46.3									
		Generally, the rocks are fissile and the core is recovered	6.1/7.3			53.6									
		as poker chips.	2.3/2.4			56.0									
		Med. gray phyllite occurs @ 46.4-46.8', 48.9-49.2, 50.3-51.6													
		C.A. F_2 = 60° @ 42', 80° @ 43.2, 70° @ 44.5, 75° @ 46.2 & 47.5,													

LOGGED BY F. Chow D.D.H. Nº 76-A164 PAGE 3 of 5

Interval From	Interval To	DESCRIPTION	Recovery	Sample Nº	Interval From	Interval To	Sample Length	Assay Pb	Assay Zn	Assay Ag	Assay Au	Assay Cu	Assay x Pb	Assay x Zn	Assay x Ag
		80° @ 48m - 55.1m, 75° @ 55.3 - 56m.													
		F1 = sub-v. to F2 @ 4.2m, 48.3, 49.3 - 49.7, 50.4 - 55m.													
		Shearing @ 42, 42.5 - 43, 43.8, 44.7 - 44.9 (FAULT),													
		45.9 - 46, 1 or more per meter from 47.8 to 50.3m.													
56.0	60.0	QTZ - SER PHY (Sb) Bleached Pale Gray w/Buff.													
		65% qtz, siliceous & hard but parts readily. 15%	3.7/4.0		56.0	60.0									
		qtz veining @ 58.3 - 60m. Graph Phy @ 59.3 - 59.7m.													
		Spots of PZ @ 56.6 & 58.3m.													
		C.A. F2 = 70-60°. F1 = 60° to F2 @ 56.7m.													
60.0	72.2	QTZ - GRAPH - SULPHS PHY (GP) Jet Black													
		55-60% qtz, 1-3% py, spots of PZ @ 63.1,	0.35/0.6		60.0	61.6									
		72m. Highly graphitic but partly siliceous & hard, yet	3/3.0			64.6									
		parts readily. Gray-buff ser. phy @ 64.1 - 64.9m.	1.1/1.5			66.1									
		Upper contact sheared.	0.4/1.6			67.7									
			1.05/1.2			68.9									
		C.A. F2 = 75-80° @ 60 - 65.5m, 70° @ 65.7, 90° @ 68,	0.45/1.2			70.1									
		70° @ 69.1 - 72	2/2.1			72.2									
		F1 = sub-v. to F2, locally fair.													

LOGGED BY J. Chow D.D.H. Nº 76-A164 PAGE 4 of 5

Interval From	Interval To	DESCRIPTION	Recovery	Sample Nº	Interval From	Interval To	Sample Length	Assay Fb	Assay Zn	Assay Ag	Assay Au	Assay Cu	Assay x Pb	Assay x Zn	Assay x Ag
72.2	80.5(?)	FAULT & SHEAR ZONE in Qtz-Graph Phy.													
		Black graphitic gouge, breccia & sheared or crushed phyllite	0.35/3.1		72.2	75.3									
		cored @ 72.2 - 75.3 and from 78.3 - 80.5(?). Between 75.3 -	0.4/3.0			78.3									
		78.3' core recovered = 0.4'/3.0' of graphitic phy, suggests	0.73/1.6			79.9									
		gouge & sheared rock may have been washed away while drilling.	0.1/0.6			80.5									
		One spot of PZ noted @ 77.7'.													
80.5(?)	89.4	QTZ-GRAPH-SULPHS (GP) Jet Black	Py	PZ											
		As 60-72.2' graph. phy. < 0.5% py, 0.2-4% PZ.	0.1	0.1	0.2/0.7		80.5	81.2	1.3	0.1	Est.				
		80.5(?) - 81.2': 0.1 py, 0.1 PZ.	5	7	0.25/0.25			81.45		7.0	Est.				
		- 81.45: 5 py, 7 PZ	0.4	0.2	1.63/1.95			83.4		0.2	Est.				
		- 81.7: bleached ser, barren.	0.5	0.8	1.3	A 750B		84.9	1.5	0.70	1.33	14.77		2.03	Pl. Zn
		- 82.3: 0.1 py, 0.1 PZ	1	4	1.5	751B		87.9	3.0	1.35	3.43	26.40		2.78	"
		- 83.4: 0.5 py, 0.3 PZ.	0.5	2.5	0.47	752B		89.4	1.5	0.43	2.50	13.03		3.43	"
		Lower contact approx. // Fr of 75°, sharp. F1+F2 mineralizn.													
		C.A. F2 = 60° @ 81' to 82, 85° @ 82.4, 70° @ 82.7,				WT. An.	83.4	89.4	6.0	3.76	Pl Zn			22.54	"
		85° @ 84, 70° @ 84.5 - 88, 80° @ 88.8',													
		70° @ 89'													
		F1 = sub-V. to F2, locally good.													
89.4	93.6	QTZ-SER-CALC PHY Pale Gray.													
		70% qtz, 1% calc. occuring intermittently and generally	0.95/1.1		89.4	90.5									

LOGGED BY _____ D.D.H. Nº 76-A164 PAGE 5 of 5

Interval From	Interval To	DESCRIPTION	Recovery	Sample Nº	Interval From	Interval To	Sample Length	Assay Pb	Assay Zn	Assay Ag	Assay Au	Assay Cu	Assay x Pb	Assay x Zn	Assay x Ag
		in quartzose layers and in fractures. Rock massive, little or no banding. 90.1 - 91': Grey, banded Ser. Phy. C.A. F_2=70° @ 89.5, 65° @ 89.8, 55° @ 91, 50° @ 92, 45° @ 92.5 to 93.9'. F_1 = 90° to F_2 @ 90.3', 70° to F_2 @ 91.2, 35° @ 93.2'.	3/3.1		90.5	93.6									
93.6	110.3	QTZ-Ser-Calc Phy (Sk) Med. Grey. 60-65% qtz, 1-4% calc - intermittent occurrence, usually in qtz ore bands & fractures. Phyllites are a mixture of banded and not banded rocks. A few bands of chloritic phyllite @ 96.4 - 99.8'. 94 - 95.1': Numerous shears.	6.9/7.6		93.6	101.2									
			4/4.3			105.5									
			3.5/4.8			110.3									
		C.A. F_1 = sub-v. to F_2, local, fair. C.A. F_2 = 60° @ 94-101, 75-85° @ 101.2, 75° @ 101.5 - 106', 70-65° @ 106.5 - 110'.													
	110.3	END OF HOLE.													
		REMARKS: ① Ground weak to 34', coring difficult. ② Cemented with bags cement.													

DDH: FAGA164 -- 42 DEGREE PROFILE

(VIEW AZIMUTH = 312 DEGREES)

ELEV:1302 592368E ; 905350N

PLUNGE ANGLE IS 11.0 TREND ANGLE IS 312.0

CORRECTED COLLAR POSITION: X = 806.3 Z = 1303.9

SECTION NAME: 80W

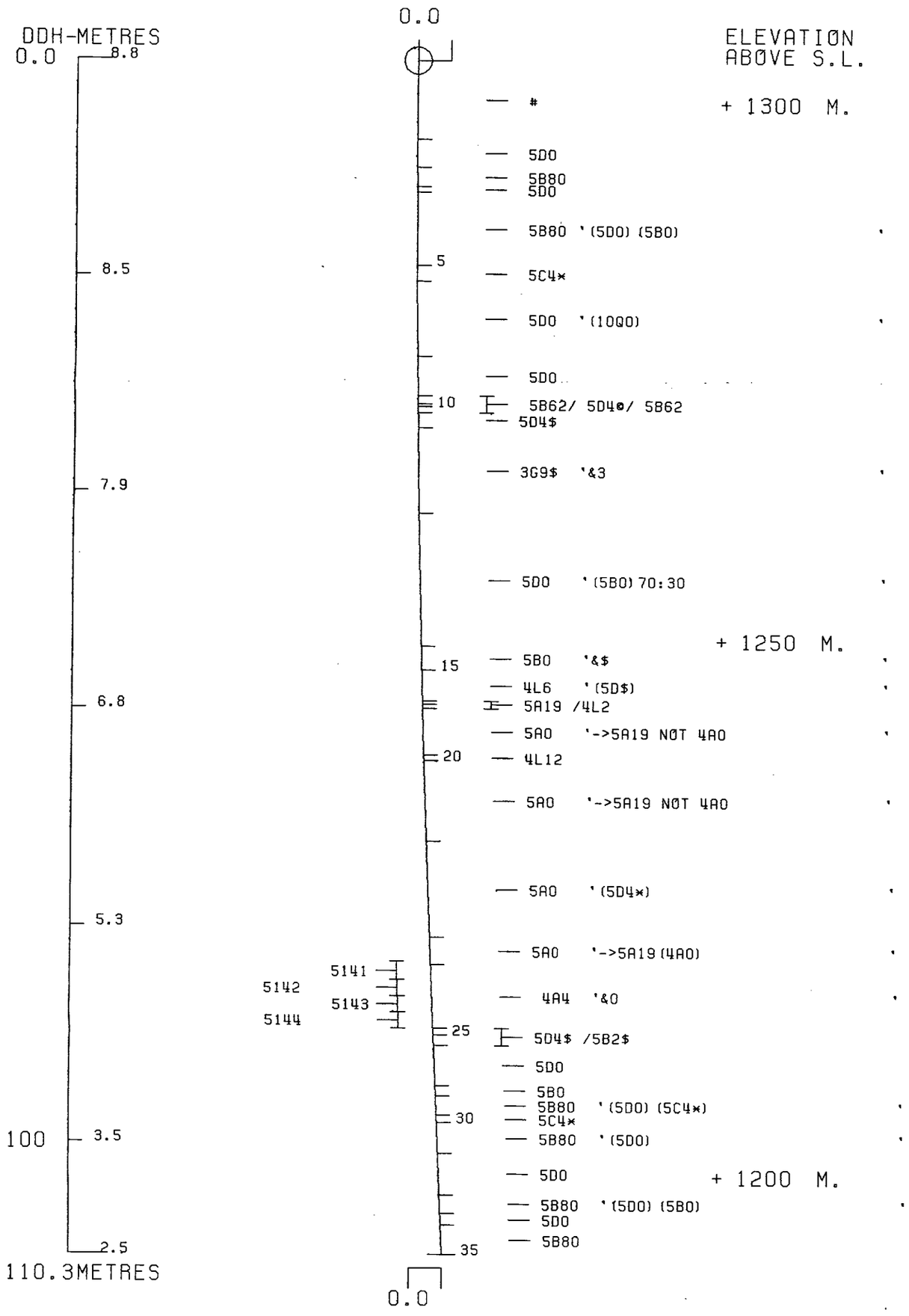

CYPRUS ANVIL MINING CORPORATION
PROGRAM DH162 29 JAN 1985 9:45 AM

DDH: FAGA164 -- 42 DEGREE PROFILE

(VIEW AZIMUTH = 312 DEGREES)

ELEV: 1302 592368E ; 905350N

PLUNGE ANGLE IS 11.0 TREND ANGLE IS 312.0

CORRECTED COLLAR POSITION: X = 806.3 Z = 1303.9

SECTION NAME: 80W

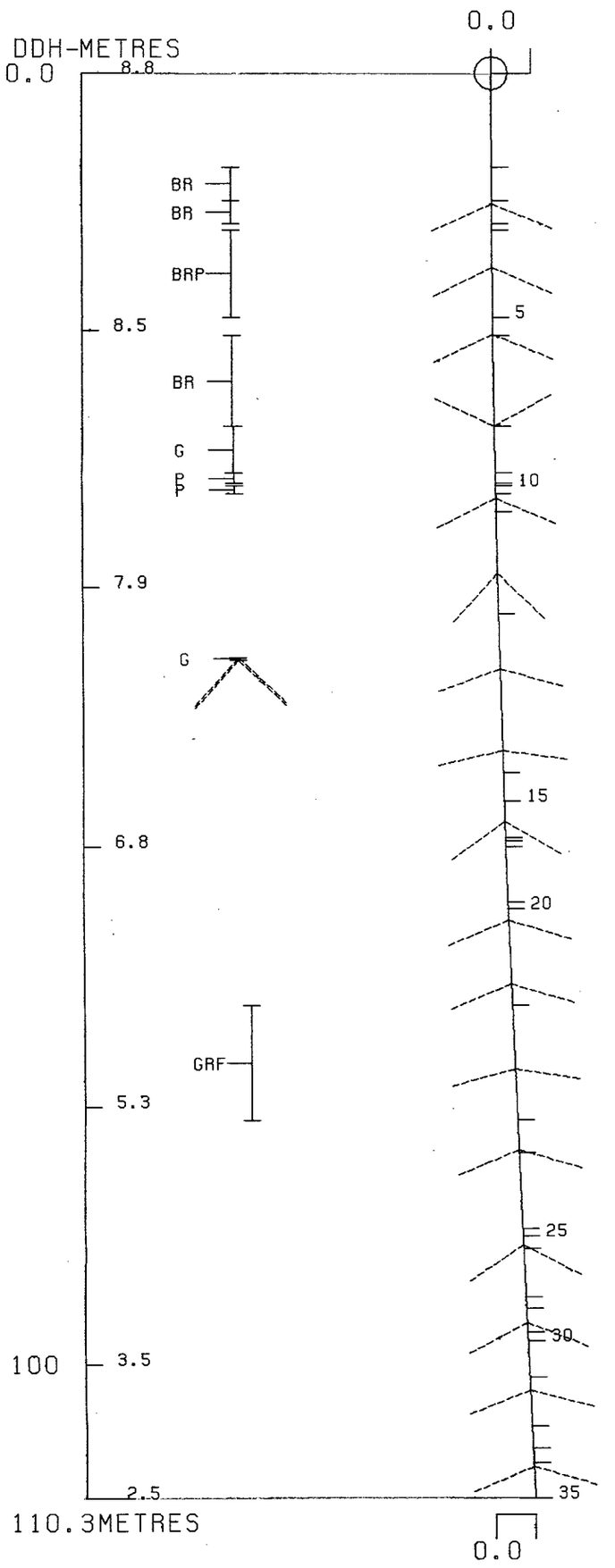

ELEVATION ABOVE S.L.

+ 1300 M.

+ 1250 M.

+ 1200 M.

CYPRUS ANVIL MINING CORPORATION
PROGRAM DH161 29 JAN 1985 12:57 PM

FAGA214

DRILL HOLE : FAGA214

NORTHING : 905,321.7

EASTING : 592,344.8

ELEVATION : 1,302.0

TOTAL DEPTH : 492.8

SECTION : W 80

R.F.E. :

RFE DIRECTION: 230

PLUNGE ANGLE : 11

PLUNGE DIRECT: 312

DHD CALC: 1

SS CALC: 0

DETAIL RECORD COUNTS:

NOS ORE-SAMPLES: 34

NOS DOWN-H-SURVEYS: 9

NOS DOWN-H-LITHOLOGY: 156

NOS DOWN-H-STRUCTURE: 111

NOS DOWN-H-FAULTS: 56

NOS DOWN-H-SPLINES: 9

NOS COMPOSITES: 0

DDH: FAGA214 UTM-N: 905,321.7 UTM-E: 592,344.8 UTM-ELEV: 1,302.0 TOTAL DEPTH: 492.8 SECTION: W 80
RFE: RFE DIR: 230 PLUNGE ANGLES: 11 312 DHD CALC: 1 SS CALC: 0

DEPTHS FROM	DEPTHS TO	SAMPLE NO.	INT.	REC.	ROCK UNIT	S.G. PULP	ASSAYS CU %	PB %	ZN %	AG(AA) G/MT	AG(FA) G/MT	AU(FA) G/MT	PO %	PY %	TOT FE	BAO %	HG %	MN %	AS %	BA %	S.G. W.R.
53.0	55.8	11558	2.8	.7	4A4*	3.23	.03	2.70	3.50	44.00	46.00	.34	4	6	10						
67.7	68.3	11559	.6	.5	4AE	3.55	.02	3.90	6.30	69.00		.48	2	5	8						
68.3	69.1	11560	.8	.7	5D*	3.20	.05	2.90	3.30	59.00		1.44	5	1	6						
69.1	69.5	11561	.4	.4	4D4	3.23	.03	4.00	7.70	62.00		1.17	2	2	5						
70.8	71.5	11562	.7	.7	4C0	3.56	.07	1.61	2.50	29.00		.89	2	15	18						
71.8	72.2	11563	.4	.4	4CA	3.09	.09	1.56	1.90	23.00		.69	1	3	5						
74.2	74.7	11564	.5	.5	4D4	3.41	.09	5.70	4.70	62.00		.62	1	7	9						
75.9	76.2	11565	.3	.3	4E4	4.78	.08	11.10	20.20	200.00		1.30	3	15	19						
76.2	76.6	11566	.4	.3	4A0	3.41	.01	.83	1.75	18.00		.48	1	9	10						
76.6	77.0	11567	.4	.3	4E4	4.63	.02	7.30	14.40	135.00	130.00	1.30	1	27	28						
77.0	78.0	11568	1.0	1.0	4A4	3.51	.02	3.00	6.40	56.00		.55	1	9	11						
78.0	79.5	11569	1.5	1.5	4E4*	3.89	.02	5.90	13.70	115.00		.82	2	13	15						
79.5	80.9	11570	1.4	1.4	4E4*	3.99	.08	8.50	15.70	153.00		1.03	2	13	15						
80.9	81.4	11571	.5	.5	4A0	2.99	.02	.22	.38	4.00		.14	1	2	4						
81.4	82.5	11572	1.1	1.1	4E4	4.05	.04	5.50	14.30	111.00		.69	6	15	22						
82.5	84.5	11573	2.0	2.0	4D4	3.18	.02	4.30	11.50	82.00		.21	3	2	5						
84.5	86.5	11574	2.0	2.0	4D4	3.17	.03	3.00	9.40	58.00		.27	3	2	5						
86.5	88.0	11575	1.5	1.5	4D4	3.31	.02	5.20	11.60	104.00		.34	2	2	4						
93.0	93.4	11576	.4	.4	4A41	3.38	.02	2.90	7.70	55.00		.34	2	7	9						
93.4	94.1	11577	.7	.7	4A0	3.04	.01	.11	.30	3.00		.07	1	3	4						
94.1	94.7	11578	.6	.6	4E4	4.47	.01	1.65	6.70	22.00	26.00	.82	1	34	35						
94.7	95.4	11579	.7	.7	4A14	3.20	.01	3.90	11.70	63.00		.27	1	1	3						
95.4	96.8	11580	1.4	1.4	4A0	2.96	.01	.08	.17	3.00		.07	2	1	3						
98.6	100.6	11581	2.0	2.0	4A0	2.96	.01	.71	1.46	16.00		.07	2	1	3						
100.6	102.1	11582	1.5	.9	4A0	2.98	.01	1.12	3.30	22.00		.14	1	1	2						
180.5	182.8	11583	2.0	2.0	5A19		.01	.03	.08	3.00											
182.8	184.8	11584	2.0	2.0	5A19		.01	.05	.09	3.00											
184.8	186.8	11585	2.0	1.8	5A19		.01	.05	.11	3.00											
186.8	188.9	11586	2.1	1.7	5A19		.01	.02	.04	1.00											
291.1	293.7	11776	2.6	2.6	4GE4	4.46	.25	9.60	12.40	150.00		2.61	1	20	21						
293.7	295.9	11777	2.2	2.2	4DC	2.98	.04	1.23	2.50	25.00		.55	3	4	7						
295.9	297.3	11778	1.4	1.4	4L14	2.88	.02	.60	.74	6.00		.48	2	1	3						
321.2	325.5	11779	4.3	1.6	4E4	3.48	.03	2.10	3.20	40.00		.69	1	15	17						
325.5	327.2	11780	1.7	1.7	4A4	3.31	.07	2.20	3.90	44.00		1.10	2	13	15						
WEIGHTED AVERAGE																					
53.0	55.8		2.8	.7		3.23	.03	2.70	3.50	44.00	46.00	.34	4	6	10						
67.7	69.5		1.8	1.6		3.32	.03	3.47	5.27	63.00		1.06	3	3	7						
70.8	71.5		.7	.7		3.56	.07	1.61	2.50	29.00		.89	2	15	18						
71.8	72.2		.4	.4		3.09	.09	1.56	1.90	23.00		.69	1	3	5						

DDH: FAGA214 UTM-N: 905,321.7 UTM-E: 592,344.8 UTM-ELEV: 1,302.0 TOTAL DEPTH: 492.8 SECTION: W 80
RFE: RFE DIR: 230 PLUNGE ANGLES: 11 312 DHD CALC: 1 SS CALC: 0

DEPTHS FROM	DEPTHS TO	SAMPLE NO.	INT.	REC.	ROCK UNIT	ASSAYS S.G. PULP	CU %	PB %	ZN %	AG(AA) G/MT	AG(FA) G/MT	AU(FA) G/MT	PO %	PY %	TOT FE	BAO %	HG %	MN %	AS %	BA %	S.G. W.R.
74.2	74.7		.5	.5		3.41	.09	5.70	4.70	62.00		.62	1	7	9						
75.9	88.0		12.1	11.9		3.56	.03	4.86	11.28	92.89	4.29	.54	2	8	11						
93.0	96.8		3.8	3.8		3.30	.01	1.33	4.14	22.52	4.10	.25	1	7	9						
98.6	102.1		3.5	2.9		2.96	.01	.88	2.24	18.57		.10	1	1	2						
180.3	188.9		8.1	7.5			.01	.03	.07	2.43											
291.1	297.3		6.2	6.2		3.57	.12	4.59	6.25	73.12		1.39	2	10	12						
321.2	327.2		6.0	3.3		3.43	.04	2.12	3.39	41.13		.30	2	15	17						

DDH: FAGA214 UTM-N: 905,321.7 UTM-E: 592,344.8 UTM-ELEV: 1,302.0 TOTAL DEPTH: 492.8 SECTION: W 80
RFE: RFE DIR: 230 PLUNGE ANGLES: 11 312 DHD CALC: 1 SS CALC: 0

DEPTH	ZENITH	AZIMUTH
0.000	180.000	0.000
69.500	176.000	203.000
120.400	171.000	111.000
181.400	168.500	117.000
242.300	165.000	110.500
303.300	163.000	124.000
364.200	162.000	119.000
425.200	161.000	110.000
486.200	160.000	111.000

DDH: FAGA214 UTM-N: 905,321.7 UTM-E: 592,344.8 UTM-ELEV: 1,302.0 TOTAL DEPTH: 492.8 SECTION: W 80
RFE: RFE DIR: 230 PLUNGE ANGLES: 11 312 DHD CALC: 1 SS CALC: 0

DEPTH	UNIT	CODE	DESC	RECOVERY	IND
15.8	0001	#		0.0	1
23.7	0002	5A6	(5A19)	0.0	1
24.5	0003	5A0	(5A19)	0.0	1
31.7	0004	4A0	->(5A319)	0.0	1
33.2	0005	5D*	(5A6)	0.0	1
37.9	0006	5A6	->5B62	0.0	1
39.7	0007	5B62	(5D*)	0.0	1
53.0	0008	5A6	89	0.0	1
55.3	0009	4A4*	(5A6)(5D*)	0.0	1
56.1	0010	5D$		0.0	1
56.7	0011	5A61		0.0	1
64.0	0012	5A4		0.0	1
67.7	0013	5A61	(4A4)(4A0)	0.0	1
68.3	0014	4A0	(4E4) AT TOP	0.0	1
69.1	0015	5D*	(4D4)	0.0	1
69.5	0016	4D4	(5C*)	0.0	1
70.8	0017	5C3		0.0	1
71.5	0018	4C0		0.0	1
71.8	0019	5D3		0.0	1
72.2	0020	4C0	(4A41) 50:50	0.0	1
74.2	0021	5C3	(4A4) MINOR	0.0	1
74.7	0022	4D4	(4A41) AT BASE	0.0	1
75.9	0023	5C*		0.0	1
76.2	0024	4E4		0.0	1
76.6	0025	4A0		0.0	1
77.0	0026	4E4	(4E0) MINOR	0.0	1
78.0	0027	4A0	(4A4) AT TOP	0.0	1
80.9	0028	4E4*	(4A0)(5A0)	0.0	1
81.4	0029	4A0		0.0	1
82.5	0030	4E4	(4E0) AT TOP (4A4)	0.0	1
88.0	0031	4D4	(4A14)	0.0	1
93.0	0032	5A19		0.0	1
93.4	0033	4A41		0.0	1
94.1	0034	4A0		0.0	1
94.7	0035	4E4		0.0	1
95.4	0036	4A14		0.0	1
96.8	0037	4A0		0.0	1
98.6	0038	5A6	3981	0.0	1
102.1	0039	4A0	(5D*)	0.0	1
111.2	0040	5B35	(5D35) 50:50	0.0	1
117.6	0041	5B33		0.0	1
119.9	0042	5C3		0.0	1
137.8	0043	5B38		0.0	1
139.2	0044	5C35		0.0	1
146.1	0045	5B3	88	0.0	1
150.9	0046	5C35		0.0	1
152.0	0047	5B38		0.0	1
157.0	0048	5C35	(5B38)(1000)	0.0	1
161.0	0049	5C35		0.0	1
166.2	0050	5B38		0.0	1
168.8	0051	5C35		0.0	1

DDH: FAGA214 UTM-N: 905,321.7 UTM-E: 592,344.8 UTM-ELEV: 1,302.0 TOTAL DEPTH: 492.8 SECTION: W 80
RFE: PFE DIR: 230 PLUNGE ANGLES: 11 312 DHD CALC: 1 SS CALC: 0

DEPTH	UNIT	CODE	DESC	RECOVERY	IND
167.6	0052	5B38	(10Q0)	0.0	1
169.7	0053	5B38		0.0	1
174.0	0054	5A68		0.0	1
177.7	0055	5A33	(10Q0)	0.0	1
180.8	0056	5A3	&1&9	0.0	1
188.9	0057	5A19	(4A0)(5A3) 60:40:MINOR	0.0	1
196.3	0058	5A3	&9 (5D3)(10Q0)	0.0	1
196.3	0059	5A6	(10Q0)	0.0	1
199.0	0060	5C35	BIOTITE	0.0	1
202.8	0061	5B6		0.0	1
204.1	0062	5C35	BIOTITE	0.0	1
205.1	0063	5B62		0.0	1
207.9	0064	5D3	(5B62)	0.0	1
210.6	0065	5A6	(5B628)(5D3)	0.0	1
222.2	0066	5B62	&8&3	0.0	1
223.5	0067	5A6		0.0	1
224.6	0068	5B62		0.0	1
228.6	0069	5B62	(10Q0) 80:20	0.0	1
238.1	0070	5B62		0.0	1
238.4	0071	5C35	[5D5] MAYBE REALLY [3B3]	0.0	1
245.8	0072	5B62	(10Q0)	0.0	1
246.5	0073	5B62	(5D3)	0.0	1
259.3	0074	5B62	(10Q0) 90:10	0.0	1
262.7	0075	5A6	(5B62) 50:50	0.0	1
264.1	0076	5B62		0.0	1
264.5	0077	5D3	(5B62) 60:40	0.0	1
266.3	0078	5B62	(5A0)	0.0	1
269.7	0079	5A6	(5D3) 80:20	0.0	1
273.7	0080	5B62	(10Q0)	0.0	1
284.7	0081	5B6	&2&8	0.0	1
287.1	0082	5A6		0.0	1
288.8	0083	5B6	&4	0.0	1
290.1	0084	4L0		0.0	1
291.1	0085	4L1	(10Q0)	0.0	1
292.0	0086	4G4	(4E4#)	0.0	1
293.7	0087	4E4#		0.0	1
294.6	0088	4D0	(4D4) AT TOP (5D4*) AT TOP	0.0	1
295.0	0089	5D4a		0.0	1
295.9	0090	4C0	->4L4	0.0	1
297.3	0091	4L14		0.0	1
302.7	0092	5B61	&9	0.0	1
304.4	0093	5B4	(4L0)	0.0	1
307.9	0094	5B6	&4&1 (4L2) AT TOP	0.0	1
309.7	0095	4L2		0.0	1
310.9	0096	5B62		0.0	1
316.1	0097	4L0	(5B6 &8)	0.0	1
319.8	0098	5B6	&2&8 (10Q0) 80:20	0.0	1
321.2	0099	4L0	->(5B4)	0.0	1
325.5	0100	4E4	(4E0)(4L0)	0.0	1
326.6	0101	4A43		0.0	1
327.2	0102	4A4		0.0	1

DDH: FAGA214 UTM-N: 905,321.7 UTM-E: 592,344.8 UTM-ELEV: 1,302.0 TOTAL DEPTH: 492.8 SECTION: W 80
RFE: RFE DIR: 230 PLUNGE ANGLES: 11 312 DHD CALC: 1 SS CALC: 0

DEPTH	UNIT	CODE	DESC	RECOVERY	IND
328.4	0103	5A6		0.0	1
331.1	0104	5B61		0.0	1
331.9	0105	5A19	->4A00	0.0	1
335.9	0106	4LC		0.0	1
336.3	0107	5B26	->4A0	0.0	1
339.5	0108	4LC		0.0	1
349.4	0109	5B6	[3G0]	0.0	1
351.0	0110	4L2	(5B64)	0.0	1
354.9	0111	5B6	(5B62)	0.0	1
356.6	0112	5B64	[3G4]	0.0	1
362.0	0113	4LC	&2&7&$	0.0	1
371.9	0114	5B64	BIO.[3D8] START BIO IN PELITES	0.0	1
374.2	0115	4L21	BIOTITE	0.0	1
382.2	0116	5B68	[3G8] [3D8]	0.0	1
390.8	0117	5B38	[5B0 BIOTITE][3D86]	0.0	1
394.4	0118	5B6	BIOTITE [3G0]	0.0	1
402.2	0119	5B68	[3G8]	0.0	1
406.3	0120	5B62		0.0	1
407.0	0121	5B68		0.0	1
409.2	0122	5A6	(5D3) MINOR	0.0	1
409.6	0123	100		0.0	1
411.0	0124	5A6		0.0	1
412.7	0125	5A6		0.0	1
413.5	0126	5A3	(5A38)	0.0	1
414.2	0127	5B6	BIOTITE	0.0	1
416.4	0128	5C6	[5D6]	0.0	1
417.3	0129	5B68	3 BIOTITE [5B68 &3]	0.0	1
420.2	0130	5C6	[5D6]	0.0	1
420.8	0131	5B26	(4L0)	0.0	1
421.3	0132	5C6	[5D6]	0.0	1
422.7	0133	5A6	(5B26)	0.0	1
424.3	0134	5C6	[5D6]IGN.TEXT OR C.G.MET.TEXT?	0.0	1
425.6	0135	5A3	(5D6) AT TOP	0.0	1
426.0	0136	5A6		0.0	1
431.1	0137	5C6	[5D6] &*	0.0	1
435.1	0138	5A6		0.0	1
435.2	0139	4LC	[1D4]	0.0	1
437.8	0140	4LC	[1D4] STAUR. ANDUL.	0.0	1
440.9	0141	5C6*	BIOTITE	0.0	1
442.9	0142	100	STAUR.	0.0	1
444.0	0143	5C6	[5D6]	0.0	1
444.5	0144	100		0.0	1
445.2	0145	100	(1D0)	0.0	1
456.4	0146	100	GAR.,AND.,STAUR.	0.0	1
460.5	0147	130	[3F0]	0.0	1
461.5	0148	100	(10A0)	0.0	1
463.5	0149	1087	KSP MEGACRYSTS,BIO.	0.0	1
465.7	0150	1087		0.0	1
466.8	0151	100		0.0	1
467.7	0152	1005	MUSC PEGMATITE	0.0	1
471.9	0153	100		0.0	1

DDH: FAGA214 UTM-N: 905,321.7 UTM-E: 592,344.8 UTM-ELEV: 1,302.0 TOTAL DEPTH: 492.8 SECTION: W 80
RFE: RFE DIR: 230 PLUNGE ANGLES: 11 312 DHD CALC: 1 SS CALC: 0

DEPTH	UNIT	CODE	DESC	RECOVERY	IND
476.3	0154	100		0.0	1
487.3	0155	100		0.0	1
492.8	0156	1087	KSP MEGACRYSTIC	0.0	1

DDH: FAGA214 UTM-N: 905,321.7 UTM-E: 592,344.8 UTM-ELEV: 1,302.0 TOTAL DEPTH: 492.8 SECTION: W 80
RFE: RFE DIR: 230 PLUNGE ANGLES: 11 312 DHD CALC: 1 SS CALC: 0

DDH	F DEPTH	T DEPTH	FEAT	SYMTRY	S0 ANGLE	S0 DIRECT	S1 ANGLE	S1 DIRECT	S2 ANGLE	S2 DIRECT	RFE CDE	DHDC	SDC	PROCESS
FAGA214	0.0	17.3	CS2	3	0	0	0	0	65	230	C	1	0	1
FAGA214	0.0	18.2	CS2	E	0	0	0	0	65	230	C	1	0	1
FAGA214	0.0	24.2	CS2	Z	0	0	0	0	60	230	C	1	0	1
FAGA214	0.0	26.0	CS2	3	0	0	0	0	60	230	C	1	0	1
FAGA214	0.0	31.7	CS2	Z	0	0	0	0	60	230	C	1	0	1
FAGA214	0.0	32.8	CS2	E	0	0	0	0	60	230	C	1	0	1
FAGA214	0.0	33.8	CS2	S	0	0	0	0	65	230	C	1	0	1
FAGA214	0.0	35.3	CS2	E	0	0	0	0	60	230	C	1	0	1
FAGA214	0.0	37.2	CS2	3	0	0	0	0	55	230	C	1	0	1
FAGA214	0.0	39.8	CS2	3	0	0	0	0	60	230	C	1	0	1
FAGA214	0.0	44.2	CS2	Z	0	0	0	0	70	230	C	1	0	1
FAGA214	0.0	46.1	PS2	P	0	0	0	0	20	230	C	1	0	1
FAGA214	0.0	49.7	PS2	P	0	0	0	0	30	230	C	1	0	1
FAGA214	0.0	51.8	CS2	Z	0	0	0	0	50	230	C	1	0	1
FAGA214	0.0	56.1	PS2	P	0	0	0	0	20	230	C	1	0	1
FAGA214	0.0	68.5	PS2	P	0	0	0	0	65	230	C	1	0	1
FAGA214	0.0	69.7	PS2	P	0	0	0	0	70	230	C	1	0	1
FAGA214	0.0	72.2	PS2	P	0	0	0	0	60	230	C	1	0	1
FAGA214	0.0	73.6	CS2	Z	0	0	0	0	60	230	C	1	0	1
FAGA214	0.0	77.4	CS2	Z	0	0	0	0	65	230	C	1	0	1
FAGA214	0.0	80.3	CS2	3	0	0	0	0	55	230	C	1	0	1
FAGA214	0.0	81.0	CS2	M	0	0	0	0	75	230	C	1	0	1
FAGA214	0.0	82.4	CS2	E	0	0	0	0	60	230	C	1	0	1
FAGA214	0.0	89.3	CS2	Z	0	0	0	0	70	230	C	1	0	1
FAGA214	0.0	90.8	CS2	Z	0	0	0	0	70	230	C	1	0	1
FAGA214	0.0	91.8	CS2	Z	0	0	0	0	70	230	C	1	0	1
FAGA214	0.0	93.7	CS2	S	0	0	0	0	70	230	C	1	0	1
FAGA214	0.0	95.6	CS2	S	0	0	0	0	70	230	C	1	0	1
FAGA214	0.0	96.5	CS2	D	0	0	0	0	75	230	C	1	0	1
FAGA214	0.0	99.8	CS2	3	0	0	0	0	60	230	C	1	0	1
FAGA214	0.0	103.0	PS2	P	0	0	0	0	50	230	C	1	0	1
FAGA214	0.0	105.7	PS2	P	0	0	0	0	65	230	C	1	0	1
FAGA214	0.0	107.1	PS2	P	0	0	0	0	70	230	C	1	0	1
FAGA214	0.0	110.3	CS2	3	0	0	0	0	70	230	C	1	0	1
FAGA214	0.0	112.0	CS2	M	0	0	0	0	60	230	C	1	0	1
FAGA214	0.0	113.9	CS2	S	0	0	0	0	60	230	C	1	0	1
FAGA214	0.0	115.4	CS2	S	0	0	0	0	60	230	C	1	0	1
FAGA214	0.0	117.5	CS2	S	0	0	0	0	60	230	C	1	0	1
FAGA214	0.0	120.0	PS2	P	50	270	0	0	70	230	C	1	0	1
FAGA214	0.0	127.2	PS2	P	0	0	0	0	70	230	C	1	0	1
FAGA214	0.0	133.0	PS2	P	0	0	0	0	70	230	C	1	0	1
FAGA214	0.0	135.6	CS2	M	0	0	0	0	80	230	C	1	0	1
FAGA214	0.0	136.5	CS2	S	0	0	0	0	75	230	C	1	0	1
FAGA214	0.0	140.1	CS2	3	0	0	0	0	80	230	C	1	0	1
FAGA214	0.0	142.5	CS2	3	0	0	0	0	80	230	C	1	0	1
FAGA214	0.0	145.8	CS2	S	0	0	0	0	65	230	C	1	0	1
FAGA214	0.0	148.4	CS2	3	0	0	0	0	65	230	C	1	0	1
FAGA214	0.0	151.2	CS2	3	0	0	0	0	70	230	C	1	0	1
FAGA214	0.0	154.0	PS2	P	0	0	0	0	70	230	C	1	0	1
FAGA214	0.0	157.2	PS2	P	0	0	0	0	70	230	C	1	0	1
FAGA214	0.0	160.2	PS2	P	0	0	0	0	75	230	C	1	0	1

DDH: FAGA214 UTM-N: 905,321.7 UTM-E: 592,344.8 UTM-ELEV: 1,302.0 TOTAL DEPTH: 492.8 SECTION: W 80
RFE: RFE DIR: 230 PLUNGE ANGLES: 11 312 DHD CALC: 1 SS CALC: 0

DDH	F DEPTH	T DEPTH	FEAT	SYMTRY	S0 ANGLE	S0 DIRECT	S1 ANGLE	S1 DIRECT	S2 ANGLE	S2 DIRECT	RFE CDE	DHDC	SDC	PROCESS
FAGA214	0.0	162.8	PS2	P	0	0	0	0	80	230	0	1	0	1
FAGA214	0.0	163.9	CS2	E	0	0	0	0	70	230	0	1	0	1
FAGA214	0.0	166.7	CS2	M	0	0	0	0	70	230	0	1	0	1
FAGA214	0.0	171.9	CS2	3	0	0	0	0	60	230	0	1	0	1
FAGA214	0.0	174.5	CS2	S	0	0	0	0	70	230	0	1	0	1
FAGA214	0.0	176.2	CS2	S	0	0	0	0	70	230	0	1	0	1
FAGA214	0.0	179.8	CS2	S	0	0	0	0	65	230	0	1	0	1
FAGA214	0.0	181.5	CS2	Z	0	0	0	0	65	230	0	1	0	1
FAGA214	0.0	185.2	CS2	E	0	0	0	0	65	230	0	1	0	1
FAGA214	0.0	187.2	CS2	S	0	0	0	0	65	230	0	1	0	1
FAGA214	0.0	194.5	PS2	P	0	0	0	0	70	230	0	1	0	1
FAGA214	0.0	198.8	PS2	P	0	0	0	0	40	230	0	1	0	1
FAGA214	0.0	203.7	PS2	P	0	0	0	0	70	230	0	1	0	1
FAGA214	0.0	214.3	CS2	Z	0	0	65	50	75	230	0	1	0	1
FAGA214	0.0	218.5	CS2	Z	0	0	0	0	55	230	0	1	0	1
FAGA214	0.0	224.7	CS2	Z	0	0	0	0	75	230	0	1	0	1
FAGA214	0.0	229.5	CS2	Z	0	0	0	0	80	230	0	1	0	1
FAGA214	0.0	231.9	CS2	Z	0	0	0	0	80	230	0	1	0	1
FAGA214	0.0	240.5	CS2	S	0	0	0	0	85	230	0	1	0	1
FAGA214	0.0	246.0	CS2		0	0	0	0	90	230	0	1	0	1
FAGA214	0.0	251.5	CS2	Z	0	0	0	0	80	230	0	1	0	1
FAGA214	0.0	257.1	CS2		0	0	0	0	90	230	0	1	0	1
FAGA214	0.0	262.5	CS2	D	0	0	0	0	70	230	0	1	0	1
FAGA214	0.0	269.3	CS2		0	0	0	0	90	230	0	1	0	1
FAGA214	0.0	274.1	CS2	Z	0	0	0	0	75	230	0	1	0	1
FAGA214	0.0	279.5	CS2	Z	0	0	0	0	70	230	0	1	0	1
FAGA214	0.0	287.6	CS2	Z	0	0	0	0	70	230	0	1	0	1
FAGA214	0.0	292.0		P	0	0	0	0	75	230	0	1	0	1
FAGA214	0.0	298.0	CS2	S	0	0	0	0	65	230	0	1	0	1
FAGA214	0.0	300.4	CS2	Z	0	0	0	0	80	230	0	1	0	1
FAGA214	0.0	305.9	CS2	S	0	0	0	0	80	230	0	1	0	1
FAGA214	0.0	312.4	CS2	S	0	0	0	0	75	230	0	1	0	1
FAGA214	0.0	316.5	CS2	Z	0	0	0	0	75	230	0	1	0	1
FAGA214	0.0	320.0	PS2		0	0	0	0	75	230	0	1	0	1
FAGA214	0.0	327.0	CS2	Z	0	0	0	0	70	230	0	1	0	1
FAGA214	0.0	332.5	CS2	Z	0	0	0	0	60	230	0	1	0	1
FAGA214	0.0	341.2	CS2	Z	0	0	0	0	75	230	0	1	0	1
FAGA214	0.0	347.5	CS2	Z	0	0	0	0	70	230	0	1	0	1
FAGA214	0.0	351.5	CS2	D	0	0	0	0	80	230	0	1	0	1
FAGA214	0.0	358.0	PS2		0	0	0	0	75	230	0	1	0	1
FAGA214	0.0	363.6	CS2	S	0	0	0	0	60	230	0	1	0	1
FAGA214	0.0	369.3	CS2	Z	0	0	0	0	80	230	0	1	0	1
FAGA214	0.0	375.8	CS2	Z	0	0	0	0	70	230	0	1	0	1
FAGA214	0.0	381.2	PS2		0	0	0	0	65	230	0	1	0	1
FAGA214	0.0	387.7	PS2		0	0	0	0	70	230	0	1	0	1
FAGA214	0.0	394.5	PS2		0	0	0	0	80	230	0	1	0	1
FAGA214	0.0	399.3	PS2		0	0	0	0	80	230	0	1	0	1
FAGA214	0.0	403.8	PS2		0	0	0	0	75	230	0	1	0	1
FAGA214	0.0	408.6	PS2		0	0	0	0	75	230	0	1	0	1
FAGA214	0.0	415.6	PS2		0	0	0	0	75	230	0	1	0	1
FAGA214	0.0	425.5	CS2	Z	0	0	0	0	80	230	0	1	0	1

DDH: FAGA214 UTM-N: 905,321.7 UTM-E: 592,344.8 UTM-ELEV: 1,302.0 TOTAL DEPTH: 492.8 SECTION: W 80
RFE: RFE DIR: 230 PLUNGE ANGLES: 11 312 DHD CALC: 1 SS CALC: 0

DDH	F DEPTH	T DEPTH	FEAT	SYMTRY	S0 ANGLE	S0 DIRECT	S1 ANGLE	S1 DIRECT	S2 ANGLE	S2 DIRECT	RFE CDE	DHDC	SDC	PROCESS
FAGA214	0.0	431.0	PS2		0	0	0	0	65	230	0	1	0	1
FAGA214	0.0	436.5	PS2		0	0	0	0	65	230	0	1	0	1
FAGA214	0.0	443.0	PS2		0	0	0	0	50	230	0	1	0	1
FAGA214	0.0	448.9	PS2		0	0	0	0	55	230	0	1	0	1
FAGA214	0.0	452.4	PS2		0	0	0	0	80	230	0	1	0	1
FAGA214	0.0	465.5	PS2		0	0	0	0	40	230	0	1	0	1
FAGA214	0.0	472.4	PS2		0	0	0	0	35	230	0	1	0	1
FAGA214	0.0	476.4	PS2		0	0	0	0	30	230	0	1	0	1
FAGA214	0.0	486.0	CS2	M	0	0	0	0	80	230	0	1	0	1

DDH: FAGA214 UTM-N: 905,321.7 UTM-E: 592,344.8 UTM-ELEV: 1,302.0 TOTAL DEPTH: 492.8 SECTION: W 80
RFE: RFE DIR: 230 PLUNGE ANGLES: 11 312 DHD CALC: 1 SS CALC: 0

DDH	F DEPTH	T DEPTH	FEAT	REC CD	PARLL	UPPER PLANE		INTERNAL PLANE		LOWER PLANE		DHD
FAGA214	18.9	19.0	GC?			0	0	0	0	0	3	1
FAGA214	23.4	23.7	R			0	0	0	0	0	0	1
FAGA214	0.0	37.9	1G			0	0	55	0	0	3	1
FAGA214	0.0	40.8	1G			0	0	60	0	0	3	1
FAGA214	0.0	41.8	1G			0	0	60	0	0	3	1
FAGA214	45.0	46.0	R			0	0	0	0	0	0	1
FAGA214	0.0	48.8	1G			0	0	30	0	0	3	1
FAGA214	0.0	52.9	1G			0	0	50	0	0	3	1
FAGA214	53.0	55.8	XGB	3		50	0	0	0	20	3	1
FAGA214	58.2	60.0	XGB	1		0	0	0	0	0	3	1
FAGA214	60.0	64.0	N			0	0	0	0	0	3	1
FAGA214	66.4	67.1	XGB			0	0	70	0	0	3	1
FAGA214	67.3	68.3	XGB			0	0	70	0	0	3	1
FAGA214	0.0	79.1	1G			0	0	0	0	0	3	1
FAGA214	84.1	87.5	X1F			0	0	90	0	0	0	1
FAGA214	0.0	88.0	1G			0	0	0	0	0	3	1
FAGA214	0.0	88.8	1G			0	0	70	0	0	3	1
FAGA214	0.0	89.3	1G			0	0	0	0	0	3	1
FAGA214	0.0	98.4	1G			0	0	0	0	0	3	1
FAGA214	0.0	101.9	1G			0	0	0	0	0	3	1
FAGA214	120.2	120.9	G			50	270	0	0	0	3	1
FAGA214	122.2	125.0	GP	5		0	0	0	0	0	3	1
FAGA214	0.0	129.9	1G			0	0	0	0	0	3	1
FAGA214	0.0	130.0	1G			0	0	0	0	0	3	1
FAGA214	148.5	148.7	G			0	0	0	0	0	3	1
FAGA214	167.6	169.7	GPF	2		0	0	0	0	0	3	1
FAGA214	0.0	177.7	1G			0	0	70	0	0	3	1
FAGA214	178.6	178.9	G			65	0	0	0	65	0	1
FAGA214	180.1	180.3	X			0	0	0	0	0	0	1
FAGA214	0.0	188.9	1G			0	0	65	0	0	0	1
FAGA214	191.4	193.8	BP	3		0	0	0	0	0	0	1
FAGA214	199.0	202.8	NM			0	0	0	0	0	0	1
FAGA214	0.0	205.1	1G			0	0	0	0	0	0	1
FAGA214	207.0	207.4	G			0	0	0	0	0	0	1
FAGA214	0.0	224.5	1G			0	0	0	0	0	0	1
FAGA214	0.0	238.0	1G			0	0	85	0	0	0	1
FAGA214	266.8	267.0	BG			0	0	0	0	0	0	1
FAGA214	0.0	297.3	G			0	0	65	0	0	0	1
FAGA214	303.3	304.3	G			0	0	0	0	80	0	1
FAGA214	0.0	313.2	1G			0	0	75	230	0	0	1
FAGA214	318.4	318.6	G			45	260	0	0	40	0	1
FAGA214	321.2	325.5	MC			0	0	0	0	0	0	1
FAGA214	0.0	327.2	1G			0	0	70	0	0	0	1
FAGA214	327.2	331.1	GS			70	0	0	0	60	0	1
FAGA214	331.9	335.9	GS			0	0	30	50	0	0	1
FAGA214	336.3	339.3	BG			0	0	75	0	0	0	1
FAGA214	339.3	339.5	G			0	0	0	0	0	0	1
FAGA214	0.0	353.9	1G			0	0	0	0	0	0	1
FAGA214	354.9	356.6	GB			50	0	0	0	0	0	1
FAGA214	411.0	412.7	1G			75	0	0	0	75	0	1
FAGA214	431.1	435.1	1G			65	0	0	0	65	0	1

DOWN-HOLE FAULTS (DH020)

DDH: FAGA214 UTM-N: 905,321.7 UTM-E: 592,344.8 UTM-ELEV: 1,302.0 TOTAL DEPTH: 492.8 SECTION: W 80
RFE: RFE DIR: 230 PLUNGE ANGLES: 11 312 DHD CALC: 1 SS CALC: 0

DDH	F DEPTH	T DEPTH	FEAT REC CD	PARLL	UPPER PLANE		INTERNAL PLANE		LOWER PLANE		DHD
FAGA214	435.1	435.2	G3F		65	0	0	0	65	0	1
FAGA214	445.2	458.4	1G		0	0	0	0	0	0	1
FAGA214	458.4	460.5	D		0	0	0	0	0	0	1
FAGA214	460.5	461.5	G		0	0	0	0	0	0	1
FAGA214	463.5	463.7	G		0	0	0	0	40	0	1

CYPRUS ANVIL MINING CORPORATION

Page 1 of 16

DIAMOND DRILL CORE LOG

Date: 4 SEP 81

Hole Number: FAGA 214 (81-A214)

Project: GRUM 1981 DRILLING

Location: VANGORDA PLATEAU

Claim:

~~Terr. Plane~~ UTM Co-ords.: 6905321.7 N

592 344.8 E

Grid Co-ords: 80W

13 N

Elevation: 1302.0

Total Depth: 492.8 metres.

Reference Fabric Orientation Diagram:

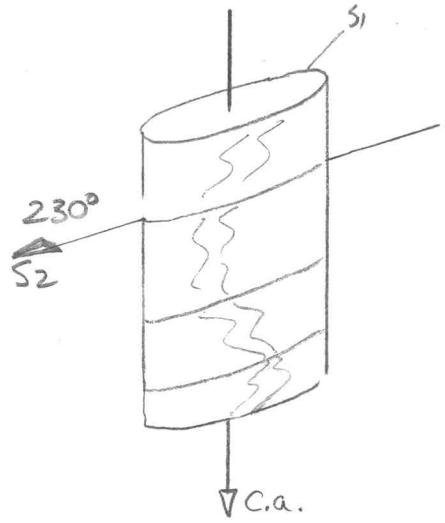

All symmetry determinations looking

NW with S2 dipping

SW with dip azimuth 230°.

Purpose: To Aid interpretation of structure and define ore on section 80W

Reason hole Terminated:

Logged by: RST

Date(s) Logged: 4 SEP 81

Drilling Contractor: Arctic Diamond Drilling

CORE Size	From	To
NQ		

Collar Cased and Capped: ____

Hole Cemented: DSJ - RST.

Steel down hole:

Started: August 31/81 Completed: ____

C.A.M.C. 1981 - E - 1

Cyprus Anvil Mining Corp.

DDH FAGA214 (2–8)

Diamond Drill Core Log Date: 4SEP81 Logged By: RST

Code	Drillhole	Elevation	Northing	Easting	Units (feet/metres)	R.F.E.	
	2 8	10 16	17 24	25 32	34 39	41 42	
T	FAGA214	1392.0	9053217.5	592344.8	metres	S2	

(DISCARD) ACID DIP TESTS

Code	Drillhole	Depth	Zenith Angle	True Azimuth	Comments
	2 8	10 14	22 26	28 32	34 56
R	FAGA214	0	180.0	0.0	AT COLLAR R
R	FAGA214	1052	175.0	.	H
R	FAGA214	1463	172.0	.	ACID DIP R x
R	FAGA214	1820	169.0	.	3.6 H
R	FAGA214	2912	169.0	.	1.9 R
R	FAGA214	2246	166.0	.	2.3 H x
R	FAGA214	2560	166.0	.	3.2 R x
R	FAGA214	2835	166.0	.	2.7 H
R	FAGA214	3161	164.0	.	3.3 R x
R	FAGA214	3280	164.0	.	1.2 H
R	FAGA214	3520	163.0	.	2.4 R
R	FAGA214	3834	163.0	.	3.1 H x
R	FAGA214	4097	163.0	.	2.6 R x
R	FAGA214	4319	162.0	.	2.2 H
R	FAGA214	4636	168.0	.	27m
R	FAGA214	4898	160.0	.	25m
		695	176.0	203.0	SPERRY-SUN
		1204	171.0	111.0	
		1814	168.5	117.0	
		2423	165.0	110.5	
		3033	163.0	124.0	
		3642	162.0	119.0	
		4252	161.0	110.0	
		4862	160.0	111.0	

Code	Drillhole	Comments, Errant Remarks, Snivellings and / or Lewd Suggestions
	2 8	10 56

DDH FAGA214 (2–8)

Cyprus Anvil Mining Corp.
Lithologic Log

Page 3 of 16

Date: Sept 4/81 Logged By: RST

180
13
117
180
8
172

Code	From	To	Recov.	No.	Unit	Description
1	10–14	16–20	22–24	26–28	30–34	35
L	00	158		1	*	Casing overburden
L	158	237		2	5A6	(5A19) Good black graphitic phyllite; narrow widely spaced SiO_2 partings c̄ py; 18.9-19.0 sandy gouge poss cave matl.
L	237	245		3	5A0	calcareous (5A19) graphitic
L	245	317		4	4A0	(5A319); to 26.2 is 4A0 graphitic rest is interbanded transitional rock 5A319 ↔ 4A0.
L	317	352		5	5D*	(5A6) starts with narrow interbands 1-2cm 5D-5A over 0.7m; then 5D* @ 33.5-33.9, 33.9-34.3 34.5-35.2. rest is laminated type 5A.
L	352	379		6	5A6	approaching 5B62 minor py in few SiO_2 bands. 0.1m gouge @ lower cut.
L	379	397		7	5B62	(5D*) chloritic 5D3 @ starts 0.2m, 38.6 (0.1m) and end 0.3m. 5D3 very weakly reactive to 1/8 HCl
L	397	530		8	5A6	±9 black graphitic phyllite veinlets throughout c̄ py minor SiO_2. Gouge @ 40.8 (0.1m), 41.8 (0.1m), 48.8 (0.1m) 52.9 (0.1m) Sub//SZ. Broken core
L	530	558		9	4A4*	(5A6, 5D*) Bx gouge (0.7m Rec) 5A gouge at start and middle of unit
L	558	561		10	5D*	dolomitic.
L	561	567		11	5A61	minor SiO_2 bands
L	567	640		12	5A6	Gouge bx. triconed. 60m-64m no rec due to triconing; 58.2-60.0 (0.3m rec) gouge and bx.
L	640	677		13	5A61	(4A4, 4A0) 4A0 at start (0.1m) 4A4 as narrow 0.1m bands at 65.5, 66.3; Gouge bx @ 66.4 to 67.1m. broken sharp lower cut
L	677	683		14	4A0	(4E4) 0.1m 4E4 @ start Bxd gouged 4A0 over rest lower cut gouge //SZ
L	683	691		15	5D*	(4D4) weird. bxtd upper cut. 2 less then 0.1m bands 4D4 over 1st ½ of unit in green chloritic phyllite
L	691	695		16	4D4	(5C*) 0.05m band 5C in middle.
L	695	708		17	5C3	green chloritic. Vestiges? of chlorite filled amygdules.
L	708	715		18	4C0	nb. green chert band (0.1m) @ 71.0 m
L	715	718		19	5D3	green chloritic phyllite

DDH FAGA214 (2 — 8)

Cyprus Anvil Mining Corp.

Lithologic Log

Date: Sept 4/81 Logged By: RST

Code	From	To	Recov.	No.	Unit	Description
1	10 14	16 20	22 24	26 28	30 34	35
L	71 8	72 2		20	4D0	/4A41 1st ½ 4D0 2nd ½ 4A41
L	72 2	74 2		21	5C3	4A4 3cm 4A4 in middle of unit
L	74 2	74 7		22	4D4	(4A4) 0.1m 4A41 @ end of unit
L	74 7	76 9		23	5C*	chloritic to weakly altered SC weakly calcareous fuchsite blebs near end. sharp lower cnt //S2
L	75 9	76 2		24	4E4	>10% Pb+Zn
L	76 2	76 6		25	4A0	
L	76 6	77 0		26	4E4	(4E0) 0.1m of 4E0
L	77 0	78 0		27	4A0	(4A4) upper 0.3m is 4A4 some py bands 5cm and massive
L	78 0	80 9		28	4E4*	(4A0, 5A0) 4A0 @ 78.3-78.7 (fold nose) and as two narrow 0.1m bands @ 79.5 & 80.3 & 80.7 appear as tho' clasts in sulphide dominant matrix. 5A0 gouge (0.1m) @ 79.1
L	80 9	81 4		29	4A0	
L	81 4	82 5		30	4E4	(4A4, 4E0) 0.2m 4E0 @ start, 4A4 as narrow bands
L	82 5	88 0		31	4D4	(4A14) interbanded high grade; high SiO_2 4A4 +10% Pb+Zn overall. gouge lower cnt.
L	88 0	93 0		32	5A19	black graphitic phyllite & py clasts. 5A gouge at 88.0 (0.1m), 88.8 (3cm //S2), 89.3 (4cm)
L	93 0	93 4		33	4A41	
L	93 4	94 1		34	4A0	
L	94 1	94 7		35	4E0	red brown sph. occurs as narrow lams along S2 minor py lams also
L	94 7	95 4		36	4A14	Very high grade 4A thick 2cm sulphide bands
L	95 4	96 8		37	4A0	only minor pyrite
L	96 8	98 6		38	5A6	±9±1 gradational over 1 metre from weakly pyritic graphitic phyllite to black graphitic phyllite @ Gouge @ 98.4m
L	98 6	102 1		39	4A4	(5D*) instead of pyritic SiO_2 essentially sph+gn SiO_2 bands. 5D* as 6 narrow green chloritic bands in middle of unit. Largest 0.1m avg 4cm. gouge (0.1m) 0.2m from end.
L	102 1	111 2		40	5B35	/5D35 50:50 interbanded. avg 0.5m

DDH FAGA214 (2–8)

Cyprus Anvil Mining Corp.

Lithologic Log

Date: Sept 4/81 Logged By: PST

Code	From	To	Recov.	No.	Unit	Description
1	10–14	16–20	22–24	26–28	30–34	35
L	1112	1176		41	5B38	strongly calcareous variably chloritic matr. Green chlorite phyllite. Remnant?
L	1176	1199		42	5C3	chloritic amygdules. Calcite bands.
L	1199	1378		43	5B38	strongly calcareous variably chloritic. Gouge @ 120.2-120.9 (50% gouge), 122.2-125.0 (50% gouge - 0.9m Rec), 129.9 (0.05m), 130.0 (0.05m)
L	1378	1392		44	5C35	strongly calcareous; chlorite-calcite bands laminated.
L	1392	1461		45	5B3	±8 similar to units 41 & 43 less chlorite
L	1461	1509		46	5C35	as unit 44 Gouge 148.5-148.7 (50% gouge)
L	1509	1520		47	5B38	as units 41, 43,
L	1520	1570		48	5C35	(5B38, OQO) 0.1m qtz vein // S_2 @ 152.5, 154.4 5B38 at top, middle, bottom of unit < 0.4m each
L	1570	1610		49	5C35	strongly calc as units 44, 46
L	1610	1662		50	5B38	as units 41, 42 5% of chlorite converted to biotite
L	1662	1668		51	5C35	as unit 44, 46, 48
L	1668	1676		52	5B38	(OQO) Qtz veining 167.1-167.5 and last metre calcite also in vein chlorite in vein areas converted partially to biotite.
L	1676	1697		53	5B38	Gouge (0.3m Rec)
L	1697	1740		54	5A68	Abrupt change in lithology below fault. calc assoc. with fractures, veinlets, minor chlorite forms some → biotite.
L	1740	1777		55	5A38	(OQO) minor qtz veins. chlorite close to veins some → biotite 0.05m gouge // S_2 @ lower cnt
L	1777	1808		56	5A3	±1±9 strongly calcareous; gouge & bx @ 178.6-178.9 // S_2, crackle bx. 180.1-180.3. minor
L	1808	1889		57	5A19	(4A0, 5A3) Mixed transitional unit. About 40% of unit 4A0 nearer bottom. Also minor narrow 5A3 bands. 0.05m gouge 0.1m from end // S_2
L	1889	1963		58	5A3	±9 (5D3, OQO) minergy <5%. Qtz veins @ 189.8 (0.1m), 190.0, 193.4 (0.2m) weakly altered 5D3 @ 191.4 (0.2m); 191.4-193.8 broken core (0.6m Rec)
L	1963	1983		59	5A6	(OQO) 50% qtz veining with assoc. biotite and

DDH F.A.G.A.2.1.4 (2–8) Cyprus Anvil Mining Corp. Page 6 of 16

Lithologic Log Date: Sept 4/81 Logged By: RST

Code	From	To	Recov.	No.	Unit	Description
1	10–14	16–20	22–24	26–28	30–34	35
						hard green mineral poss. chert or diopside?
L	1983	1990		60	5C35	calcareous weakly banded with Adj chlorite → biotite. NB biotite especially coarse 90° of fine peripheral to calcite bands.
L	1990	2028		61	5B6	? one small peice ⇒ mislatch 0.1m Rec.
L	2028	2041		62	5C35	as unit 60 30% of chlorite → biotite
L	2041	2051		63	5B62	Gouge (3cm) @ lower cnt.
L	2051	2079		64	5D3	(5B62) Gouge @ 207.0–207.4 40° to c.a ± 5B62 in gouge. Also 5B62 @ 207.3–207.5
L	2079	2106		65	5A6	(5B628, 5D3) minor chlorite lams @ 0.2m 5D3 @ end of unit.
L	2106	2222		66	5B62	±8±3 chlorite as unit 65. CO_3 in fracs. & along Sz
L	2222	2235		67	5A6	laminated
L	2235	2246		68	5B62	finely laminated, Gouge 0.1m from end 45° to c.a.
L	2246	2286		69	5B62	(QQO) 20% veined as 5cm veins Qtz ± minor calc. in veins. Chlorite also assoc. with veins; all more or less ⊥ to c.a
L	2286	2381		70	5B62	laminated gouge @ end of unit 0.1m // Sz
L	2381	2384		71	5C35	chlorite, calc. banded [5D3]
L	2384	2438		72	5B62	(QQO) 0.2m qtz vein @ start & 6 avg 4cm over last metre.
L	2438	2465		73	5B62	(5D3) narrow 0.1m bands 5D3 at start and end of unit
L	2465	2593		74	5B62	(QQO) 10% of unit qtz veins + minor CO_3 also minor CO_3 on fractures.
L	2593	2627		75	5A6	(5B62) 50:50. more 5A6 towards bottom of unit. lower cnt qtz vein.
L	2627	2641		76	5B62	
L	2641	2645		77	5D3	(5B62) 60:40 interbands
L	2645	2663		78	5B62	(5A6)
L	2663	2697		79	5A6	(5D3) Bx & gouge at 266.8–267.0 5D3 as narrow 0.1m bands 20% of unit.
L	2697	2737		80	5B62	(QQO) 0.2m qtz vein at start and end of unit.
L	2737	2847		81	5B6	±2±8 20% chlorite laminations, carbonaceous variably.

DDH F.A.G.A2.1.4 (2–8)

Cyprus Anvil Mining Corp.

Lithologic Log

Date: Sep'8 Logged By: RST

Code	From	To	Recov.	No.	Unit	Description
1	10–14	16–20	22–24	26–28	30–34	35
L	2847	2871		82	5A6	Banded
L	2871	2888		83	5B6	±4 transitional unit between 82 & 84
L	2888	2901		84	4L0	
L	2901	2911		85	4L1	(0Q0) 0.3m qtz vein in middle of unit
						3cm qtz vein at end.
L	2911	2920		86	4G4	(4E4*) 4G4 @ top and bottom of unit 60%
						Calcareous blebs to 1.0cm avg less. Thru out;
						approaching 4K
L	2920	2937		87	4E4*	Similar CO_3 blebs to v. 86. Also minor CO_3 in matrix.
L	2937	2946		88	4D0	(4D4, 5D4*) 0.1m 5D4* 0.3m from start 4D4
						over 1st 3rd of unit. 6% Pb+Zn overall.
L	2946	2950		89	5D4*	ankeritic, fuchsitic
L	2950	2959		90	4C0	sericitic <2% Pb+Zn; non-pyritic → 4L4
L	2959	2973		91	4L14	1-2% Pb+Zn substially more sericite than 90 gouge // S_2 lower cnt
L	2973	3027		92	5B61	±9 occasional minor py 1-2%.
L	3027	3044		93	5B4	(4L0) transitional unit Gouge 303.3 to 304.3 lower cont. // S_2, upper indeterminate
L	3044	3079		94	5B6	±4±1 (4L2) transitional unit; 4L2 304.4-305.3
L	3079	3097		95	4L2	py on S_2 to 1cm over last 0.3m
L	3097	3109		96	5B62	
L	3109	3161		97	4L0	(5B6±8) Mixed unit chlorite near qtz veinlets.
						313.2 gouge // S_2
L	3161	3198		98	5B6	±2±8 (0Q0) 20% qtz veins avg 3cm // S_2
						minor CO_3 in veins + chlorite; gouge 318.4-318.6 upper contact 45°/260° lower " 40°/0°
L	3198	3212		99	4L0	(5B4) transitional unit mixed.
L	3212	3255		100	4E4	(4E0, 4L0) MISLATCH;; 324.3 – 324.5 redrilled
						mush; Assays will not represent unit.
L	3255	3265		101	4A43	35% pyrite wispy graphitic bands
L	3265	3272		102	4A4	+7% Pb+Zn becoming greater graphite content
						towards end of unit. 0.1m gouge // S_2 lower cnt.
L	3272	3284		103	5A6	sheared & gouged // S_2 } entire interval sheared // S_2
L	3284	3311		104	5B61	" " " " " } no individual gouge zone
L	3311	3319		105	5A19	approaching 4A0 no base metal sulfs.
	3319	3359		106	4L0	sheared & gouged core; upper & lower
						contacts indeterminate; both gouge &
						sheared, broken core; internal gouge zones
						≈ 30°/50° — prob. meaningless

DDH FAGA214 (2–8)

Cyprus Anvil Mining Corp.

Lithologic Log

Date: 12 Sept. 81 Logged By: [illegible]

Code	From	To	Recov.	No.	Unit	Description
1	10–14	16–20	22–24	26–28	30–34	35
L	3359	3363		107	5B269	⟹ 4A0
	3363	3395		108	4L0	many gouge zones & broken core thru interval
						plurality of gouge 11 S_2 incl 15 cm.
						gouge ending at 339.45, lower contact
						& upper contact indeterminate
L	3395	3494		109	5B6	[3G0]
L	3494	3510		110	4L2	(5B64)
L	3510	3549		111	5B6	(5B62); broken core & gouge 353.8-353.9
						no attitudes possible; 1cm gouge 11 S_2
						@ 353.5M
L	3549	3566		112	5B64	[3G4]; gouge & broken core over interval;
						excellent upper contact 50°/0° where
						fault dips same direction as S_2 but more
						steeply; lower contact indeterminate;
						much internal gouge 11 & steeper than S_2
L	3566	3620		113	4L0	±2±7±* dolomite
L	3620	3719		114	5B64	musc + bio ± chlorite phyllite transitional
						to schist wkly altered; unit marks
						first appearance of biotite in holes;
						[3D8]
L	3719	3742		115	4L21	biotitic
L	3742	3822		116	5B68	[3G8]; [3D8 chloritic] i.e. rk. is a
						lt med. gray green, non-calc musc-chlor
						phyll ⟹ schist
L	3822	3908		117	5B38	strongly biotitic; unit is dk. brown
						mod. calc bio >> chlor - calcite phyll.
						to schist; looks like patchily calc
						5B0 @ biotite grade; [5B0 biotitic] [3D86]
L	3908	3944		118	5B6	biotitic; much less biotitic than #117
						i.e. bio + musc + chlor phyll/schist; [5B6], [3G0]
L	3944	4022		119	5B68	[3G8] c.f. unit 116
L	4022	4063		120	5B62	m. dk. gray, non-calc. phyll.
L	4063	4070		121	5B68	as # 116, 119
L	4070	4092		122	5A6	w/ 0.1M 5D3 band @ 408.3M
L	4092	4096		124	1PQ0	bull qtz vein/pod.; no atts.
L	4096	4110		125	5A6	

DDH FAGA214 (2–8)

Cyprus Anvil Mining Corp.

Lithologic Log

Date: 12Sept81 Logged By: [illegible]

Code	From	To	Recov.	No.	Unit	Description
1	10–14	16–20	22–24	26–28	30–34	35
L	4110	4127		126	5A6	incipiently gouged ∥ S_2 over entire interval;
L	4127	4135		127	5A3	(5A38)
L	4135	4142		128	5B6	biotitic; lt. gray & brown (bio) banded non-calc. phyll w/ few v. thin OQO sweats
L	4142	4164		129	5C6	m. dk. yell. green, massive, non-calc. metabasite w/ no 5D/F "apron"; banded [5D6]
L	4164	4175		130	5B683	biotitic; well banded, patchily calcareous dk. brown, m. green, & lt. gray banded phyllite; prograde ≡ to 5B63
L	4175	4202		131	5C6	as #129 w/ strong banding ∥ S_2; relict ign. text [5D6]
L	4202	4208		132	5B26	(4L0) minor 0.5 cm. py bands @ 420.5
L	4208	4213		133	5C6	as #129, 131; no 5D0; relict ign. porphyritic texture [5D6]
L	4213	4227		134	5A6	(5B26)
L	4227	4243		135	5C6	as previous units 129, 131, 133; interleaving of this lithology w/ graphitic pelites below (unit 136) ⟹ possible tuffaceous origin for all units called 5C; "relict ign. texture" may be prograde clino-amphibole porphyroblasts; [5D6] alternate interpretation favored i.e 5D
L	4243	4256		136	5A3	(5D6); 1-2 cm. thick 5D6 interleaved for top 0.3 M of interval
L	4256	4260		137	5A6	
L	4260	4311			5C6	[5D6] see comments #135; 430.7–431.1 is carbonated w/ white dolomite — could be " , vesiculated flow top ?? or 5D* / 5F* (more likely) SHIT ITS COLD!! quit sniveling!
L	4311	4351		138	5A6	numerous incipient gouge zones ∥ S_2
L	4351	4352		139	4L0	[1D4] gouge ∥ S_2; thrust fault?
L	4352	4378		140	4L0	[1D4] staurolitic w/ v. minor andalusite largely a qtz-musc-staur ± bio ± and finely xline schist
L	4378	4409		141	5C6	biotitic; highly fractured & carbonated

DDH EAGA214 (2 … 8)

Cyprus Anvil Mining Corp.

Lithologic Log

Page 10 of 16

Date: 12 Sept. 81 Logged By: DSJ

Code	From	To	Recov.	No.	Unit	Description
1	10 … 14	16 … 20	22 … 24	26 … 28	30 … 34	35
L	4409	4429		142	100	muscovite, non-carbonaceous; qtz-musc > bio staur. schist; staur & qtz define lamellar monomineralic bands
L	4429	4440		143	5C6	[5D6] minor siliceous bands favor 5D
L	4440	4445		144	100	muscovite & chlorite
L	4445	4452		145	100Q	(100 muscovite)
L	4452	4584		146	100	musc >> bio ± gar ± and ± staur schist; upper 1/3 of unit is staur. bearing, middle 1/2 of unit is andalusite " , remainder is garnetiferous; entire interval incipiently gouged
L	4584	4605		147	1B0	[3F0] m. gray & white, thinly banded finely xlline calcitic marble heavily brecciated
L	4605	4615		148	100	(10A0) gouge; heavily altered & gouged 100 w/ 10A0 dikes cutting gouge; no attitudes poss.
L	4615	4635		149	10B7	brotitic w/ 0.5-1.0 cm. k-spar megacrysts
L	4635	4637		150	10B7	?? gouge; white kaolinitic gouge?? no attitude on upper contact, lower contact = 11 S_2
L	4637	4658		151	1CD	brotite mottled variant; musc >> bio
L	4658	4677		152	10C5	musc.-bearing peg. to cselyxlline granite cream in color
L	4677	4719		153	1CD	brotite mottled c.f. 151 but more brotitic w/ bio >> musc; bio ≡ v. dk. brown
L	4719	4783		154	1C0	brotitic; dk. brown bio >>> musc + gar + qtz + plag sc/sist to gneiss; mod. banding w/ SiO_2
L	4783	4878		155	1CD	migmatitic w/ 10C0 + 10C5 "sweats" throughout; unit is mottled dk. brown bio > musc schist w/ light colored musc (kaolinite??) patches; light colored phyllosilicates tend to devel. along fractures — kaolinite??
L	4878	4928		156	10B7	normal, med.-xlline k-spar megacrystic bio-qtz monz. of Anvil Batholith, 1cm " gradational/intrusive contact

Hole = 175' short

EOH

DDH FAGA214 (2–8)

Cyprus Anvil Mining Corp.
Structural Log

Date: Sept 5/81 Logged By: PBT

Code	From	To	Feature	Sym	S_0 Dip	S_0 Direct.	S_1 Dip	S_1 Direct.	S_2 Dip	S_2 Direct	Description
1	10–14	16–20	22–24	26	28	32	34	38	40	44	
S		77 3	CS2	3					65	230	
S		18 2	CS2	Σ					65		
$	23 4	23 7									rubble
S		24 2	CS2	Z					60		
S		26 0	CS2	3					60		
S		31 7	CS2	Z					60		
S		32 8	CS2	Σ					60		
S		33 8	CS2	S					65		
S		35 3	CS2	Σ					60		
S		37 2	CS2	3					55		Gouge @ 38.0 //S2
S		39 8	CS2	3					60		
$		40 9									Gouge//S2
$	40 9	48 0	FRC		90	000					So = fractures qtz/py sealed
S		44 2	CS2	Z					70		
$	45	46 0									Rubble
S		46 1	IND	P					20		
$		48 7									gouge sub//S2
S		49 7	IND	P					30		
S		51 8	CS2	Z					50		
$	52 9	55 8									Gouge & bx zone sub//S2
S		56 1	IND	P					20		
S		68 5	IND	P					65		
$	66 5	71 1									~~66.5~~ Gouge bx //S2
S		69 7	IND	P					70		
S		72 2	IND	P					60		
S		73 6	CS2	Z					60		
S		77 4	CS2	Z					65		
S		80 3	CS2	3					55		
S		81 0	CS2	M					75		
S		82 4	CS2	Σ					60		
S	84 1	87 5	FRC	R	90	00			50		FRC & weak development of bx
S		89 3	CS2	Z					70		Gouge here ? orientation
S		90 8	CS2	Z					70		
S		91 8	CS2	Z					70		
S		93 7	CS2	S					70		
S		95 6	CS2	S					70		

DDH FAGA214 (2–8)

Cyprus Anvil Mining Corp.
Structural Log

Date: Sept 5/81 Logged By: RST

Code	From	To	Feature	Sym	S_0 Dip Direct.	S_1 Dip Direct.	S_2 Dip Direct	Description
1	10–14	16–20	22–24	26	28–32	34–38	40–44	
S		965	I,N,D	D			75 230	
S		998	C,S,Z	B			60	
S		1030	I,N,D	P			50	
S		1057	I,N,D	P			65	
S		1071	I,N,D	P			70	
S		1103	C,S,Z	B			70	
S		1120	C,S,Z	M			60	
S		1139	C,S,Z	S			60	
S		1154	C,S,Z	S			60	
S		1175	C,S,Z	S			60	
S		1200	I,N,D	P	50	270	70	So HWg fault zone to 1250
S		1272	I,N,D	P			70	
S		1330	I,N,D	P			70	
S		1356	C,S,Z	M			80	
S		1365	C,S,Z	S			75	
S		1401	C,S,Z	B			80	
S		1425	C,S,Z	B			80	
S		1458	C,S,Z	S			65	
S		1484	C,S,Z	B			65	
S		1512	C,S,Z	B			70	
S		1540	I,N,D	P			70	
S		1572	I,N,D	P			70	
S		1602	I,N,D	P			75	
S		1628	I,N,D	P			80	
S		1639	C,S,Z	E			70	
S		1667	C,S,Z	M			70	
S		1719	C,S,Z	B			60	
S		1745	C,S,Z	S			70	
S		1762	C,S,Z	S			70	
S		1798	C,S,Z	S			65	
S		1815	C,S,Z	Z			65	
S		1852	C,S,Z	E			65	
S		1872	C,S,Z	S			65	
S		1945	I,N,D	P			70	
S		1988	I,N,D	P			40	
S		2037	I,N,D	P			70	

DDH EAGA214 (2 8)

Cyprus Anvil Mining Corp.

Structural Log

Date: 12 Sept 81 Logged By: [signature]

Code (1)	From (10–14)	To (16–20)	Feature (22–24)	Sym (26)	S_0 Dip (28–32)	S_0 Direct.	S_1 Dip (34–38)	S_1 Direct.	S_2 Dip (40–44)	S_2 Direct	Description
S		2143	CS2	Z			65	050	75	230	
S		2185	CS2	Z					55	230	
S		2247	CS2	Z					75	230	
S		2295	CS2	Z					80	230	
S		2319	CS2	Z					80	230	⇒ PS_2
S		2405	CS2	S					85	230	
S		2460	CS2	H					90	230	Horizontal S_2
S		2515	CS2	Z					80	230	This hole's the pits
S		2571	CS2	H					90	230	for structure!!
S		2625	CS2	D					70	230	
S		2693	CS2	H					90	230	
S		2741	CS2	Z					75	230	
S		2795	CS2	Z					70	230	
S		2876	CS2	Z					70	230	
S		2920		R					75	230	
S		2980	CS2	S					65	230	
S		3004	CS2	Z					80	230	
S		3054	CS2	S					80	230	
S		3124	CS2	S					75	230	
S		3165	CS2	Z					75	230	
S		3200	PS2						75	230	
S		3270	CS2	Z					70	230	
S		3325	CS2	Z					60	230	
S		3412	CS2	Z					75	230	
S		3475	CS2	Z					70	230	
S		3515	CS2	D					80	230	
S		3580	PS2						75	230	
S		3636	CS2	S					60	230	
S		3693	CS2	Z					80	230	
S		3758	CS2	Z					70	230	PS2 dominant to EOH
S		3812	PS2						65	230	
S		3877	PS2						70	230	
S		3945	PS2						80	230	
S		3995	PS2						80	230	
S		4038	PS2						75	230	
S		4086	PS2						75	230	

DDH FAG.A.214 (2 / 8) Cyprus Anvil Mining Corp. Page 14 of 16

Structural Log Date: 12 Sept 81 Logged By: DBT

Code	From	To	Feature	Sym	S_0 Dip Direct.	S_1 Dip Direct.	S_2 Dip Direct	Description
1	10 14	16 20	22 24	26	28 32	34 38	40 44	
S		411.5	PS12				75 230	
S		425.5	CS12Z				80 230	
S		431.0	PS12				45 230	
S		436.5	PS12				45 230	
S		441.30	PS12				50 230	
S		448.9	PS12				55 230	
S		452.4	PS12				80 230	
S		465.5	PS12				40 230	
S		472.4	PS12				35 230	} could be S1
S		476.4	PS12				30 230	}
S		486.6	CS12M				80 230	could be Z

C.A.M.C. 1981 - E - 4

DDH EAGA214 (2–8) Cyprus Anvil Mining Corp

Page 15 of 16

Logged by RBT

ASSAY LOG (SAMPLER'S COPY) Date Sept 5/81 Sampled by

CODE	FROM	TO	SAMPLE	INTR.	REC (m)	UNIT	DESCRIPTION
1	10–14	16–20	22–26	28–30	32–34	36–40	42
P	1530	558	115518	28	07	4A4*	(SA6, SD*) Bx gouge
P	677	683	115519	06	05	4A0	(4E4)
P	683	691	115520	08	07	5D*	(4D4)
P	691	695	115521	04	04	4D4	(5C*)
P	708	715	115522	07	07	4C0	
P	718	722	115523	04	04	4D4	/4A4 1.
P	742	747	115524	05	05	4D4	(4A4)
P	759	762	115525	03	03	4E4	
P	762	766	115526	04	03	4A0	
P	766	770	115527	03	03	4E4	(4E0)
P	770	780	115528	10	10	4A0	(4A4)
P	780	795	115529	15	15	4E4*	(4A0, SA0)
P	795	809	115530	14	14	4E4*	(4A0, SA0)
P	809	814	115531	05	05	4A0	
P	814	825	115532	11	11	4E4	(4A4, 4E0)
P	825	845	115533	20	20	4D4	(4A14)
P	845	865	115534	20	20	4D4	(4A14)
P	865	880	115535	15	15	4D4	(4A14)
P	930	934	115536	04	04	4A4 1	
P	934	941	115537	07	07	4A0	
P	941	947	115538	06	06	4E0	
P	947	954	115539	07	07	4A14	
P	954	968	115540	18	15	4A0	
P	986	1006	115541	20	20	4A4	(SD*)
P	1006	1021	115542	15	09	4A4	(SD*)
P	1808	1828	115543	20	20	5A19	(4A0, SA3)
P	1828	1848	115544	20	20	5A19	(4A0, SA3)
P	1848	1868	115545	20	18	5A19	(4A0, SA3)

DDH FAGA214 (2–8) Cyprus Anvil Mining Corp

Page 16 of 16

Logged by RST

ASSAY LOG (SAMPLER'S COPY) Date _____ Sampled by _____

CODE	FROM	TO	SAMPLE	INTR.	REC (m)	UNIT	DESCRIPTION
	10–14	16–20	22–26	28–30	32–34	36–40	42
P	1868	1889	115816	21	17	SA19	(4A0, SA3)
P	2911	2937	117716	26	26	4GE4	(4G4)(4E4)
P	2937	2959	117717	22	22	4DC	(5D4*)
P	2959	2973	117718	14	14	4K14	
P	3121	3125	117719	43	16	4E4	MISLATCHED INTERVAL
P	3125	3172	117810	17	17	4A4	(4A43)

C.A.M.C. 1981 - E - 5

DDH FAGA214 Cyprus Anvil Mining Corp. Page _____ of _____

2 Meters 8 Structural Log Date: _____ Logged By: _____

Code	From	To	Feature	Sym	S_0 Dip Direct.	S_1 Dip Direct.	S_2 Dip Direct	Description
1	10 14	16 20	22 24	26	28 32	34 38	40 44	
F	1189	1190	GC?					gouge
F		1379	IG			55 000		gouge 11 S_2
F		1408	IG			60 000		" sub 11 S_2
F		1418	IG			60 000		" "
F		1488	IG			30 000		" "
F		1529	IG			50 000		" "
F	1530	1558	XGB	3	50 000		20 000	bxia & gouge 11 S_2
F	1582	1606	XGB	1				gouge & bxia, 0.3m rec
F	1600	1640	N					no core — tricored
F	1664	1671	XGB			70 000		gougey bxia
F	1678	1683	XGB			70 000		fractured, gouged.
F		1791	IG					gouge
F		1880	IG					" 5A
F		1888	IG			70 000		" 3cm 11 S_2
F		1893	IG					"
F		1984	IG					"
F		2019	IG					"
F	1202	2092	G		50 270			gouge, 50%
F	1222	1250	GP	5				" "
F		1299	IG					"
F		1300	IG					"
F	1485	1487	G					" , 50%
F	1676	1697	GPFR					gouge, .3m recd.
F		1777	IG			70 000		" 11 S_2
F	1786	1789	G		65 000		65 000	" "
F	1801	1803	X					crackle bxia
F		1888	IG			65 000		gouge 11 S_2
F	1990	2028 (1938)	BP NM	3				.1m recd — mustatch
F		2051	IG					gouge
F	2070	2074	G					gouge 40° to ca.
F		2245	IG					gouge 45° " "
F		2380	IG			85 000		" 11 S_2
F	2668	2670	BG					bxia & gouge
F		2973	G			65 000		gouge 11 S_2
F	3033	3043	G				80 000	" upper IND lower 11 S_2
F		3132	IG			75 230		" 11 S_2

2 lines →

DDH FAGA214 (2 meters 8)

Cyprus Anvil Mining Corp.

Structural Log

Page _____ of _____

Date: _____ Logged By: _____

Code	From	To	Feature	Sym	S_0 Dip Direct.	S_1 Dip Direct.	S_2 Dip Direct	Description
1	10 14	16 20	22 24	26	28 32	34 38	40 44	
F	3184	3186	G		45 260		40 000	gouge
F	3212	3255	MC					mistatch
F		3272	1G			11 RFE		gouge 11 S_2
F	3272	3311	GS		11 RFE		11 RFE	sheared 11 S_2 no indiv gouge zone
F	3319	3359	GS			30 050		" & gouged u/l IND
								internal 30°/050
F	3363	3393	BG			11 RFE		gouged & broken core
F	3393	3395	G					gouge, u/l IND
F		3539	1G					" IND
F	3549	3566	GB		50 000			gouge & broken core; upper
								contact 50/000 lower IND
F	4110	4127	1G		75 000		75 000	gouge 11 S_2
F	4311	4351	1G		65 000		65 000	gouge 11 S_2
F	4351	4352	G3F		65 000		65 000	gouge – thrust?
F	4452	4584	1G					incip. gouged
F	4584	4605	D					heavily alt'd & gouged no atts poss
F	4605	4615	G					
F	4635	4637	G				40 000	gouge; upper IND
								lower 11 S_2
F	234	237	R					
F	450	460	R					
F	841	875	X1F			90 000		

> lines

227

80 W

DRILL HOLE : FAGA227

NORTHING : 905,275.0

EASTING : 592,303.5

ELEVATION : 1,301.3

TOTAL DEPTH : 205.1

SECTION : W 80

R.F.E. : S2

RFE DIRECTION: 295

PLUNGE ANGLE : 11

PLUNGE DIRECT: 312

DHD CALC: 1

SS CALC: 0

DETAIL RECORD COUNTS:

NOS ORE-SAMPLES: 12

NOS DOWN-H-SURVEYS: 5

NOS DOWN-H-LITHOLOGY: 55

NOS DOWN-H-STRUCTURE: 34

NOS DOWN-H-FAULTS: 22

NOS DOWN-H-SPLINES: 5

NOS COMPOSITES: 0

DDH: PAGA227 UTM-N: 905,275.0 UTM-E: 592,303.5 UTM-ELEV: 1,301.3 TOTAL DEPTH: 205.1 SECTION: W 80
RFE: S2 RFE DIR: 295 PLUNGE ANGLES: 11 312 DHD CALC: 1 SS CALC: 0

DEPTHS FROM	DEPTHS TO	SAMPLE NO.	INT.	REC.	ROCK UNIT	ASSAYS S.G. PULP	CU %	PB %	ZN %	AG(AA) G/MT	AG(FA) G/MT	AU(FA) G/MT	PO %	PY %	TOT FE	BAO %	HG %	MN %	AS %	BA %	S.G. W.R.
57.9	60.4	12426	2.5	2.3	4A4	2.96	.06	1.79	3.47	38.00		.62	1	5	6						
60.4	62.9	12427	2.5	2.5	4A0	2.92	.04	1.17	1.83	24.00		.27		5	5						
62.9	64.1	12428	1.2	1.2	4C5	2.80	.02	1.24	3.09	24.00		.14	1	1	2						
64.1	65.5	12429	1.4	1.4	4D54	3.10	.04	4.67	8.77	82.00		.82	1	5	7						
65.5	66.9	12430	1.4	1.4	4D54	3.20	.08	6.35	11.00	103.00		.89	2	4	6						
66.9	70.0	12431	3.1	3.1	4A0	2.92	.08	1.15	2.00	22.00		.34	1	4	5						
70.0	71.4	12433	1.4	1.4	4A0		.08	.94	.19	18.00											
71.4	73.3	12434	1.9	1.9	5A19		.02	.22	.47	6.00											
73.3	75.6	12435	2.3	2.3	4A4	3.31	.04	3.64	6.62	72.00		.48	2	9	11						
75.6	77.6	12436	2.0	2.0	4E4	4.31	.08	8.82	18.70	188.00		1.37	3	15	19						
131.4	132.1	12437	.7	.7	4A4		.04	4.48	11.70	82.00											
134.7	137.1	12438	2.4	.0	4A0		.04	1.26	1.80	22.00											
WEIGHTED AVERAGE																					
57.9	77.6		19.7	19.5		2.64	.05	2.82	5.31	55.28		.49	1	5	6						
131.4	132.1		.7	.7			.04	4.48	11.70	82.00											
134.7	137.1		2.4	.0			.04	1.26	1.80	22.00											

DDH: FAGA227 UTM-N: 905,275.0 UTM-E: 592,303.5 UTM-ELEV: 1,301.3 TOTAL DEPTH: 205.1 SECTION: W 80
RFE: S2 RFE DIR: 295 PLUNGE ANGLES: 11 312 DHD CALC: 1 SS CALC: 0

DEPTH	ZENITH	AZIMUTH
0.000	180.000	0.000
19.200	179.000	303.000
74.100	178.000	133.000
135.000	177.800	143.000
196.000	175.000	133.000

DDH: FAGA227 UTM-N: 905,275.0 UTM-E: 592,303.5 UTM-ELEV: 1,301.3 TOTAL DEPTH: 205.1 SECTION: W 80
RFE: S2 RFE DIP: 295 PLUNGE ANGLES: 11 312 DHD CALC: 1 SS CALC: 0

DEPTH	UNIT	CODE	DESC	RECOVERY	IND
9.4	0001	#		0.0	1
19.0	0002	5C*3	(5D*,83)	0.0	1
20.3	0003	5D3*	(5B0) MINOR	0.0	1
27.7	0004	5B0	->588 DOWNHOLE	0.0	1
57.7	0005	5C3*	(5D3*)	0.0	1
57.9	0006	4E0		0.0	1
62.9	0007	4A0	84	0.0	1
64.1	0008	4C5		0.0	1
66.9	0009	4D54		0.0	1
68.4	0010	4A0		0.0	1
68.6	0011	4A0	(4C0)	0.0	1
71.4	0012	4A0		0.0	1
72.2	0013	5AC		0.0	1
73.3	0014	5A1	89	0.0	1
75.6	0015	4A4	(4A34)	0.0	1
77.6	0016	4E4	(4F4)(4E45)	0.0	1
79.0	0017	5C*		0.0	1
79.2	0018	4D4		0.0	1
90.2	0019	3G9	[5A6]	0.0	1
91.9	0020	3G0		0.0	1
93.5	0021	5D8		0.0	1
93.8	0022	4L0		0.0	1
106.6	0023	3G9	[5B62]	0.0	1
108.8	0024	3G0	89 (5D*)	0.0	1
117.6	0025	3G0	(10Q0) "CS"	0.0	1
118.9	0026	5D*	[3B*]	0.0	1
120.1	0027	3G0	"CS"	0.0	1
121.6	0028	5D8		0.0	1
125.1	0029	3G0		0.0	1
127.7	0030	3G0		0.0	1
128.5	0031	3G0		0.0	1
129.8	0032	4D45		0.0	1
131.3	0033	3G0		0.0	1
131.4	0034	3G4	->4L0	0.0	1
132.1	0035	4A4	->(4E4) DOWNHOLE	0.0	1
133.3	0036	5D8		0.0	1
133.6	0037	4A43	(4E4) 50:50	0.0	1
134.7	0038	3G41	->4L4	0.0	1
136.1	0039	4A0	84	0.0	1
136.5	0040	5D45		0.0	1
137.1	0041	4A0		0.0	1
137.6	0042	5D48		0.0	1
146.1	0043	5A62	(5D4*)(3G9)(5A19 ->4A0)	0.0	1
147.2	0044	3G1		0.0	1
152.6	0045	5D8	[5C8]	0.0	1
155.2	0046	5A62	(5A619)(3G9)	0.0	1
157.4	0047	5D8		0.0	1
160.9	0048	5B2	83	0.0	1
162.2	0049	5B6		0.0	1
163.1	0050	5B62		0.0	1
168.9	0051	5C6	[5D6] (5A6) 70:30	0.0	1

DDH: FAGA227 UTM-N: 905,275.0 UTM-E: 592,303.5 UTM-ELEV: 1,301.3 TOTAL DEPTH: 205.1 SECTION: W 80
RFE: S2 RFE DIR: 295 PLUNGE ANGLES: 11 312 DHD CALC: 1 SS CALC: 0

DEPTH	UNIT	CODE	DESC	RECOVERY	IND
182.6	0052	5C*	(5D*)(5B0)	0.0	1
200.9	0053	5B20		0.0	1
203.6	0054	5B20	(5D3) 70:30	0.0	1
205.1	0055	5B2	(5D3) MINOR	0.0	1

DDH: FAGA227 UTM-N: 905,275.0 UTM-E: 592,303.5 UTM-ELEV: 1,301.3 TOTAL DEPTH: 205.1 SECTION: W 80
RFE: S2 RFE DIR: 295 PLUNGE ANGLES: 11 312 DHD CALC: 1 SS CALC: 0

DDH	F DEPTH	T DEPTH	FEAT	SYMTRY	S0 ANGLE	S0 DIRECT	S1 ANGLE	S1 DIRECT	S2 ANGLE	S2 DIRECT	RFE CDE	DHDC	SDC	PROCESS
FAGA227	0.0	10.0	CS2		0	0	0	0	62	295	C	1	0	1
FAGA227	0.0	12.5	CS2		0	0	0	0	63	295	C	1	0	1
FAGA227	0.0	16.0	CS2		0	0	0	0	70	295	C	1	0	1
FAGA227	0.0	22.0	CS2		0	0	0	0	77	295	C	1	0	1
FAGA227	0.0	27.5	CS2		0	0	0	0	70	295	C	1	0	1
FAGA227	0.0	33.5	CS2		0	0	0	0	70	295	C	1	0	1
FAGA227	0.0	43.0	CS2		0	0	0	0	70	295	C	1	0	1
FAGA227	0.0	52.0	CS2		0	0	0	0	60	295	C	1	0	1
FAGA227	0.0	60.5	CS2		0	0	0	0	70	295	C	1	0	1
FAGA227	0.0	66.0	CS2		0	0	0	0	75	295	C	1	0	1
FAGA227	0.0	69.7	CS2		0	0	0	0	70	295	C	1	0	1
FAGA227	0.0	73.7	CS2		0	0	0	0	56	295	C	1	0	1
FAGA227	0.0	80.5	CS2		0	0	0	0	75	295	C	1	0	1
FAGA227	0.0	83.0	CS2		0	0	0	0	60	295	C	1	0	1
FAGA227	0.0	92.0	CS2		0	0	0	0	80	295	C	1	0	1
FAGA227	0.0	102.0	CS2		0	0	0	0	82	295	C	1	0	1
FAGA227	0.0	105.0	CS2		0	0	0	0	78	295	C	1	0	1
FAGA227	0.0	112.0	CS2		0	0	0	0	75	295	C	1	0	1
FAGA227	0.0	115.0	CS2		0	0	0	0	65	295	C	1	0	1
FAGA227	0.0	121.6	CS2		0	0	0	0	72	295	C	1	0	1
FAGA227	0.0	125.3	CS2		0	0	0	0	80	295	C	1	0	1
FAGA227	0.0	129.8	CS2		0	0	0	0	75	295	C	1	0	1
FAGA227	0.0	135.3	CS2		0	0	0	0	72	295	C	1	0	1
FAGA227	0.0	145.4	CS2		0	0	0	0	80	295	C	1	0	1
FAGA227	0.0	150.9	CS2		0	0	0	0	65	295	C	1	0	1
FAGA227	0.0	157.6	CS2		0	0	0	0	65	295	C	1	0	1
FAGA227	0.0	168.6	CS2		0	0	0	0	65	295	C	1	0	1
FAGA227	0.0	174.0	CS2		0	0	0	0	65	295	C	1	0	1
FAGA227	0.0	177.4	CS2		0	0	0	0	70	295	C	1	0	1
FAGA227	0.0	185.3	CS2		0	0	0	0	60	295	C	1	0	1
FAGA227	0.0	191.4	CS2		0	0	0	0	80	295	C	1	0	1
FAGA227	0.0	195.1	CS2		0	0	0	0	75	295	C	1	0	1
FAGA227	0.0	199.6	CS2		0	0	0	0	72	295	C	1	0	1
FAGA227	0.0	204.8	CS2		0	0	0	0	65	295	C	1	0	1

DDH: FAGA227 UTM-N: 905,275.0 UTM-E: 592,303.5 UTM-ELEV: 1,301.3 TOTAL DEPTH: 205.1 SECTION: W 80
RFE: S2 RFE DIR: 295 PLUNGE ANGLES: 11 312 DHD CALC: 1 SS CALC: 0

DDH	F DEPTH	T DEPTH	FEAT REC CD	PARLL	UPPER PLANE		INTERNAL PLANE		LOWER PLANE		DHD
FAGA227	19.0	20.3	G		77	0	0	0	0	3	1
FAGA227	50.6	51.5	G		0	0	60	0	0	3	1
FAGA227	68.4	68.6	G		70	0	0	0	0	3	1
FAGA227	71.4	72.7	G		70	0	0	0	0	3	1
FAGA227	85.2	88.8	G		80	0	0	0	0	3	1
FAGA227	90.0	90.2	G		0	0	0	0	0	3	1
FAGA227	93.3	93.5	G	S2	0	0	0	0	0	370	1
FAGA227	106.6	108.8	3G		0	0	0	0	0	370	1
FAGA227	125.1	127.7	G		45	0	0	0	80	0	1
FAGA227	128.3	128.4	G		0	0	75	0	0	0	1
FAGA227	128.4	128.8	D		0	0	0	0	0	0	1
FAGA227	133.6	134.7	X		0	0	0	0	0	0	1
FAGA227	137.6	145.1	3G		0	0	80	0	0	0	1
FAGA227	160.9	162.2	G		65	0	0	0	30	0	1
FAGA227	0.0	166.1	G		0	0	52	270	0	0	1
FAGA227	0.0	167.3	G		0	0	0	0	0	0	1
FAGA227	0.0	170.0	G		0	0	0	0	0	0	1
FAGA227	0.0	173.7	G		0	0	65	0	0	0	1
FAGA227	0.0	177.4	G		0	0	0	0	0	0	1
FAGA227	0.0	183.8	F		0	0	60	50	0	0	1
FAGA227	0.0	193.2	G		0	0	0	0	0	0	1
FAGA227	0.0	200.3	1G		0	0	45	0	0	0	1

CYPRUS ANVIL MINING CORPORATION Page 1 of 7

DIAMOND DRILL CORE LOG Date:

Hole Number: FAGA 227 (82A227)

Project: 1982 GRUM DRILL PROGRAM

Location: VANGORDA PLATEAU

Claim: Grum #3

~~Terr. Plane~~ UTM Co-ords.: 6,905,275.018 N (CAMC survey) 230°

592,303.482 E

Grid Co-ords: 80W

11N

Elevation: 1301.315 (CAMC survey)

Total Depth: 205.1 m (673')

Reference Fabric Orientation Diagram:

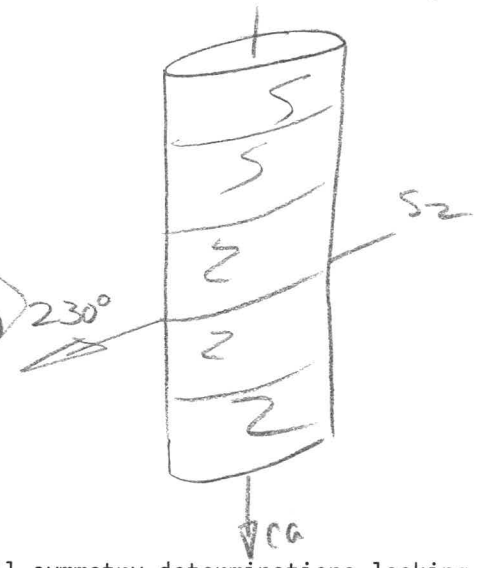

All symmetry determinations looking NW with S2 dipping SW with dip azimuth 230°.

Purpose: To Test F1 antiform on Main Hor ①.

Reason hole Terminated: bottomed in Vangorda Fm

Logged by: DSJ/GAJ Date(s) Logged: June 15 | 82

Drilling Contractor: ARCTIC DIAMOND DRILLING LTD.

CORE Size	From	To
NQ	9.1m	EOH
		44

Collar Cased and Capped: No

Hole Cemented: No

Steel down hole: No

Started: June 12/82 Completed: June 15/82

Cyprus Anvil Mining Corp. Page 2 of 7

DDH FAGA227 (2–8)

Diamond Drill Core Log Date: _____ Logged By: _____

Code	Drillhole	Elevation	Northing	Easting	Units (feet/metres)	R.F.E.
	2–8	10–16	17–24	25–32	34–39	41–42
T	FAGA227	1301.3	9052705.0	592303.5	metres	52

Code	Drillhole	Depth	Zenith Angle	True Azimuth	Comments
	2–8	10–14	22–26	28–32	34–56
R	FAGA227	00	180.0	0.0	AT COLLAR
R	FAGA227	192	179.0	303.0	SPERRY SUN SINGLE SHOT
R	FAGA227	741	178.0	133.0	
R	FAGA227	1350	177.8	143.0	
R	FAGA227	1960	175.0	133.0	

Code	Drillhole	Comments, Errant Remarks, Snivellings and / or Lewd Suggestions
	2–8	10–56

C.A.M.C. 1981-E-2

DDH EAGA227 (2–8) Cyprus Anvil Mining Corp. Page 3 of 7

Lithologic Log Date: 14 June 82 Logged By: GAT / DST

Code	From	To	Recov.	No.	Unit	Description
1	10–14	16–20	22–24	26–28	30–34	35
L	00	94		1	#	O/B, drillers lunches, frost, slump
L	94	190		2	5C*?3	5D*?3; 2 carbonate species; sequence heavily carbonated particularly @ base
L	190	203		3	5D3*	Gouge; minor 5B?; lower contact indeter., upper contact ≈ 11 S_2
L	203	277		4	5B?	grading downhole to 5B8 gen. w/ good lithon struct; gray to 22m then 5B8 w/ poor lithon struct
L	277	577		5	5C3*	(5D3*) v. complex assemblage of highly carbonated metavole. units; 56.6 – 51.5 = S_2 // gouge; from 56.3 – 57.7m see v. $CO_3^=$ rich margin
L	577	579		6	4B0	< 1%
L	579	629		7	4A0	
L	629	641		8	4D5H	→ changed to 4C5 on basis of assays lower grade
L	641	669		9	4D5H	higher grade
L	669	684		10	4A0	
L	684	686		11	4A0	(4C0) gouge; upper contact ≈ 11 S_2
L	686	714		12	4A0	
L	714	722		13	5A0	Gouge; upper 11 S_2, lower ≈ indeter. ±9
L	722	733		14	5A1	
L	733	756		15	4AH	(4A34)
L	756	776		16	4EH	(4F4)(4E45) 13–15% comb.
L	776	790		17	5C*	w/ "fuchsite"; heavily $CO_3^{=d}$ 776 – 78.0
L	790	792		18	4D4	
L	792	902		19	3G9	[5A6] gouge 88.2 – 85.8 upper ≈ 11 S_2 then steep over rest of interval; gouge 90.0 – 90.2
L	902	919		20	3G0	
L	919	935		21	5D*?	*= ank. note 5D banded texture; pale greens & buff in color; gouge 93.3 – 93.5 indeterminate
L	935	938		22	4L0	
L	938	1006		23	3G9	[5B02]
L	1006	1088		24	3G0	±9 gouge (5D*); sect. heavily but not entirely gouged; gouge fabric ⇒ ≈ 40° dip to fault ≤ steeper than S_2

DDH EAGA227 (2 8)

Cyprus Anvil Mining Corp.

Lithologic Log

Date: 14 June 82 Logged By: GAJ / DSJ

Code	From	To	Recov.	No.	Unit	Description
1	10 14	16 20	22 24	26 28	30 34	35
L	108 8	117 6		25	3G0	abundant OQO; "calc-silicatry" non-
						calc wkly po bands; $S_2 \approx 90$ $S_1 \approx 0$
L	117 6	118 9		26	5D*	[3B*] as unit 21
L	118 9	120 1			3G0	as #25
L	120 1	121 6		27	5D*	ankeritic
L	121 6	125 1		28	3G0	excell. lithon struct.
L	125 1	127 7		29	3G0	gouge; upper 45°/0; lower ∥ S_2
L	127 7	128 5		30	3G0	gouge @ base (10cm) ∥ S_2
L	128 4	128 8		31	4D45	siliceous bxia w/ sulfide frags; could
						be bxiated vein or ore material 4D45
L	128 8	131 3		32	3G0	
L	131 3	131 4		33	3G4	⇒ 4L0
L	131 4	132 1		34	4A4	(4E4) grades from 4A0 to 4E4 downhole (overturned)
L	132 1	133 3		35	5D*	ankeritic; few py-ZnS veins ∥ S_2
L	133 3	133 6		36	4A43	(4E4) 50:50
L	133 6	134 7		37	3G41	w/ py-ZnS veins (?) ≈ ∥ S_2 ⇒ 4L4 unit bxiated
L	134 7	136 1		38	4A0	±4
L	136 1	136 5		39	5D4*	dol.
L	136 5	137 1		40	4A0	
L	137 1	137 6		41	5D4*	ank
L	137 6	145 1		42	5A62	w/ interal S_2 foliaform gouge throughout
						5D4* @ 464'; minor 5A19 ⇒ 4A0
						@ top of interval; minor 3G9
L	145 1	147 2		43	3G1	
L	147 2	152 6		44	5D*	[5C*]; ankeritic
L	152 6	155 2		45	5A62	(5A619) (3G9)
L	155 2	157 4		46	5D*	ankeritic
528 L	157 4	160 9		47	5B2	±3 probable EOV
528 - 532 L	160 9	162 2		48	5B6	gouge upper ∥ S_2; internal 10° to ca.
532 - 535 L	162 2	163 1		49	5B62	lower 30°/000 w/ 30° rake to slicks
535 - 554 L	163 1	168 9		50	5C*	ank. [5D* ank], (5A6); gouge 166.1 - 166.15 545.0 -
						545.1 = faulted 5C*/5A contact w/ slicks
						down dip; fault = 52°/270°; gouge @ 549.0 167.3
						faulted 5D*/5A contact ∥ S_2 rel^ns
						⇒ thrust movement; 5C* = 70%
554 - 599 L	168 9	182 6		51	5C*	(5D*) (5B0); gouge @ 557 170.0 indeter. w/ sulfs.

lots of "fuchsite"; gouge @ 570 173.7 ∥ S_2 (small); 582' = 10cm gouge ∥ S_2 indeter.

177.4

C.A.M.C. 1981 - E-3

DDH FAGA 227 (2 – 8)

Cyprus Anvil Mining Corp.

Lithologic Log

Date: 15 June Logged By: GAJ/DSJ

	Code	From	To	Recov.	No.	Unit	Description
	1	10 – 14	16 – 20	22 – 24	26 – 28	30 – 34	35
599 – 659	L	1812 6	2009		52	5B20	w/ inc. $CaCO_3$ content downhole (up section?) fault @ 603' 60°/050 w/ drag suggesting normal movement E side down (if S_2 230°); gouge @ 634'; no huge gouges thru section 2cm gouge @ 657' 45°/00
659 – 668	L	2009	2036		53	5B210	(5D3) 5B2 = 70 5D = 30
668 – 673	L	2036	2051		54	5B21	v. minor (5D3)
							N.B. 5B2 omits above not 5A as not carbonaceous enough

C.A.M.C. 1981 – E-3

DDH EAGA227 (2 8)

Cyprus Anvil Mining Corp.

Structural Log

Date: 15 June 82 Logged By: GHT/DST

Code	From	To	Feature	Sym	S_0 Dip Direct.	S_1 Dip Direct.	S_2 Dip Direct	Description
1	10 14	16 20	22 24	26	28 32	34 38	40 44	
S		110	CS12				612 310	
S		125	CS12				63	
S		160	CS12				710	
S		220	CS12				717	
S		275	CS12				710	
S		335	CS12				710	
S		430	CS12				710	
S		520	CS12				610	
S		605	CS12				710	
S		660	CS12				715	
S		697	CS12				710	
S		737	CS12				516	
S		805	CS12				715	
S		830	CS12				610	
S		920	CS12				810	
S		1020	CS12				812	
S		1050	CS12				718	
S		1120	CS12				715	
S		1150	CS12				615	
S		1216	CS12				712	
S		1253	CS12				810	
S		1298	CS12				715	
S		1353	CS12				712	
S		1454	CS12				810	
S		1509	CS12				615	
S		1576	CS12				615	
S		1686	CS12				615	
S		1740	CS12				615	
S		1774	CS12				710	
S		1853	CS12				610	
S		1914	CS12				810	
S		1951	CS12				715	
S		1996	CS12				712	
S		2048	CS12				615	

DDH FAGA227 (2–8) Cyprus Anvil Mining Corp

Logged by GAT/DST

ASSAY LOG (SAMPLER'S COPY) Date 15 June 82 Sampled by G

CODE	FROM	TO	SAMPLE	INTR.	REC (m)	UNIT	DESCRIPTION
	10–14	16–20	22–26	28–30	32–34	36–40	42
P	579	604	12426	25	23	4AD	
P	604	629	12427	25	25	4AO	
P	629	641	12428	12	12	4D54	
P	641	655	12429	14	14	4D54	
P	655	669	12430	14	14	4D54	
P	669	700	12431	31	31	4AO	
P							
P	700	714	12433	14	14	4AO	
P	714	733	12434	19	19	5AO	
P	733	756	12435	23	23	4A4	
P	756	776	12436	20	20	4E4	
P	1314	1321	12437	07	07	4A4	
P	1347	1371	12438	24	23	4AO	

shit list closed.

DDH FAGA227 Cyprus Anvil Mining Corp. Page _____ of _____

2 Meters 8

Structural Log Date: _____ Logged By: _____

Code	From	To	Feature	Sym	S_0 Dip Direct.	S_1 Dip Direct.	S_2 Dip Direct	Description
	10 14	16 20	22 24	26	28 32	34 38	40 44	
F	1190	2036	G		77 000			
F	5056	5156	G			60 000		
F	6846	6866	G		70 000			
F	7146	7276	G		70 000			
F	8828	8886	G		80 000			most steeper than S$_2$
F	9000	9026	G					
F	9336	9356	G					
F	10666	10883	G					40° dip to fault (steeper than S$_2$)
F	12511	12777	G		45 000		80 000	
F	12833	12855	G			75 000		
F	12844	12887	D?					
F	13366	13477	X					
F	13776	14513	G			80 000		
F	16099	16226	G		45 RFE		30 000	30° rake to slicks, internal gouge ∆ 10° to CA
F		16611	G			52 270		slicks downdip
F		16736	G					
F		17006	G					
F		17376	G			65 RFE		
F		17746	G					
F		18386	F			60 050		E side down
F		19326	G					
F		20036	G			45 000		

C.A.M.C. 1981 - E - 4

DDH: FAGA227 -- 42 DEGREE PROFILE

(VIEW AZIMUTH = 312 DEGREES)

ELEV:1301 592304E ; 905275N

PLUNGE ANGLE IS 11.0 TREND ANGLE IS 312.0

CORRECTED COLLAR POSITION: X = 707.6 Z = 1302.5

SECTION NAME: 80W

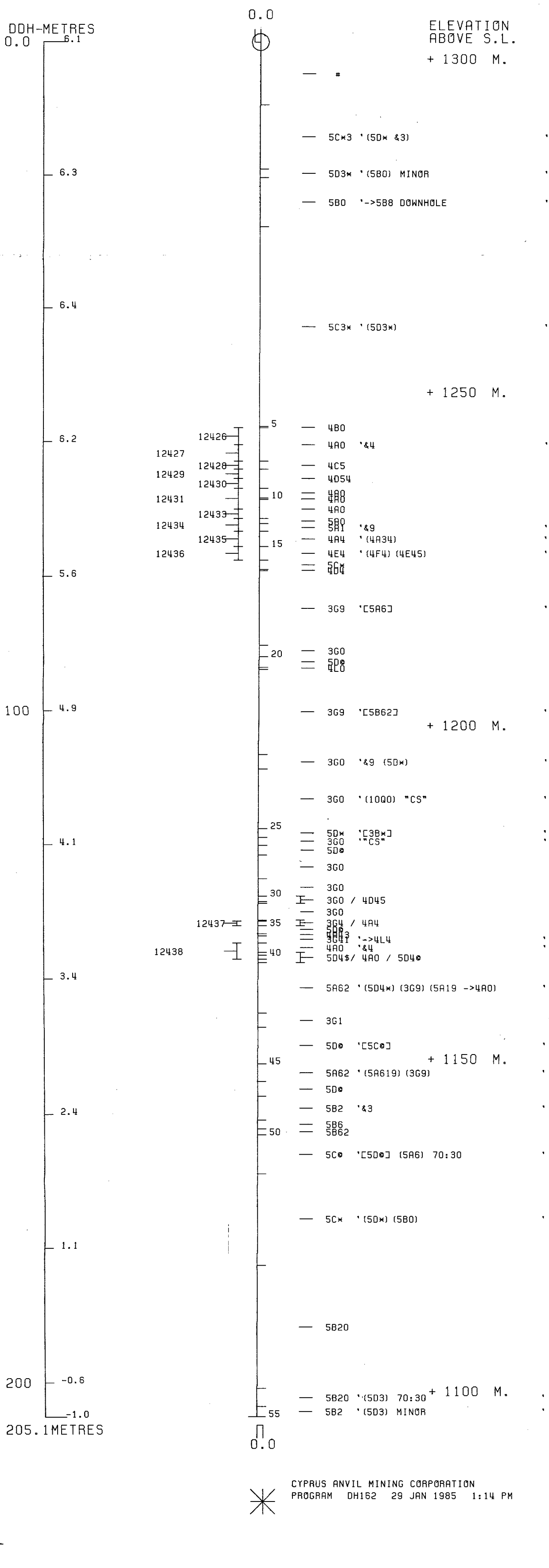

CYPRUS ANVIL MINING CORPORATION
PROGRAM DH162 29 JAN 1985 1:14 PM

DDH: FAGA227 -- 42 DEGREE PROFILE

(VIEW AZIMUTH = 312 DEGREES)

ELEV:1301 592304E ; 905275N

PLUNGE ANGLE IS 11.0 TREND ANGLE IS 312.0

CORRECTED COLLAR POSITION: X = 707.6 Z = 1302.5

SECTION NAME: 80W

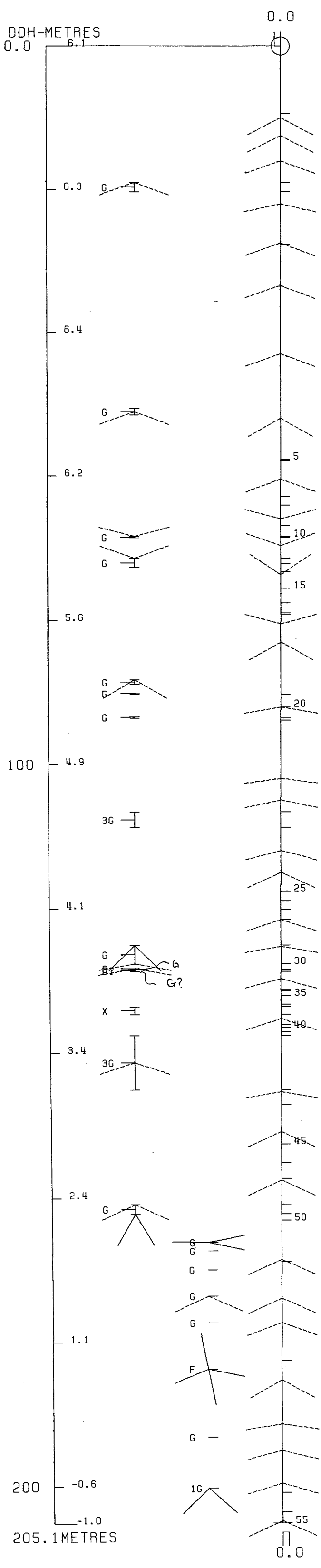

CYPRUS ANVIL MINING CORPORATION
PROGRAM DH161 30 JAN 1985 9:10 AM

FAGA234

DRILL HOLE	:	FAGA234
NORTHING	:	905,353.1
EASTING	:	592,307.8
ELEVATION	:	1,303.0
TOTAL DEPTH	:	165.0
SECTION	:	W 82
R.F.E.	:	S2
RFE DIRECTION:		230
PLUNGE ANGLE :		11
PLUNGE DIRECT:		312
DHD CALC:		1
SS CALC:		1

DETAIL RECORD COUNTS:

NOS ORE-SAMPLES:	13
NOS DOWN-H-SURVEYS:	4
NOS DOWN-H-LITHOLOGY:	68
NOS DOWN-H-STRUCTURE:	26
NOS DOWN-H-FAULTS:	31
NOS DOWN-H-SPLINES:	4
NOS COMPOSITES:	0

DDH: FAGA234 UTM-N: 905,353.1 UTM-E: 592,307.8 UTM-ELEV: 1,303.0 TOTAL DEPTH: 165.0 SECTION: W 82
RFE: S2 RFE DIR: 230 PLUNGE ANGLES: 11 312 DHD CALC: 1 SS CALC: 1

DEPTHS FROM	DEPTHS TO	SAMPLE NO.	INT.	REC.	ROCK UNIT	ASSAYS S.G. PULP	CU %	PB %	ZN %	AG(AA) G/MT	AG(FA) G/MT	AU(FA) G/MT	PO %	PY %	TOT FE %	BAO %	HG %	MN %	AS %	BA %	S.G. W.R.
76.6	79.1	12690	2.5	2.5	4E4	4.33	.01	1.65	5.42	28.99		.89	2	30	32						
79.8	80.1	12691	.3	.3	4E4		.02	3.70	7.91	56.99											
83.7	84.0	12692	.3	.3	4E0		.02	.83	1.62	17.00											
84.0	86.9	12693	2.9	2.3	4A0		.02	.93	1.55	18.00											
86.9	89.1	12694	2.2	2.2	4E0	3.74	.05	7.63	13.50	134.00		1.16	2	12	15						
91.1	91.8	12695	.7	.5	4D4		.02	5.16	9.30	115.99											
96.3	98.1	12696	1.8	1.4	4DA	3.45	.08	3.89	5.07	57.99		1.30	2	14	16						
103.8	105.0	12697	1.2	1.1	4DE4	4.08	.10	8.10	15.19	127.99		.95	3	17	20						
105.0	107.5	12698	2.5	2.5	4DA	3.02	.02	1.89	4.98	29.99		.40	3	3	6						
110.4	112.6	12699	2.2	1.8	4D4	3.56	.05	7.41	11.00	152.00		.55	6	5	11						
112.6	114.6	12700	2.0	2.0	4A0	3.02	.02	1.65	2.91	30.99		.62	5	2	7						
120.6	125.0	12701	4.4	1.9	4A0	3.06	.02	.64	1.24	15.99		.20	1	7	9						
125.5	128.2	12702	2.7	2.7	4A4	2.91	.02	3.12	2.91	33.00		.47	1	1	3						
WEIGHTED AVERAGE																					
76.6	79.1		2.5	2.5		4.33	.01	1.65	5.42	28.99		.89	2	30	32						
79.8	80.1		.3	.3			.02	3.70	7.91	56.99											
83.7	89.1		5.4	4.8		1.52	.03	3.66	6.42	65.20		.47		5	6						
91.1	91.8		.7	.5			.02	5.16	9.30	115.99											
96.3	98.1		1.8	1.4		3.45	.08	3.89	5.07	57.99		1.30	2	14	16						
103.8	107.5		3.7	3.6		3.36	.04	3.91	8.29	61.78		.58	3	8	11						
110.4	114.6		4.2	3.8		3.30	.04	4.67	7.14	94.38		.58	5	3	9						
120.6	125.0		4.4	1.9		3.06	.02	.64	1.24	15.99		.20	1	7	9						
125.5	128.2		2.7	2.7		2.91	.02	3.12	2.91	33.00		.47	1	1	3						

DDH: FAGA234 UTM-N: 905,353.1 UTM-E: 592,307.8 UTM-ELEV: 1,303.0 TOTAL DEPTH: 165.0 SECTION: W 82
RFE: S2 RFE DIR: 230 PLUNGE ANGLES: 11 312 DHD CALC: 1 SS CALC: 1

DEPTH	ZENITH	AZIMUTH
0.000	180.000	0.000
36.900	177.000	143.000
97.800	164.500	129.000
158.800	161.000	113.000

DDH: FAGA234 UTM-N: 905,353.1 UTM-E: 592,307.8 UTM-ELEV: 1,303.0 TOTAL DEPTH: 165.0 SECTION: W 82
RFE: S2 RFE DIR: 230 PLUNGE ANGLES: 11 312 DHD CALC: 1 SS CALC: 1

DEPTH	UNIT	CODE	DESC	RECOVERY	IND
11.4	0001	#			
15.0	0002	5C$		0.5-	1
15.7	0003	5B96	(10Q0)	0.5-	1
18.9	0004	5C$		0.5-	1
19.9	0005	5B68	(10Q0)	0.5-	1
20.5	0006	5B26	&$	0.5-	1
22.5	0007	5D0	&6 ->5B86	0.5-	1
23.4	0008	5C*		0.5-	1
24.5	0009	5B$@	&6	0.5-	1
26.8	0010	5D0	&6 &$ (5C$)	0.5-	1
29.5	0011	5A0		0.5-	1
31.8	0012	5B20	&$ (5D4$)	0.5-	1
43.6	0013	5A19	$ (4A0)	0.5-	1
45.4	0014	5C4$	(5B26)(5A6) 70:30	0.5-	1
52.7	0015	5A$	(5A6)(5C$4) 98:02	0.5-	1
54.1	0016	5B2*	&0	0.5-	1
55.3	0017	5B*4		0.5-	1
58.3	0018	5B$	&2 (5D4$) 75:25	0.5-	1
60.1	0019	5D4*	[5C4*]	0.5-	1
62.2	0020	5B2$		0.5-	1
64.2	0021	5A0	(5B0) GOUGE	0.5-	1
66.6	0022	5B2	&$ (5D$) &BXA	0.5-	1
67.6	0023	5A19	&*	0.5-	1
76.6	0024	5A19	&$ ->4A0	0.5-	1
79.1	0025	4E4	(4A3)(4D4) 80:10:10	0.5-	1
79.8	0026	4A$	->5A19	0.5-	1
80.1	0027	4E4		0.5-	1
83.7	0028	4A$		0.5-	1
84.0	0029	4E0	&5	0.5-	1
86.9	0030	4A0		0.5-	1
89.1	0031	4E4	(4D4)(4A4)	0.5-	1
91.1	0032	5C$	[5D$]	0.5-	1
91.8	0033	4D4		0.5-	1
96.3	0034	5D$	(4D4)(4E4) 95:05	0.5-	1
97.5	0035	4D4		0.5-	1
98.1	0036	4A3	(5D4$) 80:20	0.5-	1
103.4	0037	5D4$	(4A0)(4D4) 70:30	0.5-	1
103.8	0038	5A6		0.5-	1
105.0	0039	4D4	(4E4)	0.5-	1
106.1	0040	4A0	->5A19*	0.5-	1
107.5	0041	4D4	(4A0)(5D4*) 60:20:20	0.5-	1
110.4	0042	5D4$	(4D4)(4E4) 85:15	0.5-	1
114.6	0043	5D4*	(4J*)(4D4)(4A4)(4A0)	0.5-	1
119.8	0044	5A$		0.5-	1
120.6	0045	5D4$	[5C$]	0.5-	1
121.1	0046	4E0		0.5-	1
125.0	0047	4A0		0.5-	1
125.5	0048	5D4*	(4D0) 50:50	0.5-	1
128.2	0049	4A4	(5D4*) 95:05	0.5-	1
128.7	0050	5A6		0.5-	1
130.4	0051	5B26		0.5-	1

DDH: FAGA234 UTM-N: 905,353.1 UTM-E: 592,307.8 UTM-ELEV: 1,303.0 TOTAL DEPTH: 165.0 SECTION: W 82
RFE: S2 RFE DIR: 230 PLUNGE ANGLES: 11 312 DHD CALC: 1 SS CALC: 1

DEPTH	UNIT	CODE	DESC	RECOVERY	IND
131.8	0052	5C4*		0.5-	1
137.9	0053	5B20	&8(5B6&8)(5C*4)(5DO)60:20:15:5	0.5-	1
139.8	0054	5F0	(5CO)(5DO) 75:10:15	0.5-	1
140.3	0055	5C4$		0.5-	1
141.0	0056	5DO		0.5-	1
143.6	0057	5B80	(5DO &*)	0.5-	1
144.0	0058	5DO		0.5-	1
147.0	0059	5B28	&O	0.5-	1
147.9	0060	5DO		0.5-	1
152.9	0061	5B28	&O [&6] (10QO) 85:15	0.5-	1
153.7	0062	5D4$		0.5-	1
154.3	0063	5D4*	(5B2*)	0.5-	1
154.7	0064	5D4$		0.5-	1
156.2	0065	5B8	&O	0.5-	1
156.7	0066	5B26		0.5-	1
158.2	0067	5DO	(5B8)	0.5-	1
165.2	0068	5BO	&8 &2 (5DO) MINOR	0.5-	1

DDH: FAGA234 UTM-N: 905,353.1 UTM-E: 592,307.8 UTM-ELEV: 1,303.0 TOTAL DEPTH: 165.0 SECTION: W 82
RFE: S2 RFE DIR: 230 PLUNGE ANGLES: 11 312 DHD CALC: 1 SS CALC: 1

DDH	F DEPTH	T DEPTH	FEAT	SYMTRY	S0 ANGLE	S0 DIRECT	S1 ANGLE	S1 DIRECT	S2 ANGLE	S2 DIRECT	RFE CDE	DHDC	SDC	PROCESS
FAGA234	0.0	15.8	PS2	P	0	0	0	0	50	230	0	1	1	1
FAGA234	0.0	24.3	CS2		0	0	0	0	60	230	0	1	1	1
FAGA234	0.0	28.3	PS2	P	0	0	0	0	75	230	0	1	1	1
FAGA234	0.0	35.8	CS2	D	0	0	0	0	60	230	0	1	1	1
FAGA234	0.0	41.3	CS2	D	0	0	0	0	60	230	0	1	1	1
FAGA234	0.0	46.8	PS2	P	0	0	0	0	45	230	0	1	1	1
FAGA234	0.0	53.9	PS2	P	0	0	0	0	35	230	0	1	1	1
FAGA234	0.0	57.3	PS2	P	0	0	0	0	50	230	0	1	1	1
FAGA234	0.0	65.3	PS2	P	0	0	0	0	60	230	0	1	1	1
FAGA234	0.0	69.0	CS2		0	0	0	0	75	230	0	1	1	1
FAGA234	0.0	75.9	CS2		0	0	0	0	58	230	0	1	1	1
FAGA234	0.0	81.7	CS2		0	0	0	0	65	230	0	1	1	1
FAGA234	0.0	89.2	PS1	P	0	0	0	0	60	230	0	1	1	1
FAGA234	0.0	93.3	PS1	P	0	0	0	0	60	230	0	1	1	1
FAGA234	0.0	102.2	PS1	P	0	0	0	0	65	230	0	1	1	1
FAGA234	0.0	106.8	PS1	P	0	0	0	0	64	230	0	1	1	1
FAGA234	0.0	113.9	PS1	P	0	0	0	0	50	230	0	1	1	1
FAGA234	0.0	118.8	CS2		0	0	0	0	70	230	0	1	1	1
FAGA234	0.0	125.2	PS1	P	0	0	0	0	52	230	0	1	1	1
FAGA234	0.0	129.0	CS2		0	0	0	0	65	230	0	1	1	1
FAGA234	0.0	136.0	CS2		0	0	0	0	75	230	0	1	1	1
FAGA234	0.0	143.9	CS2		0	0	0	0	72	230	0	1	1	1
FAGA234	0.0	146.4	CS2		0	0	0	0	65	230	0	1	1	1
FAGA234	0.0	155.1	CS2		0	0	0	0	69	230	0	1	1	1
FAGA234	0.0	159.4	CS2		0	0	0	0	52	230	0	1	1	1
FAGA234	0.0	164.3	CS2		0	0	0	0	55	230	0	1	1	1

170CT83 GRUM

DOWN-HOLE FAULTS (DH020)

DDH: FAGA234 UTM-N: 905,353.1 UTM-E: 592,307.8 UTM-ELEV: 1,303.0 TOTAL DEPTH: 165.0 SECTION: W 82
RFE: S2 RFE DIR: 230 PLUNGE ANGLES: 11 312 DHD CALC: 1 SS CALC: 1

DDH	F DEPTH	T DEPTH	FEAT	REC CD	PARLL	UPPER PLANE		INTERNAL PLANE		LOWER PLANE		DHD
FAGA234	16.7	18.9	1G			0	0	99	999	0	0	1
FAGA234	22.5	23.4	B1G			0	0	99	999	0	0	1
FAGA234	25.8	26.9	B1F	5		0	0	0	0	0	0	1
FAGA234	28.8	29.5	G3F			0	0	99	999	0	0	1
FAGA234	32.8	35.4	GBX			0	0	0	0	0	0	1
FAGA234	45.9	48.4	3BG			0	0	99	999	0	0	1
FAGA234	48.4	54.1	B1G			0	0	0	0	0	0	1
FAGA234	58.3	59.5	B			0	0	0	0	0	0	1
FAGA234	59.5	60.0	G			0	0	99	999	0	0	1
FAGA234	60.1	62.2	B2G			0	0	99	999	0	0	1
FAGA234	62.2	64.2	G			0	0	0	0	99	999	1
FAGA234	64.2	66.6	BXG			0	0	0	0	0	0	1
FAGA234	66.6	67.6	GX			0	0	99	999	0	0	1
FAGA234	85.0	85.6	BPG			0	0	0	0	0	0	1
FAGA234	85.6	86.8	BPG			0	0	99	999	0	0	1
FAGA234	96.3	97.5	B	3		0	0	0	0	0	0	1
FAGA234	98.1	103.4	3BG	5		0	0	0	0	0	0	1
FAGA234	0.0	103.5	G			0	0	99	999	0	0	1
FAGA234	110.4	114.6	3B			0	0	0	0	0	0	1
FAGA234	121.1	121.8	NP			0	0	0	0	0	0	1
FAGA234	121.8	125.0	3BP			0	0	0	0	0	0	1
FAGA234	125.5	128.2	X			0	0	0	0	0	0	1
FAGA234	128.2	128.4	G			0	0	99	999	0	0	1
FAGA234	140.3	141.0	1GB			0	0	99	999	0	0	1
FAGA234	141.6	142.0	GB			0	0	99	999	0	0	1
FAGA234	142.2	142.3	GB			0	0	99	999	0	0	1
FAGA234	142.7	142.8	GB			0	0	99	999	0	0	1
FAGA234	143.0	143.3	GB			0	0	99	999	0	0	1
FAGA234	144.0	147.0	1G			0	0	99	999	0	0	1
FAGA234	151.5	152.1	G			99	999	0	0	0	0	1
FAGA234	153.7	154.3	G3F			99	999	0	0	99	999	1

DDH: FAGA234 UTM-N: 905,353.1 UTM-E: 592,307.8 UTM-ELEV: 1,303.0 TOTAL DEPTH: 165.0 SECTION: W 82
RFE: 52 RFE DIR: 230 PLUNGE ANGLES: 11 312 DHD CALC: 1 SS CALC: 1

DDH	SEGMENT NOS	COND INDICATOR
FAGA234	1	2
FAGA234	2	2
FAGA234	3	2
FAGA234	4	1

82W

CYPRUS ANVIL MINING CORPORATION

DIAMOND DRILL CORE LOG

Date: 20 July 82

Hole Number: FAGA 234

Project: grum

Location: Vangorda Plateau

Claim: Grum #2

UTM ~~Terr.~~Plane Co-ords.: 6905353.140 N

CAMC Mine Survey 592307.840 E

Grid Co-ords: 82W

13N

CAMC Mine Survey Elevation: ~~1304 m~~ 1302.975

Total Depth: 542' (165.2 m)

Reference Fabric Orientation Diagram:

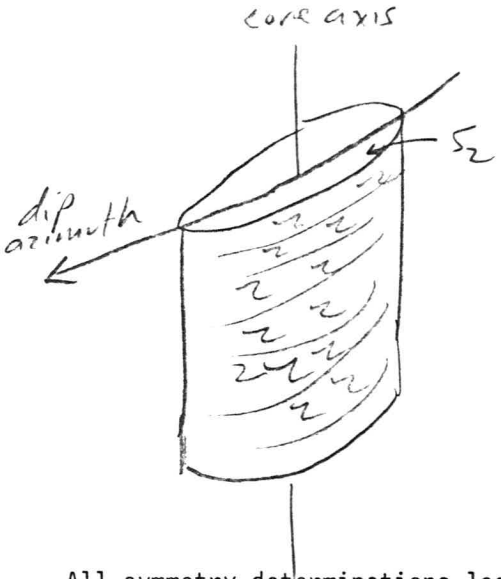

All symmetry determinations looking

NW with S_2 dipping

SW with dip azimuth 230. (was 295° in 1982)

Purpose: to test northeast extent of F_1 steep limb of Gnomes cap

Reason hole Terminated: tested target penetrated Bankruptcy Break bottomed in Green Eggs + Hm mbr of EQ

Logged by: DSJ/GAJ

Date(s) Logged:

Drilling Contractor: Arctic DD

Size	CORE From	To
NW	0	32'
NQ	32'	542'

Collar Cased and Capped: No

Hole Cemented: no

Steel down hole: none.

Started: 2 July 82 Completed: 4 July 82

Cyprus Anvil Mining Corp.

DDH FAGA234 (2 / 8)

Diamond Drill Core Log Date: _____ Logged By: GAJ/DSJ

Code	Drillhole	Elevation	Northing	Easting	Units (feet/metres)	R.F.E.	
1	2 8	10 16	17 24	25 32	34 39	41 42	
T	FAGA234	1303.0	9105353.1	592307.8	METERS	SZ	

Code	Drillhole	Depth	Zenith Angle	True Azimuth	Comments
1	2 8	10 14	22 26	28 32	34 56
R	FAGA234	9990	189.0	999.0	AT COLLAR
R	FAGA234	1369	177.0	143.0	
R	FAGA234	1978	164.5	129.0	
R	FAGA234	1588	161.0	113.0	

Code	Drillhole	Comments, Errant Remarks, Snivellings and / or Lewd Suggestions
1	2 8	10 56

DDH FAGA234 (2–8)

Cyprus Anvil Mining Corp.

Lithologic Log

Date: 6 July 82 Logged By: DSJ > GJ

Code	From	To	Recov.	No.	Unit	Description
1	10–14	16–20	22–24	26–28	30–34	35
L	00	114		1	*	underburden
L	114	150		2	5C*	dolo. mottled texture
L	150	157		3	5B86	(0,00) unit weakly banded trans in part to
						5D6
L	157	189		4	5C*	dolo chl mottled on S_2 - minor S_2 ∥ gouge 18.7-18.9
L	189	199		5	5B68	(0,00) not identical to 3G8 in 456-75-06 & 07
						since has relict lithons.
L	199	205		6	5B26	±* dolo. unit well bedded no grading seen.
						minor cog lithons incipient post D_2 cren
						foln.
L	205	225		7	5D0	±6 → 5B86 well banded - poor to weakly
						tev. lithon struct.
L	225	234		8	5C*	broken incip. gouge ∥ S_2 throught
L	234	245		9	5B*	±6 dol. + ank
L	245	288		10	5D0	±6±* dolo (5C* dol) zone of heavily broken core
						25.8 - 26.9 ~ 50% recovery no gouge -
						minor fault
L	288	295		11	5A0	entire unit gouged ∥ S_2 - major fault
L	295	318		12	5B20	±*(5D4* dol.)
L	318	436		13	5A19	* dolo. (4A0) 4A0 at 33.4 - 33.8 and
						37.9 - 38.4 zone of gouge and
						broken core from 32.8 - 35.4 S_2 ∥
						gouge at top of interval but unreliable
						due to broken core - lower cont ind. minor
						bnc at 33.4 probably not a major
						fault zone
L	436	454		14	5C4*	dolo (5B26)(5A6) 70, 30 for others. "fuch" in 5C
L	454	527		15	5A*	dolo. (5A6)(5C*4 dolo) = 2% of interval interval
						badly broken much S_2 ∥ gouge heaviest
						at 45.9 - 48.4 internal fabric suggests
						S_2 ∥ fault - only minor fault?
L	527	541		16	5B2*	±0 minor lithon structure & S_2 ∥ gouge.
L	541	553		17	5B*4	rock is light buff grey thinly to laminarly
						banded - pervasively foliated with characteristic
						light grey micac folia bounding heavily
						carbonated layers - heavily cross fractured

DDH FAGA234 (2–8)

Cyprus Anvil Mining Corp.

Lithologic Log

Date: 6 July 82 Logged By: DSJ / GAJ

Code	From	To	Recov.	No.	Unit	Description
1	10–14	16–20	22–24	26–28	30–34	35
						with py bearing hairline veinlets –
						suspect unit is carbonated 5B or 5B*
						as seen below.
L	55 3	58 3	1	18	5B*	±2 dolo (5D4*) fuch 75:25 unit very
						similar to above with dolo. rich
						S_2 folia bounded by carbonate stripes
						(making it darker) – locally very
						similar
L	58 3	60 1		19	5D4*	[5C4*] interval broken throught
						S_2 ∥ gouge zone from 59.5–60.0
L	60 1	62 2		20	5B2*	dolo. entire unit broken and imp. S_2 ∥
						gouge with many 1–5 cm gouge zones
						throught – last 2 units in hanging
						wall of major fault below
L	62 2	64 2		21	5A0	(5B0) GOUGE – entire interval fe-brickes
						gouge upper ind. lower ~∥ S_2
L	64 2	66 6		22	5B2	±* (5D* dolo) ±bxa throught interval.
						unit moderately broken – numerous S_2 ∥
						gouges. and large amounts of bxa.
						of mosaic or crackle type.
L	66 6	67 6		23	5A19	±* with much S_2 ∥ gouge and bxa.
L	67 6	76 6		24	5A19	±* dolo → 4A0 shifty – 4A at 74.2–74.4
✓ L	76 6	79 1		25	4E0	(4A3)(4D4) 50 40 10 4–5% PbZn mainly
						at top. from top to bottom 76.6–76.9 = 4A3
						76.9–77.2 = 4F4 77.2–77.6 = 4D4 77.6–77.9 = 4A3
						77.9–79.1 4E0 barren
no split L	79 1	79 8		26	4A*	dolo → 5A19 dolo bands contain finely xln
						py ∞ minor sphal + gal <1% PbZn – distinctive
						banded appearance.
✓ L	77 8	80 1		27	4E4	well banded good grade 12–14% PbZn
						may be same unit as 4E4 above.
no split L	80 1	83 7		28	4A*	dolo – 8% + dol. bands with coarsely xln
						essentially no sphal or gal – similar
						but not identical to unit 26 –
						10 cm 4J band at 81.6–81.7
✓ L	83 7	84 0		29	4F4	±5 similar to above also similar to 4F4 from

DDH FAGA234 (2–8)

Cyprus Anvil Mining Corp.

Lithologic Log

Date: 6 July Logged By: DSJ/GAJ

Code	From	To	Recov.	No.	Unit	Description
1	10–14	16–20	22–24	26–28	30–34	35
						Madasgar 4-5% PbZn
L	840	869		30	4A0	heavily broken incip bxn many gouge mainly
						S_2 ∥ where intact 2-3% PbZn (0Q0)
						zones of broken core & poor recov 85.0-85.6
						and 86.3-86.8 (w. S_2 ∥ gouge) probable minor
						fault
L	869	891		31	4E4	(4D4)(4A4) crude anvil cycle but not perfect. 12-13% PbZn
						86.9-87.9 = 4E 87.9-88.4 = 4D4
						88.4-89.9 = 4A4 89.7-89.9 = 4D4 margin
						to 5C below. (Mosquitoes biting & rx chewing badly)
L	891	911		32	5C*	dolo [5D*] unit remarkably intact.
L	911	918		33	4D4	10% PbZn.
L	918	963		34	5D*	dolo. (4D4)(4E4) 95:5 - sulfs as thin bands in 5D
						∥ S_2 (1-3cm thick) from 94.6-95.2
L	963	975		35	4D4	core broken throughout significant core
						loss as <.4 m recovered. 9-10% PbZn but
						low grade could be washed away
L	975	981		36	4A3	(5D4*) dol. 80:20 2-3% PbZn
L	981	1034		37	5D4*	dolo. (4A0)(4D4) 70:30 av 1-2% but
						sulf bands high grade - interval completely
						broken - small lumps of gouge - everything
						is ind. -2.5-3 m recovery over interval
L	1034	1038		38	5A6	3 cm S_2 ∥ gouge in middle of unit
L	1038	1050		39	4D4	(4E4) 15% PbZn may
						be same as unit 31 but ?
L	1050	1061		40	4A0	→ 5A19* unit largely intact
L	1061	1075		41	4D4	(4A0)(5D4*) 60:20:20 7% PbZn
						unit intact
L	1075	1104		42	5D4*	dol (4D4)(4E4) 85:15 (5D 5=) 2-3% PbZn
						by dilution 108.9-109.5 zone containing
						sulfides
L	1104	1146		43	5D4*	(4J*)(4D4)(4A4)(4A0) interval heavily broken
						some core loss - complex interbanding
						110.4-110.9 = 4J, 110.9-111.2 = 5D4*, 111.2-112.6 = 4D4,
						112.6-113.0 = 5D4*, 113.0-113.4 = 4A4, 113.4-113.6 = 5D4*
						113.6-113.9 = 4A0, 113.9-114.6 = 5D4* 6-8% PbZn

check 110.9 111.2 5D or 4D

but very heterog ~50/50 5D/5=

DDH FAGA234 (2–8)

Cyprus Anvil Mining Corp.

Lithologic Log

Date: 6 July 82 Logged By: DSJ/GAS

Code	From	To	Recov.	No.	Unit	Description
	10–14	16–20	22–24	26–28	30–34	35
L	114 6	119 8		44	SA*	dolo. unit remarkably intact for this lithology - 119.
L	119 8	120 6		45	SD4*	[SC*] dolo
L	120 6	121 1		46	4E0	
L	121 1	125 0		47	4A0	interval entirely broken - no core recovery 121.1-121.8 = mud seam - <1m core recovery over interval - major fault? no attitudes possible 1-2% but???
L	125 0	125 5		48	SD4*	(400) as margins above and below - mil grade overall. 50:50 = 5D/S=
L	125 5	128 2		49	4A0	broad (SD4*) 95:5 <5% Pb Zn
L	128 2	128 7		50	SA6	S_2 11 gouge 128.2-128.4
L	128 7	130 4		51	SB26	
L	130 4	131 8		52	SC4*	highly carbonated - light pinkish grey beige color - lacks notable chlorite
L	131 8	137 9		53	SB20	±8 (SB6 ±8) (SC*4) (SDO) 60:25:15 : 2-5
L	137 9	139 8		54	SF0	(SCO) (SDO) 75 : 10 : 15
L	139 8	140 3		55	SC4*	dolo
L	140 3	141 0		56	SD0	incip. gouge 11 S_2 throughout interval - broken core.
L	141 0	143 6		57	SB80	(SDO ±*) entire interval broken and gouged mainly 11 S_2 major gouges at: 141.6-142.0 142.2-142.3 142.7-142.8 143.0-143.3 core is rubbish
L	143 6	144 0		58	SD0	finally a recognizable unit
L	144 0	147 0		59	SB28	±0 minor incip S_2 11 gouge - unit generally intact
L	147 0	147 9		60	SD0	typical SDO - almost only typical unit in this entire sequence of greenish gouge
L	147 9	152 9		61	SB28	±0 ±67 (ODO) 5% major gouge at 151.5-152.1 upper 11 S_2 lower ind.
L	152 9	153 7		62	SD4*	unit light green weakly dolomitic but creamy colored massive CO_3 last .<1m
L	153 7	154 3		63	SD4*	gouge (SB2*) gouge upper 11 S_2 lower 11 S_2 = major fault

DDH EAGA234 (2 / 8)

Cyprus Anvil Mining Corp.

Lithologic Log

Date: 6 July 82 Logged By: DSJ/GS

Code	From	To	Recov.	No.	Unit	Description
1	10 14	16 20	22 24	26 28	30 34	35
L	1543	1547		64	SD4*	dolo
L	1547	1562		65	SB8	±0 rock pervasively foliated medium grey green - unit of uncertain protolith
L	1562	1567		66	SB26	
L	1567	1582		67	SD0	(SB8)
	1582	1652		68	SBP	±8 ±2 (SD0) very minor
						General comment on interval from 131.8 to 165.2 : Block unit subdivision very tenuous and difficult with only SD SF and SD4* being comfortably identified. Rocks very fine med green - grey green / black - very difficult to subdivide in meaningful and consistent fashion. Entire unit could happily be lumped as either mixed assemblage of meta volcanic and metasedimentary interbands of similar composition or entire package has undergone some alteration best attempt at subdivision given above but may very due to operator bias - This is definitely EOy but not normal rocks for that formation - not very different from EOy at top of hole! may be related to 3BS problem in 456-75-07 and could be related to 3A problem at Faro - where 3A ≠ good calc. sils. good meta volcs etc just observe chloritic ex.

C. A. M. C. 1981 – E-3

DDH FAGA234 (2–8)

Cyprus Anvil Mining Corp.

Structural Log

Date: 16 July 82 Logged By: GAT/DSJ

Code (1)	From (10–14)	To (16–20)	Feature (22–24)	Sym (26)	S_0 Dip (28–32)	S_0 Direct.	S_1 Dip (34–38)	S_1 Direct.	S_2 Dip (40–44)	S_2 Direct	Description
S		158	IND	P					50	295	not 230°
S		243	CS2						60		
S		283	IND	P					75		
S		358	IND	D					60		
S		413	IND	D					60		
S		468	IND	P					45		
S		539	IND	P					35		
S		573	IND	P					50		
S		653	IND	P					60		
S		690	CS2						75		
S		759	CS2						58		
S		817	CS2						65		
S		892	RS1				60	000			S_2 not dwel ∴ no DLA for S_1
S		933	RS1				60	000			"
S		1022	RS1				65	000			"
S		1068	RS1				64	000			"
S		1139	RS1				50	000			S_2 = 90° ∴
S		1188	CS2						70		
S		1252	RS1				52	000			close to S_2
S		1290	CS2						65		
S		1360	CS2						75		
S		1438	CS2						72		
S		1464	CS2						65		
S		1551	CS2						69		
S		1594	CS2						52		
S		1643	CS2						55		

S_2 [illegible]

DDH FAGA234 Cyprus Anvil Mining Corp

Page 9 of 9

Logged by DSJ/CAJ

ASSAY LOG (SAMPLER'S COPY)

Date 13 July 82 Sampled by

CODE	FROM	TO	SAMPLE	INTR.	REC (m)	UNIT	DESCRIPTION
1	10 14	16 20	22 26	28 30	32 34	36 40	42
P	766	791	12690	25	25	4FP	(4A3)(4D4)
P	798	801	12691	03	03	4F4	
P	837	840	12692	03	03	4F4	±5
P	840	869	12693	29	23	4AP	
P	869	891	12694	22	22	4F4	(4D4)(4A4)
P	911	918	12695	07	05	4D4	
P	963	981	12696	17	14	4D4	(4A3
~~P~~	~~9[illegible]~~	~~98[illegible]~~		~~26~~		~~4A3~~	
P	1038	1050	12697	12	11	4D4	
P	1050	1075	12698	25	25	4AQ	(4D4)(5D4*)
~~P~~	~~1075~~	~~1104~~		~~29~~		~~5D4*~~	~~dol (4D4)(4E4) 15% [illegible]~~
P	1104	1126	12699	22	18	4D4	(5D4*)(4J)
P	1126	1146	12700	20	20	4A4	(5D4*)(4A0)
P	1206	1250	12701	44	19	4A0	(4F0) very poor recov
P	1255	1252	12702	27	27	4A0	(5D4*)

DDH FAGA234 (2 8)

Cyprus Anvil Mining Corp.

Structural Log

Page _____ of _____

Date: _____ Logged By: _____

Code	From	To	Feature	Sym	S_0 Dip Direct.	S_1 Dip Direct.	S_2 Dip Direct	Description
1	10 14	16 20	22 24	26	28 32	34 38	40 44	
	187	189	1G			11S2		
	225	234	B1G			11S2		
	258	269	B1F	S				
	258	295	G3F			11S2		
	328	354	GBX					
	459	484	3BG			11S2		
	484	541	B1G					
	583	595	B					
	595	600	G			11S2		
	601	622	B2G			11S2		
	622	642	G				11S2	
	642	666	BXG					
	666	676	GX			11S2		
	850	856	BPG					
	856	868	BPG			11S2		
	963	975	B	3				
	981	1034	3BG	S				
		1035	G			11S2		
	1104	1146	3B					
	1211	1218	NP					
	1218	1250	BP					
	1255	1282	X					
	1282	1284	G			11S2		
	1403	1410	1GB			11S2		
	1416	1420	GB			11S2		
	1422	1423	GB			11S2		
	1427	1428	GB			11S2		
	1430	1433	GB			11S2		
	144	147	1G			11S2		
	1515	1521	G		11S2			
	1537	1543	G3F		11S2		11S2	

DDH: FAGA234 -- 42 DEGREE PROFILE

(VIEW AZIMUTH = 312 DEGREES)

ELEV:1303 592308E ; 905353N

PLUNGE ANGLE IS 11.0 TREND ANGLE IS 312.0

CORRECTED COLLAR POSITION: X = 768.5 Z = 1313.8

SECTION NAME: 80W

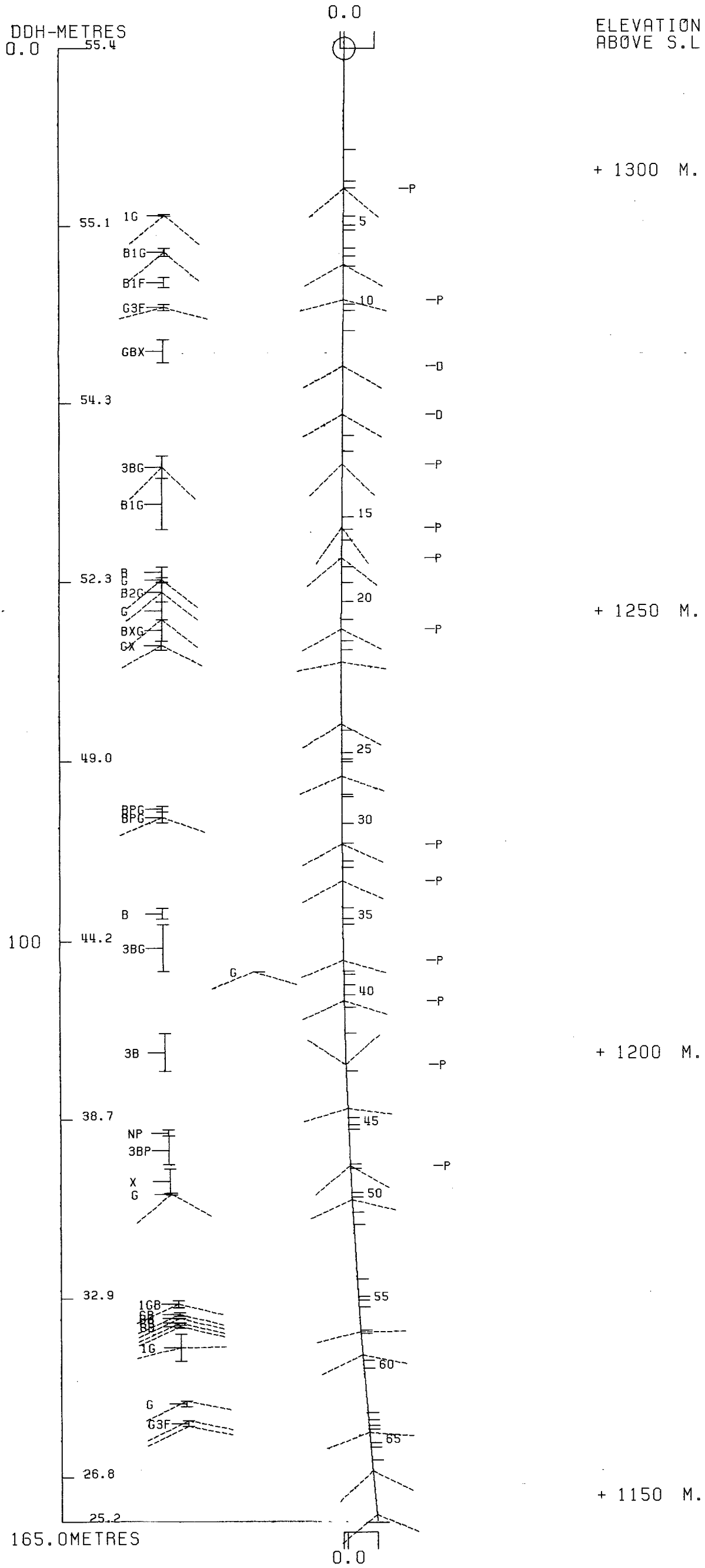

CYPRUS ANVIL MINING CORPORATION
PROGRAM DH161 29 JAN 1985 12:58 PM

DDH: FAGA234 -- 42 DEGREE PROFILE

(VIEW AZIMUTH = 312 DEGREES)

ELEV:1303 592308E ; 905353N

PLUNGE ANGLE IS 11.0 TREND ANGLE IS 312.0

CORRECTED COLLAR POSITION: X = 768.5 Z = 1313.8

SECTION NAME: 80W

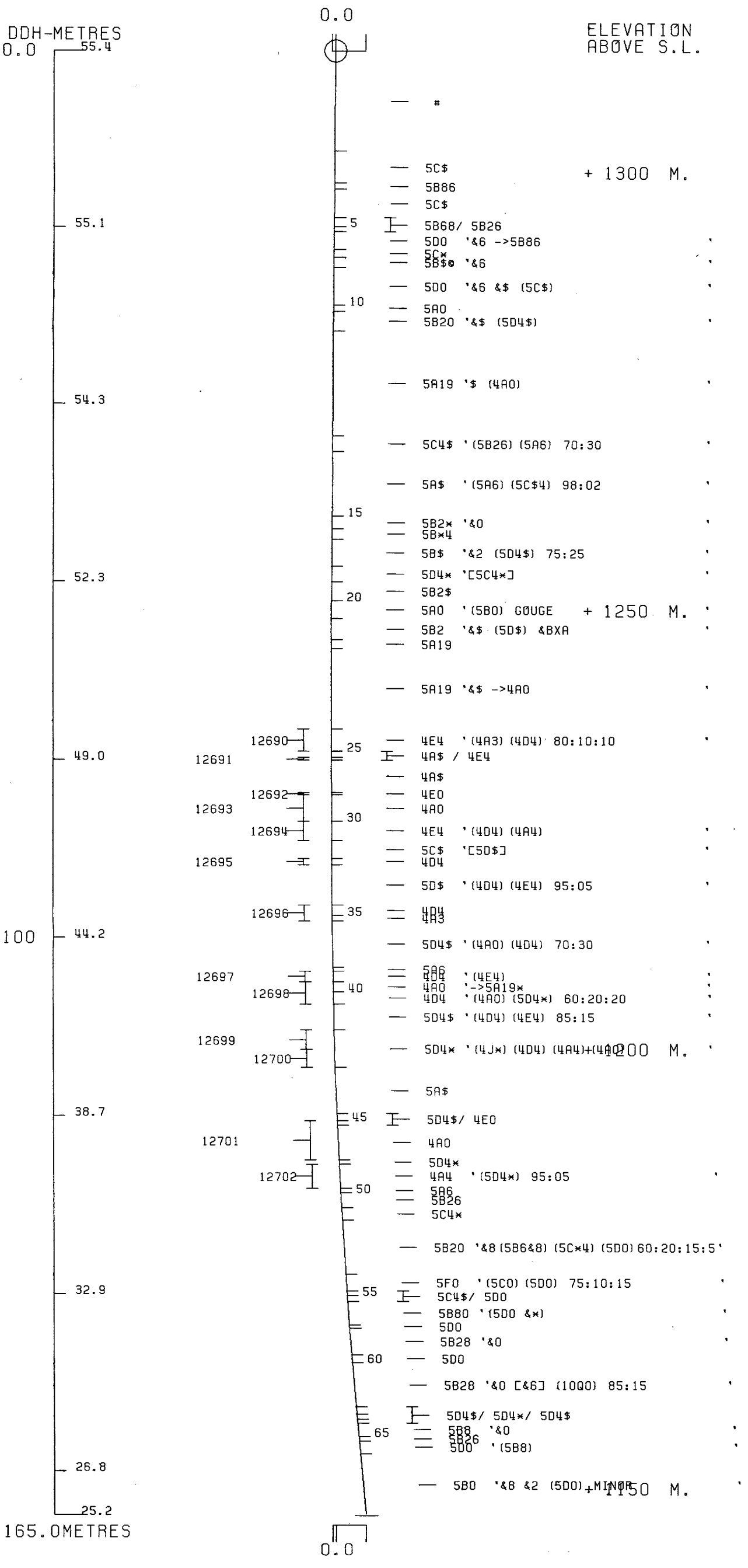

CYPRUS ANVIL MINING CORPORATION
PROGRAM DH162 29 JAN 1985 9:46 AM

FAGA236

DRILL HOLE	:	FAGA236
NORTHING	:	905,266.9
EASTING	:	592,225.9
ELEVATION	:	1,304.0
TOTAL DEPTH	:	439.2
SECTION	:	W 82
R.F.E.	:	S2
RFE DIRECTION:		230
PLUNGE ANGLE :		11
PLUNGE DIRECT:		312
DHD CALC:		1
SS CALC:		1

DETAIL RECORD COUNTS:

NOS ORE-SAMPLES:	50
NOS DOWN-H-SURVEYS:	9
NOS DOWN-H-LITHOLOGY:	147
NOS DOWN-H-STRUCTURE:	75
NOS DOWN-H-FAULTS:	69
NOS DOWN-H-SPLINES:	9
NOS COMPOSITES:	0

DDH: FAGA236 UTM-N: 905,266.9 UTM-E: 592,225.9 UTM-ELEV: 1,304.0 TOTAL DEPTH: 439.2 SECTION: W 82
RFE: S2 RFE DIR: 230 PLUNGE ANGLES: 11 312 DHD CALC: 1 SS CALC: 1

DEPTHS FROM	DEPTHS TO	SAMPLE NO.	INT.	REC.	ROCK UNIT	ASSAYS S.G. PULP	CU %	PB %	ZN %	AG(AA) G/MT	AG(FA) G/MT	AU(FA) G/MT	PO %	PY %	TOT FE %	BAO %	HG %	MN %	AS %	BA %	S.G. W.R.
65.6	67.6	12720	2.0	2.0	4A4	3.27	.04	1.92	3.08	39.00		.40	8	1	10						
67.6	69.6	12721	2.0	2.0	4A0	3.08	.04	.44	.68	11.00		.34	5	1	7						
69.6	71.6	12722	2.0	2.0	4A0	2.95	.02	1.08	1.62	19.00		.34	4	1	5						
71.6	73.8	12723	2.2	2.0	4A4	3.06	.02	1.80	3.91	31.99		.47	6	1	7						
73.8	75.6	12724	1.8	1.8	4C0	3.00	.02	1.17	3.20	22.00		.34	3	2	6						
75.6	77.4	12725	1.8	1.8	4C0	3.10	.02	1.25	2.91	22.00		.62	4	1	6						
77.4	79.2	12726	1.8	1.8	4D0	3.16	.05	1.88	3.83	28.99		.47	9	1	10						
88.1	89.2	12727	1.1	1.1	4A0	3.06	.05	2.29	4.21	31.99		.27	2	2	4						
93.9	95.3	12728	1.4	1.4	4A4	3.10	.02	1.60	4.17	27.99		.27	4	2	7						
95.3	96.9	12729	1.6	1.6	4A0	2.95	.02	1.62	2.81	25.00		.34	3		4						
96.9	98.5	12730	1.6	1.6	4A0	2.95	.02	1.08	3.24	20.00		.27	2	2	4						
98.5	99.3	12731	.8	.8	4D0	2.97	.02	1.30	3.08	24.00		.14	1	2	4						
100.3	101.0	12732	.7	.7	4A0	3.08	.02	2.68	5.79	46.00		.14	2	3	5						
101.0	103.1	12733	2.1	2.1	4A4	3.10	.05	2.14	3.14	36.00		.27	5	1	7						
103.1	105.2	12734	2.1	1.8	4A0	3.10	.05	1.69	3.08	33.00		.40	5	1	6						
105.2	107.3	12735	2.1	1.2	4A4	3.08	.04	3.00	7.59	60.99		.55	2	1	4						
107.3	109.4	12736	2.1	1.0	4A4	3.00	.04	2.37	5.09	44.00		.40	2	1	3						
109.4	110.6	12737	1.2	1.2	4D0	3.04	.04	1.78	4.28	31.99		.55	3	3	6						
110.6	111.5	12738	.9	.1	4A4	2.98	.04	1.93	4.30	36.00		.07	1	3	4						
111.5	112.8	12739	1.3	1.1	4A4	3.08	.02	2.41	4.87	36.00		.07	3	3	6						
112.8	114.0	12740	1.2	1.2	4A0	3.00	.02	1.59	3.58	27.00		.01	1	3	4						
114.6	117.0	12741	2.4	2.4	4D4	3.20	.04	3.22	6.50	50.00		.20	5	2	7						
117.0	118.5	12742	1.5	1.5	4E4	4.28	.05	3.33	8.10	67.00		.75	24	3	28						
119.2	120.1	12743	.9	.1	4E0		.01	.29	1.41	17.00											
122.5	124.0	12744	1.5	1.4	4C0	2.95	.05	1.62	2.25	25.00		.14	3	3	6						
124.0	126.4	12745	2.4	2.0	4A4	3.16	.04	2.14	3.22	36.00		.62	9		10						
126.4	128.8	12746	2.4	2.2	4A4	3.10	.04	2.12	3.68	33.00		.75	5		6						
128.8	131.2	12747	2.4	2.1	4A4	3.16	.05	3.02	2.60	43.00		1.30	7		8						
131.2	133.8	12748	2.6	2.2	4A0	3.04	.14	1.78	2.60	28.99		.62	7		7						
134.7	136.2	12749	1.5	1.3	4A34		.02	4.02	4.88	71.00											
136.8	138.1	12750	1.3	1.2	4DA		.04	2.39	4.29	40.00											
138.9	140.5	12751	1.6	1.6	4A4	3.12	.02	3.04	6.29	52.00		.68	6	1	8						
140.5	142.2	12752	1.7	1.7	4A4	2.95	.02	1.93	4.94	39.00		.20	1	1	3						
142.2	143.4	12753	1.2	1.1	3G96	2.95	.02	1.47	1.74	24.00		.27	1	1	2						
143.4	144.8	12754	1.4	1.4	3G46	2.93	.14	1.25	2.21	14.99		.27	1	1	3						
146.1	147.0	12755	.9	.7	4CH		.02	2.24	3.77	44.00											
147.0	148.1	12756	1.1	1.1	3G96		.02	.69	2.20	13.00											
154.8	156.1	12757	1.3	1.3	4D5		.05	1.42	2.31	24.00											
157.1	158.1	12758	1.0	1.0	5D4*9		.02	.80	1.02	13.99											

DDH: FAGA236 UTM-N: 905,266.9 UTM-E: 592,225.9 UTM-ELEV: 1,304.0 TOTAL DEPTH: 439.2 SECTION: W 82
RFE: S2 RFE DIR: 230 PLUNGE ANGLES: 11 312 DHD CALC: 1 SS CALC: 1

DEPTHS FROM	DEPTHS TO	SAMPLE NO.	INT.	REC.	ROCK UNIT	S.G. PULP	CU %	PB %	ZN %	AG(AA) G/MT	AG(FA) G/MT	AU(FA) G/MT	PO %	PY %	TOT FE %	BAO %	HG %	MN %	AS %	BA %	S.G. W.R.
158.1	160.1	12759	2.0	2.0	4C5	3.10	.05	1.62	3.12	29.99		.40	2	5	7						
161.9	164.0	12760	2.1	2.1	4A4	3.16	.02	2.54	4.42	43.00		.47	2	7	10						
164.0	166.1	12761	2.1	1.9	4A4	3.16	.04	2.21	5.09	36.00		.47	1	5	7						
290.9	292.4	12762	1.5	1.5	4G4#	4.16	.11	4.82	9.32	97.00		1.03	1	18	19						
357.3	359.0	12763	1.7	1.7	4EGL	3.91	.08	3.91	5.23	54.00		.68	2	13	15						
360.0	361.1	12764	1.1	1.0	4G4	4.57	.14	6.23	6.62	89.00		1.51	3	21	24						
361.1	363.0	12765	1.9	1.8	4E0*	4.63	.23	1.65	1.25	24.00		1.64	5	35	40						
363.5	364.7	12766	1.2	1.1	4ELD		.11	.68	.46	13.00											
364.7	365.9	12767	1.2	1.2	4G4	4.50	.11	5.24	5.92	66.00		.95	5	18	23						
365.9	367.9	12768	2.0	2.0	4C79	3.74	.27	1.26	1.87	22.00		.20	10	17	27						
367.9	369.8	12769	1.9	1.9	4C79	3.37	.36	.76	1.85	17.00		.27	7	9	16						
WEIGHTED AVERAGE																					
65.6	79.2		13.6	13.4		3.09	.03	1.36	2.74	24.98		.42	5	1	7						
88.1	89.2		1.1	1.1		3.06	.05	2.29	4.21	31.99		.27	2	2	4						
93.9	99.3		5.4	5.4		2.99	.02	1.40	3.33	24.14		.27	3	2	5						
100.3	114.0		13.7	10.4		3.06	.04	2.20	4.63	39.97		.31	3	2	5						
114.6	118.5		3.9	3.9		3.61	.04	3.26	7.11	56.53		.41	12	3	15						
119.2	120.1		.9	.1			.01	.29	1.41	17.00											
122.5	133.8		11.3	9.9		3.09	.06	2.17	2.91	33.77		.72	6	1	7						
134.7	136.2		1.5	1.3			.02	4.02	4.88	71.00											
136.8	138.1		1.3	1.2			.04	2.39	4.29	40.00											
138.9	144.8		5.9	5.8		2.99	.05	1.98	4.01	33.77		.36	2	1	4						
146.1	148.1		2.0	1.8			.02	1.39	2.91	26.95											
154.8	156.1		1.3	1.3			.05	1.42	2.31	24.00											
157.1	160.1		3.0	3.0		2.06	.04	1.34	2.42	24.66		.27	1	3	5						
161.9	166.1		4.2	4.0		3.16	.03	2.37	4.76	39.50		.47	2	6	8						
290.9	292.4		1.5	1.5		4.16	.11	4.82	9.32	97.00		1.03	1	18	19						
357.3	359.0		1.7	1.7		3.91	.08	3.91	5.23	54.00		.68	2	13	15						
360.0	363.0		3.0	2.8		4.61	.20	3.33	3.21	47.83		1.59	4	30	34						
363.5	369.8		6.3	6.2		3.06	.24	1.75	2.37	27.15		.33	6	11	18						

DDH: FAGA236 UTM-N: 905,266.9 UTM-E: 592,225.9 UTM-ELEV: 1,304.0 TOTAL DEPTH: 439.2 SECTION: W 82
RFE: S2 RFE DIR: 230 PLUNGE ANGLES: 11 312 DHD CALC: 1 SS CALC: 1

DEPTH	ZENITH	AZIMUTH
0.000	180.000	0.000
24.700	176.000	123.000
67.400	169.500	128.000
128.300	169.000	127.000
189.300	165.000	120.000
250.200	168.000	133.000
311.200	169.000	122.000
372.200	167.500	111.000
433.100	166.500	104.000

DDH: FAGA236 UTM-N: 905,266.9 UTM-E: 592,225.9 UTM-ELEV: 1,304.0 TOTAL DEPTH: 439.2 SECTION: W 82
RFE: S2 RFE DIR: 230 PLUNGE ANGLES: 11 312 DHD CALC: 1 SS CALC: 1

DEPTH	UNIT	CODE	DESC	RECOVERY	IND
18.9	0001	#		0.5-	1
24.6	0002	5B2D	(5B0)(5D0) 60:25:15	0.5-	1
29.7	0003	5D0		0.5-	1
30.5	0004	5B2D	(5D0)(5A0)	0.5-	1
31.4	0005	5D0	(5A0)	0.5-	1
32.0	0006	5A0		0.5-	1
36.7	0007	5B2D	(5D0)(5B0) 35:35:30	0.5-	1
40.9	0008	5D0		0.5-	1
46.4	0009	5B0	(5D0) 95:05	0.5-	1
47.1	0010	5D0		0.5-	1
50.9	0011	5B0	&2	0.5-	1
54.0	0012	5D0	(5B2D) 80:20	0.5-	1
58.8	0013	5B0		0.5-	1
60.7	0014	5B0	(5D0) 50:50	0.5-	1
65.6	0015	5B$		0.5-	1
73.8	0016	4A0	&4	0.5-	1
79.2	0017	4D0	(4D5)(5D4$) 95:05:TRACE	0.5-	1
82.7	0018	5D$	(5C$) 80:20	0.5-	1
87.5	0019	5C$	(5D$) 95:05	0.5-	1
88.1	0020	5D4*		0.5-	1
88.8	0021	4D0		0.5-	1
89.2	0022	4A0		0.5-	1
90.5	0023	5C4$	(5D4$)(4D0) 30:40:30	0.5-	1
91.4	0024	5A6	(5D4*)	0.5-	1
93.3	0025	5C4$	(5D4$) 60:40	0.5-	1
93.6	0026	5A1$		0.5-	1
93.9	0027	5C4$		0.5-	1
95.0	0028	4A4	(4D0)	0.5-	1
95.3	0029	5C4$		0.5-	1
96.5	0030	4A0	(4D0)	0.5-	1
99.3	0031	4D0	(4D5)(5D4*) 50:50:TRACE	0.5-	1
100.3	0032	5B2$		0.5-	1
100.5	0033	4A4		0.5-	1
101.0	0034	4D4	(5D4$)	0.5-	1
109.4	0035	4A4	&0 (4C5) (5D4$)	0.5-	1
110.6	0036	4D0		0.5-	1
111.5	0037	4A4		0.5-	1
111.7	0038	5D4*		0.5-	1
114.0	0039	4A4	(4D5)	0.5-	1
114.6	0040	5D4$		0.5-	1
117.0	0041	4D4		0.5-	1
118.5	0042	4E4		0.5-	1
119.2	0043	5D4$	(10QQ)	0.5-	1
120.1	0044	4E0		0.5-	1
122.5	0045	5D4$	(5C4$)	0.5-	1
124.0	0046	4C0		0.5-	1
133.8	0047	4A4	&0	0.5-	1
134.7	0048	5A0		0.5-	1
136.2	0049	4A34		0.5-	1
136.8	0050	5C4$		0.5-	1
137.4	0051	4D4	(5D4*) 99:01	0.5-	1

DDH: FAGA236 UTM-N: 905,266.9 UTM-E: 592,225.9 UTM-ELEV: 1,304.0 TOTAL DEPTH: 439.2 SECTION: W 82
RFE: S2 RFE DIR: 230 PLUNGE ANGLES: 11 312 DHD CALC: 1 SS CALC: 1

DEPTH	UNIT	CODE	DESC	RECOVERY	IND
138.1	0052	4A4		0.5-	1
138.9	0053	5C4*		0.5-	1
142.2	0054	4A4		0.5-	1
143.4	0055	3G96	[58296]	0.5-	1
144.3	0056	3G41	6	0.5-	1
145.8	0057	10Q0	(3G46) 70:30	0.5-	1
146.1	0058	3G4	&6	0.5-	1
147.0	0059	4C0	(4H1 BXA) AT TOP	0.5-	1
148.1	0060	3G96	[58269]	0.5-	1
154.8	0061	3G0	&6 &*	0.5-	1
156.1	0062	4D5		0.5-	1
157.1	0063	3G46	&9 (3G9)	0.5-	1
158.1	0064	5D4*	9 ->4L64	0.5-	1
158.7	0065	4D5		0.5-	1
159.7	0066	3G46		0.5-	1
160.1	0067	4D5		0.5-	1
161.9	0068	10Q0		0.5-	1
166.1	0069	4A4	(5D4*)	0.5-	1
168.6	0070	5A$	(5D4$) 70:30	0.5-	1
172.2	0071	3G0	&9 &$	0.5-	1
174.0	0072	3G$	(3B$)	0.5-	1
176.4	0073	5B*	&2	0.5-	1
198.9	0074	5B80	&2 (5D0)(5F0)	0.5-	1
201.4	0075	5C$		0.5-	1
204.4	0076	5D0	(5B80)	0.5-	1
205.9	0077	5A19	6	0.5-	1
207.1	0078	5D$	(5A6)	0.5-	1
209.4	0079	5A61	(5D$)	0.5-	1
220.1	0080	5B2$	(5D4$)	0.5-	1
222.5	0081	5A6	&$	0.5-	1
224.5	0082	5D4$	(5A6 &$)	0.5-	1
226.8	0083	5A16	&$ (10Q0)	0.5-	1
229.3	0084	5D$	(5A16)	0.5-	1
239.9	0085	5A$	(5A19 ->4A0)	0.5-	1
241.0	0086	5D*		0.5-	1
241.1	0087	5A$		0.5-	1
242.2	0088	5C$	(5D$)	0.5-	1
243.2	0089	5A$		0.5-	1
249.1	0090	3G9		0.5-	1
252.5	0091	3G9	(5A6)	0.5-	1
262.4	0092	3G9		0.5-	1
263.8	0093	5A6		0.5-	1
264.8	0094	5D$	(5A6) 70:30	0.5-	1
267.3	0095	5A6		0.5-	1
271.5	0096	3G9		0.5-	1
273.7	0097	5A6		0.5-	1
279.0	0098	3G9		0.5-	1
283.0	0099	5A6		0.5-	1
285.7	0100	3G9	(10Q0)	0.5-	1
286.0	0101	4A4		0.5-	1
287.2	0102	5A96		0.5-	1

DDH: FAGA236 UTM-N: 905,266.9 UTM-E: 592,225.9 UTM-ELEV: 1,304.0 TOTAL DEPTH: 439.2 SECTION: W 82
RFE: S2 RFE DIR: 230 PLUNGE ANGLES: 11 312 DHD CALC: 1 SS CALC: 1

DEPTH	UNIT	CODE	DESC	RECOVERY	IND
237.7	0103	3G96		0.5-	1
289.6	0104	3G46	21 (10Q0)	0.5-	1
290.9	0105	10Q0	(3G64)	0.5-	1
292.4	0106	4G4#	POROUS	0.5-	1
292.5	0107	4D5		0.5-	1
292.6	0108	4L41		0.5-	1
292.8	0109	5D4*	(4D4)	0.5-	1
311.9	0110	3G9		0.5-	1
313.2	0111	3G4	->4L6	0.5-	1
313.6	0112	3G9		0.5-	1
315.0	0113	3G4	(5D4$)	0.5-	1
320.8	0114	3G4	->4L6 (4L67)	0.5-	1
348.3	0115	3G0	(3B3 BIOTITE)	0.5-	1
348.8	0116	5D4*		0.5-	1
351.4	0117	3G0	(10Q0)	0.5-	1
351.6	0118	5D4*		0.5-	1
352.0	0119	3G9	(10Q@)	0.5-	1
352.3	0120	4H1		0.5-	1
356.1	0121	4L0	&4 &7	0.5-	1
356.9	0122	5D0	&4 %BIOTITE	0.5-	1
357.3	0123	4L0		0.5-	1
357.5	0124	4E4		0.5-	1
357.8	0125	5D4$	BIOTITE	0.5-	1
358.6	0126	4G4		0.5-	1
358.9	0127	4L0		0.5-	1
359.0	0128	4E46		0.5-	1
359.5	0129	4L0	(10Q0)	0.5-	1
359.7	0130	3G9		0.5-	1
360.0	0131	4L0	&4 (10Q0)	0.5-	1
361.1	0132	4G4	&# (4E46 &#)	0.5-	1
363.0	0133	4E0*	&4 &1 &$	0.5-	1
363.5	0134	5D$		0.5-	1
364.2	0135	4E0		0.5-	1
364.5	0136	4L0		0.5-	1
364.7	0137	4D5		0.5-	1
365.9	0138	4G4	(4E4$)	0.5-	1
368.7	0139	4C79		0.5-	1
369.0	0140	4L0		0.5-	1
369.8	0141	4C79		0.5-	1
373.1	0142	4L0	&7 &2 &9	0.5-	1
395.2	0143	3G0		0.5-	1
402.5	0144	3G0	BIOTITE, GARNET	0.5-	1
415.1	0145	4L2	(3G4) BIOTITE	0.5-	1
429.4	0146	3G4	(10Q0)	0.5-	1
439.2	0147	3G93	BIOTITE	0.5-	1

DDH: FAGA236 UTM-N: 905,266.9 UTM-E: 592,225.9 UTM-ELEV: 1,304.0 TOTAL DEPTH: 439.2 SECTION: W 82
RFE: S2 RFE DIR: 230 PLUNGE ANGLES: 11 312 DHO CALC: 1 SS CALC: 1

DDH	F DEPTH	T DEPTH	FEAT	SYMTRY	S0 ANGLE	S0 DIRECT	S1 ANGLE	S1 DIRECT	S2 ANGLE	S2 DIRECT	RFE CDE	DHDC	SDC	PROCESS
FAGA236	0.0	19.0	PS2	P	0	0	0	0	67	230	0	1	1	1
FAGA236	0.0	23.8	PS2	P	0	0	0	0	60	230	0	1	1	1
FAGA236	0.0	28.2	PS2	P	0	0	0	0	68	230	0	1	1	1
FAGA236	0.0	33.0	PS2	P	0	0	0	0	70	230	0	1	1	1
FAGA236	0.0	36.6	PS2	P	0	0	0	0	80	230	0	1	1	1
FAGA236	0.0	41.2	PS2	P	0	0	0	0	80	230	0	1	1	1
FAGA236	0.0	46.3	PS2	P	0	0	0	0	58	230	0	1	1	1
FAGA236	0.0	53.4	CS2		0	0	0	0	72	230	0	1	1	1
FAGA236	0.0	57.5	PS2	P	0	0	0	0	75	230	0	1	1	1
FAGA236	0.0	65.0	CS2		0	0	0	0	75	230	0	1	1	1
FAGA236	0.0	70.1	CS2		0	0	0	0	65	230	0	1	1	1
FAGA236	0.0	74.6	CS2		0	0	0	0	75	230	0	1	1	1
FAGA236	0.0	77.5	CS2		0	0	0	0	70	230	0	1	1	1
FAGA236	0.0	85.0	PS2	P	0	0	0	0	72	230	0	1	1	1
FAGA236	0.0	88.8	CS2		0	0	0	0	75	230	0	1	1	1
FAGA236	0.0	96.4	CS2		0	0	0	0	80	230	0	1	1	1
FAGA236	0.0	104.6	CS2		0	0	0	0	65	230	0	1	1	1
FAGA236	0.0	111.0	CS2		0	0	0	0	70	230	0	1	1	1
FAGA236	0.0	115.9	PS2	P	0	0	0	0	55	230	0	1	1	1
FAGA236	0.0	122.3	CS2		0	0	0	0	80	230	0	1	1	1
FAGA236	0.0	127.0	CS2		0	0	0	0	80	230	0	1	1	1
FAGA236	0.0	129.5	CS2		0	0	0	0	90	230	0	1	1	1
FAGA236	0.0	136.9	PS2	P	0	0	0	0	65	230	0	1	1	1
FAGA236	0.0	143.7	PS2	P	0	0	0	0	75	230	0	1	1	1
FAGA236	0.0	147.7	CS2		0	0	0	0	68	230	0	1	1	1
FAGA236	0.0	153.8	CS2		0	0	0	0	82	230	0	1	1	1
FAGA236	0.0	160.0	CS2		0	0	0	0	68	230	0	1	1	1
FAGA236	0.0	165.6	CS2		0	0	0	0	70	230	0	1	1	1
FAGA236	0.0	171.5	PS2	P	0	0	0	0	60	230	0	1	1	1
FAGA236	0.0	176.8	CS2		0	0	0	0	85	230	0	1	1	1
FAGA236	0.0	182.0	CS2		0	0	0	0	80	230	0	1	1	1
FAGA236	0.0	186.3	CS2		0	0	0	0	80	230	0	1	1	1
FAGA236	0.0	192.0	PS2	P	0	0	0	0	78	230	0	1	1	1
FAGA236	0.0	198.0	PS2	P	0	0	0	0	75	230	0	1	1	1
FAGA236	0.0	205.0	PS2	P	0	0	0	0	80	230	0	1	1	1
FAGA236	0.0	210.0	PS2	P	0	0	0	0	75	230	0	1	1	1
FAGA236	0.0	217.3	CS2		0	0	0	0	75	230	0	1	1	1
FAGA236	0.0	225.1	PS2	P	0	0	0	0	72	230	0	1	1	1
FAGA236	0.0	230.3	CS2		0	0	0	0	70	230	0	1	1	1
FAGA236	0.0	236.0	CS2		0	0	0	0	65	230	0	1	1	1
FAGA236	0.0	238.5	CS2		0	0	0	0	65	230	0	1	1	1
FAGA236	0.0	247.2	CS2		0	0	0	0	87	230	0	1	1	1
FAGA236	0.0	253.1	PS2	P	0	0	0	0	77	230	0	1	1	1
FAGA236	0.0	258.0	PS2	P	0	0	0	0	85	230	0	1	1	1
FAGA236	0.0	263.9	CS2		0	0	0	0	82	230	0	1	1	1
FAGA236	0.0	269.1	CS2		0	0	0	0	73	230	0	1	1	1
FAGA236	0.0	275.4	CS2		0	0	0	0	75	230	0	1	1	1
FAGA236	0.0	280.7	PS2	P	0	0	0	0	66	230	0	1	1	1
FAGA236	0.0	286.4	PS2	P	0	0	0	0	65	230	0	1	1	1
FAGA236	0.0	291.9	PS2	P	0	0	0	0	65	230	0	1	1	1
FAGA236	0.0	297.8	CS2		0	0	0	0	75	230	0	1	1	1

DDH: FAGA236 UTM-N: 905,266.9 UTM-E: 592,225.9 UTM-ELEV: 1,304.0 TOTAL DEPTH: 439.2 SECTION: W 82
RFE: S2 RFE DIR: 230 PLUNGE ANGLES: 11 312 DHD CALC: 1 SS CALC: 1

DDH	F DEPTH	T DEPTH	FEAT	SYMTRY	S0 ANGLE	S0 DIRECT	S1 ANGLE	S1 DIRECT	S2 ANGLE	S2 DIRECT	RFE CDE	DHDC	SDC	PROCESS
FAGA236	0.0	303.0	PS2	P	0	0	0	0	87	230	0	1	1	1
FAGA236	0.0	309.3	PS2	P	0	0	0	0	82	230	0	1	1	1
FAGA236	0.0	314.7	CS2		0	0	0	0	80	230	0	1	1	1
FAGA236	0.0	319.8	PS2	P	0	0	0	0	80	230	0	1	1	1
FAGA236	0.0	326.5	CS2		0	0	0	0	85	230	0	1	1	1
FAGA236	0.0	332.5	PS2	P	0	0	0	0	80	230	0	1	1	1
FAGA236	0.0	338.3	CS2		0	0	0	0	85	230	0	1	1	1
FAGA236	0.0	344.3	CS2		0	0	0	0	85	230	0	1	1	1
FAGA236	0.0	351.6	CS2		0	0	0	0	70	230	0	1	1	1
FAGA236	0.0	360.3	PS2	P	0	0	0	0	70	230	0	1	1	1
FAGA236	0.0	364.5	PS2	P	0	0	0	0	80	230	0	1	1	1
FAGA236	0.0	371.4	PS2	P	0	0	0	0	70	230	0	1	1	1
FAGA236	0.0	377.3	CS2		0	0	0	0	75	230	0	1	1	1
FAGA236	0.0	383.4	CS2		0	0	0	0	82	230	0	1	1	1
FAGA236	0.0	387.0	PS2	P	0	0	0	0	70	230	0	1	1	1
FAGA236	0.0	394.2	PS2	P	0	0	0	0	80	230	0	1	1	1
FAGA236	0.0	398.9	CS2		0	0	0	0	70	230	0	1	1	1
FAGA236	0.0	405.3	PS2	P	0	0	0	0	80	230	0	1	1	1
FAGA236	0.0	410.5	PS2	P	0	0	0	0	80	230	0	1	1	1
FAGA236	0.0	415.6	CS2		0	0	0	0	75	230	0	1	1	1
FAGA236	0.0	422.0	PS2	P	0	0	0	0	77	230	0	1	1	1
FAGA236	0.0	425.8	PS2	P	0	0	0	0	65	230	0	1	1	1
FAGA236	0.0	432.4	PS2	P	0	0	0	0	72	230	0	1	1	1
FAGA236	0.0	438.4	PS2	P	0	0	0	0	70	230	0	1	1	1

170CT83 GRUM

DOWN-HOLE FAULTS (DH020)

DDH: FAGA236 UTM-N: 905,266.9 UTM-E: 592,225.9 UTM-ELEV: 1,304.0 TOTAL DEPTH: 439.2 SECTION: W 82
RFE: S2 RFE DIR: 230 PLUNGE ANGLES: 11 312 DHD CALC: 1 SS CALC: 1

DDH	F DEPTH	T DEPTH	FEAT	REC CD	PARLL	UPPER PLANE		INTERNAL PLANE		LOWER PLANE		DHD
FAGA236	26.3	26.7	G			0	0	0	0	0	0	1
FAGA236	26.7	27.9	B1G			0	0	0	0	0	0	1
FAGA236	27.9	28.0	G			0	0	0	0	0	0	1
FAGA236	28.3	28.4	G			0	0	0	0	0	0	1
FAGA236	28.6	29.7	G			0	0	0	0	0	0	1
FAGA236	29.7	30.5	G			0	0	99	999	0	0	1
FAGA236	30.5	31.4	BG	5		0	0	0	0	0	0	1
FAGA236	31.4	32.0	G			0	0	99	999	0	0	1
FAGA236	34.4	34.5	G			0	0	99	999	0	0	1
FAGA236	0.0	50.9	1G			0	0	0	0	0	0	1
FAGA236	52.6	52.7	G			0	0	99	999	0	0	1
FAGA236	0.0	57.3	1G			0	0	99	999	0	0	1
FAGA236	0.0	86.8	1G			0	0	0	0	0	0	1
FAGA236	90.5	91.4	G3F			99	999	0	0	0	0	1
FAGA236	93.3	93.6	G			0	0	0	0	0	0	1
FAGA236	93.9	95.0	B			0	0	0	0	0	0	1
FAGA236	95.3	98.5	B			0	0	0	0	0	0	1
FAGA236	100.2	100.3	G			0	0	99	999	0	0	1
FAGA236	101.5	102.4	RG			0	0	0	0	0	0	1
FAGA236	109.2	109.4	G			0	0	0	0	0	0	1
FAGA236	110.6	118.5	2B			0	0	0	0	0	0	1
FAGA236	124.0	131.8	3B			0	0	0	0	0	0	1
FAGA236	131.8	132.3	G	6		0	0	0	0	0	0	1
FAGA236	132.6	134.5	G	7		0	0	0	0	99	999	1
FAGA236	142.1	142.2	G			0	0	99	999	0	0	1
FAGA236	144.8	145.8	QF?			0	0	0	0	0	0	1
FAGA236	168.0	168.1	G			0	0	99	999	0	0	1
FAGA236	170.0	170.2	F			15	0	0	0	0	0	1
FAGA236	0.0	174.6	1G			0	0	50	0	0	0	1
FAGA236	191.0	191.1	G			45	0	0	0	35	30	1
FAGA236	208.5	209.0	BG			0	0	0	0	0	0	1
FAGA236	209.0	209.4	G			0	0	99	999	0	0	1
FAGA236	209.4	215.5	B			0	0	0	0	0	0	1
FAGA236	215.5	216.6	G3F	8		0	0	0	0	99	999	1
FAGA236	216.6	218.8	B			0	0	0	0	0	0	1
FAGA236	218.8	219.3	G3F			99	999	0	0	0	0	1
FAGA236	262.5	262.6	G			0	0	99	999	0	0	1
FAGA236	0.0	262.9	1G			0	0	45	140	0	0	1
FAGA236	0.0	267.8	BG			0	0	99	999	0	0	1
FAGA236	0.0	268.6	G			0	0	99	999	0	0	1
FAGA236	271.5	271.6	BG			35	50	0	0	99	999	1
FAGA236	0.0	273.7	G			0	0	99	999	0	0	1
FAGA236	279.3	279.4	BG			0	0	99	999	0	0	1
FAGA236	280.9	281.4	BG			0	0	99	999	0	0	1
FAGA236	281.8	282.4	BG			0	0	99	999	0	0	1
FAGA236	0.0	303.6	1G			0	0	99	999	0	0	1
FAGA236	0.0	304.4	1G			0	0	99	999	0	0	1
FAGA236	0.0	307.0	1G			0	0	99	999	0	0	1
FAGA236	318.0	318.1	G			0	0	99	999	0	0	1
FAGA236	0.0	343.8	G			0	0	0	0	0	0	1
FAGA236	345.9	346.5	BG			0	0	0	0	0	0	1

DDH: FAGA236 UTM-N: 905,266.9 UTM-E: 592,225.9 UTM-ELEV: 1,304.0 TOTAL DEPTH: 439.2 SECTION: W 82
RFE: S2 RFE DIR: 230 PLUNGE ANGLES: 11 312 DHD CALC: 1 SS CALC: 1

DDH	F DEPTH	T DEPTH	FEAT REC CD	PARLL	UPPER PLANE		INTERNAL PLANE		LOWER PLANE		DHD
FAGA236	347.2	347.9	GB		0	0	99	999	0	0	1
FAGA236	349.4	349.7	G3F		0	0	99	999	0	0	1
FAGA236	0.0	351.2	G		0	0	99	999	0	0	1
FAGA236	363.5	364.2	D		0	0	0	0	0	0	1
FAGA236	365.9	368.7	D		0	0	0	0	0	0	1
FAGA236	373.1	387.6	B1G		0	0	0	0	0	0	1
FAGA236	387.6	387.9	G		0	0	99	999	0	0	1
FAGA236	387.9	392.0	B1G		0	0	0	0	0	0	1
FAGA236	392.0	393.9	G		50	340	0	0	99	999	1
FAGA236	393.9	394.8	B1G		0	0	0	0	0	0	1
FAGA236	394.8	395.0	GB		0	0	0	0	70	90	1
FAGA236	403.3	404.4	G		0	0	0	0	40	0	1
FAGA236	405.0	405.1	G		0	0	15	90	0	0	1
FAGA236	411.0	411.5	G		0	0	0	0	15	0	1
FAGA236	414.1	414.5	BG		0	0	0	0	99	999	1
FAGA236	424.8	425.2	G2F		0	0	99	999	0	0	1
FAGA236	427.8	427.9	G		0	0	99	999	0	0	1
FAGA236	0.0	428.8	G		0	0	99	999	0	0	1

DDH: FAGA236 UTM-N: 905,266.9 UTM-E: 592,225.9 UTM-ELEV: 1,304.0 TOTAL DEPTH: 439.2 SECTION: W 82
RFE: S2 RFE DIR: 230 PLUNGE ANGLES: 11 312 DHD CALC: 1 SS CALC: 1

DDH	SEGMENT NOS	COND INDICATOR
FAGA236	1	2
FAGA236	2	2
FAGA236	3	2
FAGA236	4	2
FAGA236	5	2
FAGA236	6	2
FAGA236	7	2
FAGA236	8	2
FAGA236	9	1

82W

CYPRUS ANVIL MINING CORPORATION

Page 1 of 15

DIAMOND DRILL CORE LOG

Date: 20 July 82

Hole Number: FAG A 236

Project: Grum

Location: Vangorda Plateau

Claim: Grum 2

~~Terr.~~ Plane UTM Co-ords.: 6905266.903 N

CAMC Mine Survey: 592225.943 E

Grid Co-ords: 82 W

9 N

CAMC Mine Survey Elevation: ~~1303m~~ 1303.985m

Total Depth: 1441' (439.2m)

Purpose: to test southwest steep limb

Reason hole Terminated: tested target hit fault bottomed in ϵ_2

Logged by: DSJ GAS

Date(s) Logged: 10 July 82 - 19 July 82

Drilling Contractor: Arctic DD

Hole Cemented: No

Steel down hole: None

Size	CORE From	To
NW	0	62
NQ	62	1441

Collar Cased and Capped: Yes

has geothermal probe down it (see Reid Group)

Started: 8 July Completed: 14 July 82

Reference Fabric Orientation Diagram:

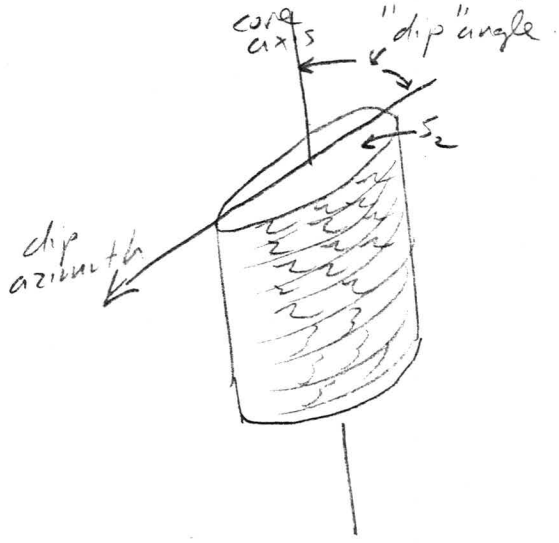

All symmetry determinations looking

NW with S_2 dipping

SW with dip azimuth 230.

was 295° in 1982

C.A.M.C. 1981 - E - 1

don't bother he got laid off.

Cyprus Anvil Mining Corp.
Diamond Drill Core Log

DDH FAGA236 (2–8)

Date: _____ Logged By: DSJ/GAJ

Code	Drillhole	Elevation	Northing	Easting	Units (feet/metres)	R.F.E.	
1	2–8	10–16	17–24	25–32	34–39	41–42	
T	FAGA236	1304.0	905266.9	592225.9	METERS	S2	

Code	Drillhole	Depth	Zenith Angle	True Azimuth	Comments
1	2–8	10–14	22–26	28–32	34–56
R	FAGA236	0000	180.0	000.0	AT COLLAR
R	FAGA236	247	176.0	123.0	SPERRY SUN SINGLE SHOT
R	FAGA236	674	169.5	128.0	
R	FAGA236	1283	169.0	127.0	
R	FAGA236	1893	165.0	120.0	
R	FAGA236	2502	168.0	133.0	
R	FAGA236	3112	169.0	122.0	
R	FAGA236	3722	167.5	111.0	
R	FAGA236	4331	166.5	104.0	

Code	Drillhole	Comments, Errant Remarks, Snivellings and / or Lewd Suggestions
1	2–8	10–56
		THIS IS BORING

DDH FAGA236 (2 8) — Cyprus Anvil Mining Corp. — Page 3 of 15

Lithologic Log — Date: 10 July 82 — Logged By: DSJ/GJ

Code	From	To	Recov.	No.	Unit	Description
1	10 14	16 20	22 24	26 28	30 34	35
L	0	1.89		1	*	Overburden and casing through bedrock
L	1.89	2.46		2	SBRD	(SBO)(SDO) 60:25:15 - intact
L	2.46	2.97		3	SDO	unit broken and gouged throughout
						must gouge sub // S_2 but mainly ind.
						major gouges at. 26.3-26.7, 27.9-28.0
						28.3-28.4 28.6-29.7, recovery approx
						2.75 m over interval. - part of major
						fault zone
L	2.97	3.10		4	SBRO	(SDO)(SAO) gouge. internal fabric // S_2
						upper & lower IND - minor loss only
L	3.10	3.14		5	SDO	(SAO) broken core and gouge .5m recvy.
L	3.14	3.20		6	SAO	gouge. - fabric // S_2 - major fault
						spans 26.3 - 32.0 m
L	3.20	3.67		7	SBRO	(SDO)(SBO) 35.35.30 10 cm S_2 // gouge
						at. 34.4-34.5
L	3.67	4.09		8	SDO	intact
L	4.09	4.64		9	SBO	(SDO) 95:5 intact
L	4.64	4.71		10	SDO	
L	4.71	5.09		11	SBO	±2 intact base of unit 10 cm S_2 // gouge
						at top and xcutting S_2 at base.
L	5.09	5.40		12	SDO	(SB2O) 80:20 gouge@52.6-52.7-S_2 //
L	5.40	5.88		13	SBO	2cm gouge // S_2 @ 57.3
L	5.88	6.07		14	SBO	(SDO) 50:50
L	6.07	6.56		15	SB*	dolo. - marker above unit 4
L	6.56	7.38		16	4AO	±4 intact 5-6% Pb Zn
L	7.38	7.92		17	4DO	(4DS)(SD4* dol.) 95:5:tr 6-7% Pb Zn
L	7.92	8.27		18	SD*	(SC*) dolo. 80:20
L	8.27	8.75		19	SC*	(SD*) dolo 95:5 5cm gouge @ 80.8
L	8.75	8.81		20	SD4*	
L	8.81	8.88		21	4DO	6-7% Pb Zn
L	8.88	8.92		22	4AO	3-4% Pb Zn
L	8.92	9.05		23	SC4*	dol "Fuch" (SD4*)(4DO) 30:40:30
L	9.05	9.14		24	SA6	(SD4*) gouge upper // S_2 lower ind
						pucky - major fault.
L	9.14	9.33		25	SC4*	dol. "fuch" (SD4*) dol 60:40
L	9.33	9.36		26	SA1*	dol gouge

C.A.M.C. 1981 - E-3

DDH FA 6A 236 (2 — 8)

Cyprus Anvil Mining Corp.

Lithologic Log Date: _____ Logged By: DSJ GAJ

Code	From	To	Recov.	No.	Unit	Description
1	10 14	16 20	22 24	26 28	30 34	35
L	93.6	93.9		27	SC4*	dol fresh.
L	93.9	95.0		28	4AH	(4D0) interval broken throughout. 5-6% Pb Zn
L	95.0	95.3		29	SC4*	dol "fresh"
L	95.3	98.5		30	4A0	(4D0) broken over interval 3-4% Pb Zn
L	98.5	99.3		31	4D0	(4D5)(SD4*) 50:50 + tr 7-8% Pb Zn
L	99.3	100.3		32	5B2*	dol. 100.2 - 100.3 = 5½ ll gouge.
L	100.3	100.5		33	4AH	8-10 Pb Zn
L	100.5	101.0		34	4D4	(SD4* dol) +10% Pb Zn
L	101.0	102.4		35	4AD	(4C5)(SD4* dol.) ~6 Pb Zn
						101.5 - 102.4 = rubble + gouge upper & lower incl
						109.2 - 109.4 = incl. gouge, probably 5½ ll
L	102.4	110.6		36	4DH	Intact 10% Pb Zn
L	110.6	111.5		37	4AH	moderately broken but ungouged 5-6 Pb Zn
L	111.5	111.7		38	SD4*	"
L	111.7	114.0		39	4AH	(4D5) " 7-8% Pb Zn
L	114.0	114.6		40	SD4*	dol "fresh" "
L	114.6	117.0		41	4DH	" 10-12% Pb Zn
L	117.0	118.5		42	4EH	" 8-10% Pb Zn
L	118.5	119.2		43	SDH*	dol fresh (000)
L	119.2	120.1		44	4EP	5% Pb Zn
L	120.1	122.5		45	SD4*	dol "fresh" (SC4*)
L	122.5	124.0		46	4C0	1-2% Pb Zn
L	124.0	133.8		47	4AD	core badly broken - incipiently bxa over interval with local gouge as bxa matrix - major gouge zones at 131.8 - 132.3, 132.6 - 133.8 - incl - part of larger fault zone continued below 3-5% Pb Zn
L	133.8	134.7		48	SAD	gouge - from 133.8 to 134.5 lower 11½ upper contact incl - part of major gouge from 131.8 - 134.5 in which there is 2 m of recovery
L	134.7	136.2		49	4A30	intact 3-4% Pb Zn
L	136.2	136.8		50	SC4*	dol fresh intact - strong "fresh"
L	136.8	137.4		51	4D4	(SD4*) 99:1 8-9% Pb Zn
L	137.4	138.1		52	4A4	9% Pb Zn

DDH FAGA236 (2 — 8)

Cyprus Anvil Mining Corp.

Lithologic Log Date: _____ Logged By: _____

Code	From	To	Recov.	No.	Unit	Description
1	10 14	16 20	22 24	26 28	30 34	35
L	1138	1389		53	5C4*	
L	1389	1422		54	4A4	core 142.1 - 142.2 = 11 S_2 7-9% Pb Zn
L	1422	1434		55	3G9 6	[SB296] medium dark grey phyllite with local sphalerite lamina as possible repl. mineraliz in sods versus usual exhalative type mineraliz.
L	1434	1448		56	3G4 1 6	less carbonaceous more sulfide rich variant of above - weakly bleached look to phyllite. prominent ZnS lamina generally S_2 foliaform in siliceous 3G 2-3% Pb Zn
L	1448	1458		57	0 2 0	(3G46) 70:30 - possible quartz healed fault.
L	1458	1461		58	3G4	±6 similar to above units 55 + 56
L	1461	1470		59	4C 0	(4H1 BXA) at top of interval 3-4% Pb Zn
L	1470	1481		60	3G9 6	[SB269] as above. S_2 foliaform sulfide replacements(?) 1-2% Pb Zn
L	1481	1548		61	3G0	±6 ± * unit is medium grey thinly banded, CS_2 foliated with dolomitic appearance but fizzes only weakly in 20% - possible fine grained ankerite or dolo or saussuritized foldsp. in finely granular lighter lithons - minor foliaform reddish brn. ZnS. From 153.4 - 153.5 is better developed band of S_2 foliaform sphal and galena - 2-4% Pb Zn. For this band 6-8% Pb Zn
L	1548	1561		62	4D5	
L	1561	1571		63	3G4 6	±9 (3G9)
L	1571	1581		64	5D4*	9 → 4G4 1-2% Pb Zn
L	1581	1587		65	4D5	7-8% Pb Zn
L	1587	1597		66	3G4 6	weakly bleached musc. phyllites with minor S_2 foliaform ZnS
L	1597	1601		67	4D5	8-10% Pb Zn
L	1601	1619		68	000	minor galena as fracture fillings

DDH FAGA236 (2–8)

Cyprus Anvil Mining Corp.

Lithologic Log

Page 6 of 15

Date: _____ Logged By: _____

Code	From	To	Recov.	No.	Unit	Description
1	10–14	16–20	22–24	26–28	30–34	35
L	1619	1661		69	4A4	(5D4*) 8-10% Pb2n
L	1661	1686		70	5A*	dolo (5D4*) 70:30
L	1686	1722		71	3G0	±9 ± * dolo lamine very minor throught
						unit - S_2 ∥ gouge at 168.0-168.1
						steep fault at 170.0 - 170.2
						upper contact 15°/000 lower contact
						broken - ind. but S_2 ∥ ???
L	1722	1740		72	3G*	dolo. (3B* dolo)
L	1740	1764		73	5B*	±2 interval ends with 1cm gouge
						@ 50°/000
L	1764	1989		74	5B80	±2 (5D0)(5F0) cannot reliably
						estimate proportions as contacts
						very gradational and diffuse
						numerous 5D0 bands recognized
						through interval - essentially
						calcareous throught interval.
						similar to "green" unit at base
						of A-234 top of A-160 and A-179
						calcareous nature suggests unit
						is part of Vangorda Fm but
						this is very tenuous. @ 191m gouge X cutting S_2
L	1989	2014		75	5C*	dolo. upper at 45/000 lower 35/030
L	2014	2044		76	5D0	(5B80)
L	2044	2059		77	5A196	minor Zn S rich qtz bands ∥ S_1
						with no py.
L	2059	2071		78	5D*	dolo. (5A6)
L	2071	2094		79	5A61	(5D* dolo.) unit generally broken
						208.5 - 209.4 = gouge and broken core
						upper ½ of interval lower ½ gouge
						∥ to S_2
L	2094	2201		80	5B2*	dolo. (5D4*) interval badly broken
						and gouged throught - major fault.
						main gouges at: 215.5-216.6m 0.9m rec.
						upper = ind, lower = ∥ S_2
						218.8 - 219.3 718 - 719.5' upper S_2 ∥ lower = ind
						Fault zone thus from 215.5 - 219.3

DDH F16GA236 (2–8)

Cyprus Anvil Mining Corp.

Lithologic Log

Date: 16 July 82 Logged By: DSJ / GAJ

Code	From	To	Recov.	No.	Unit	Description
1	10–14	16–20	22–24	26–28	30–34	35
L	2201	2225		81	5A6	±* dolo – dolomite in local S_1
						folia
L	2225	2245		82	5D4*	(5A6±* dolo)
L	2245	2268		83	5A16	±* dolo. (OQO) dolo in local thin lamine
L	2268	2293		84	5D*	dolo. (5A16)
L	2293	2399		85	5A*	dolo. (5A19 → 4AOultra poor – unit
						characteristically laminated with
						white dolomitic S_1 lithons seperated
						by black folia
L	2399	2410		86	5D*	
L	2410	2411		87	5A*	as unit 85
L	2411	2422		88	5C*	(5D*) dolo.
L	2422	2432		89	5A*	dolo as unit 85 – black & white lamine
L	2432	2491		90	369	unit medium dark grey with
						thicker (than 85) stripped by darker S_2
						carbonaceous folia [not 5A!]
L	2491	2525		91	369	(5A6) this unit darker than previous
						due to thicker S_2 carbonaceous folia.
L	2525	2624		92	369	as unit 90 [not 5A!]
L	2624	2638		93	5A6	similar to 85 but no light dolo. layers
						S_2 ∥ gouge 262.5–262.6 at 262.9 = 2cm
						thick gouge xcutting S_2 @ 45/140
L	2638	2648		94	5D*r	dol (5A6) 70:30 thinly banded. 5D av
						10 cm interbanded with 5A =
						tuff/seds?
L	2648	2673		95	5A6	as above
L	2673	2715		96	369	absolutely non dolo.
						broken core & gouge 10cm @ 267.8 and
						268.6 both S_2 ∥
L	2715	2737		97	5A6	broken core & gouge 271.5 to 271.6
						lower S_2 ∥ upper 30/050
L	2737	2790		98	369	10cm S_2 ∥ gouge at upper contact
L	2790	2830		99	5A6	broken core & gouge over interval; non-
						dolomitic; S_2 ∥ gouge & broken core as follows:
						279.3–279.4; 280.9–281.4; 281.8–282.4
L	2830	2857		100	369	(OQO) ∥ S_2 i.e. verminform

DDH FAGA236 (2–8)

Cyprus Anvil Mining Corp.

Lithologic Log

Date: 19 July 82 Logged By: DSJ/GAJ

Code	From	To	Recov.	No.	Unit	Description
1	10–14	16–20	22–24	26–28	30–34	35
L	2857	2860		101	4A4	
L	2860	2872		102	5A96	w/ prominant qtz-py bands & v. minor ZnS X cutting S_0 ⟹ these are veins & poss. feeders to 4A4 above; also prom. qtz-py bands/veins are zoned w/ pyritic cores & qtz margins
L	2872	2877		103	3G96	
L	2877	2896		104	3G46	±1 (OQO); moderately "bleached", buff, var. siliceous, py-ZnS-PbS-aspy?-bearing phyllite i.e. replacement/diagenetic mineralization — not stratoform
L	2896	2909		105	OQO	(3G64) one "xenolith" in OQO
L	2909	2925		106	4G4*	± porous, calcitic (minor) } Anvil mini-cycle
L	2925	2924		107	4D5	
L	2924	2926		108	4L41	
L	2926	2928		109	5D4*	(4D4)
L	2928	3119		110	3G9	S_2 ∥ gouge @ 304.4 (5cm); 303.6 (5cm); 307.0 (2cm)
L	3119	3132		111	3G4	unit has prominent chloritic folia ∥ S_2 & is wkly to moderately "bleached in appearance; could have originally been an interleaved sequence of 3G calc-silicated + 3B3 [5D4*] now ⟹ 4L6
L	3132	3136		112	3G9	
L	3136	3150		113	3G4	as # 111 (5D4* dol.)
L	3150	3208		114	3G4	⟹ 4L6 as 111 & 113 w/out 5D4* (4L67) gouge ∥ S_2 318.0–318.1
L	3208	3483		115	3G0	(3B3 bio) "calc-silicated" unit w/ laminae of qtz-po-bio?; 10 cm 5C* @ 329.6 m.; gouges: 343.8 - 3cm ∥ S_2; 345.9 – 346.5 broken core & gouge @ base indeterminate; 347.2 – 347.9 S_2 ∥ incipient gouge & broken core TOI w/ S_2 ∥ & steeper gouge toward base — overall S_2 ∥.
L	3483	3488		116	5D4*	"fuchsite"
L	3488	3514		117	3G0	(OQO) gouge: 349.4 - 349.7 major fault ∥ S_2, 2cm S_2 ∥ gouge @ 351.2 m.
L	3514	3516		118	5D4*	"fuchsite"

DDH FAGA236 (2–8)

Cyprus Anvil Mining Corp.

Lithologic Log

Date: 19 July 82 Logged By: DSJ/GAJ

Code	From	To	Recov.	No.	Unit	Description
1	10–14	16–20	22–24	26–28	30–34	35
L	3516	3520		119	3G9	(OQ* ank) 60:40
L	3520	3523		120	4H1	
L	3523	3561		121	4L0	±4±7 ; altered sediments not stratiform
L	3561	3569		122	5D0	±*dol ± biotite
L	3569	3573		123	4L0	
L	3573	3575		124	4E4	
L	3575	3578		125	5D4*	dol + biotite
L	3578	3586		126	4G4	
L	3586	3589		127	4L0	
L	3589	3590		128	4E46	
L	3590	3595		129	4L0	(OQ0)
L	3595	3597		130	3G9	
L	3597	3600		131	4L0	±4 (OQ0)
L	3600	3611		132	4G4	±*calcite (4E46±*calcite)
L	3611	3630		133	4E0*	±4±1±8+*dol. ; 4E1 for 0.3 m. at TOI
						dominantly 4E0* w/ Fe_3O_4 362.7-363.0
L	3630	3635		134	5D*	dol
L	3635	3642		135	4E0	w/ rotated fragments of 4B*dol. due to boud-
						inage during 4E0 flowage
L	3642	3645		136	4L0	
L	3645	3647		137	4D5	
L	3647	3659		138	4G4	(4E4*dol.)
L	3659	3687		139	4C79	bxia due to boudinage of qtzites in
						more mass. sulfide layers
L	3687	3690		140	4L0	
L	3690	3698		141	4C79	as #139
L	3698	3731		142	4L0	±7±2±9 v. minor
L	3731	3952		143	3G0	"calc-silicated" ; unit laminarly banded,
						med. greenish gray w/ lt. pinkish buff
						bands 1-3 mm in thickness w/ biotite
						&/or chlorite margins yielding appear-
						ance c.f. EO_{VCS} — not true calc silicates
						this unit occurs in core of Grum F_1
						antiform, under Swim Lake etc. in HEmm;
						also characteristic siliceous, sulfidic
						(po & py) hairline "stringers" ≈11 S_1

DDH FAGA236 (2 – 8)

Cyprus Anvil Mining Corp.

Lithologic Log

Date: 19 July 82 Logged By: DSJ / GAJ

Code	From	To	Recov.	No.	Unit	Description
1	10 – 14	16 – 20	22 – 24	26 – 28	30 – 34	35
						gouge zones: 387.6 - 387.9 mapunit 11S2; 392.0 - 393.9 m. upper contact 50°/340° w/ slickensides raking 35° to S quadrant
						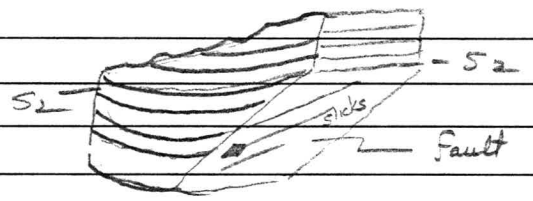
						lower contact dsd 11S2, remainder of interval broken & gouged; 394.8 - 395.6 broken & gouged, upper contact indeter, lower 70°/090
L	395 2	402 5		144	3G10	biotite + garnet bearing assemblage of above "calc-silicated" unit w/ same buff laminae
L	402 5	411 5 1		145	4L21	(3G4); unit v. similar 143 & 144 but has overall variably "bleached" appearance to buff & lt. buff gray w/ prominent biotite laminae convoluted banding & siliceous laminae & hairline qz-bearing stringers; this should be IC in amphibolite facies terrane; gouges: 403.3 - 404.4, upper indeter, lower 40°/00; 405.0 - 405.1 = 15°/090; 411 - 411.5 upper indeter, lower 15°/00; 414.1 - 414.5 broken core w/ gouge @ base 11S2
L	411 5 1	429 4		146	3G14	wkly "bleached"; (000) some w/ qz blebs & stringers; gouges: 424.8 - 425.2 m 11S2 moderately strong fault; 427.8 - 427.9 11S2; 3cm @ 425.8 11S2
L	429 4	439 2		147	3G9.3	med. gray brown phyllite (biotite grade) becoming increasingly calcareous down hole not bio. grade EOH; calcite bands & laminae c.f. "3D8" in "calc-silicates of EOH; this is just a mod. calc. horizon in HCam

C.A.M.C. 1981 – E-3

EOH

DDH FAG A236 (2–8)

Cyprus Anvil Mining Corp.

Structural Log

Date: July 19[illegible]

Page

Log

Code	From	To	Feature	Sym	S_0 Dip	S_0 Direct.	S_1 Dip	S_1 Direct.	S_2 Dip	S_2 Direct	Descr
1	10–14	16–20	22–24	26	28	32	34	38	40	44	
S		190	IND	P					67	295	Not
S		238	IND	P					60		CS_2
S		282	IND	P					68		CS_2
S		330	IND	P					70		CS_2
S		366	IND	P					80		"
S		412	IND	P					80		"
S		463	IND	P					58		"
S		534	CS2						72		
S		575	IND	P					75		CS
S		650	CS2						75		
S		701	CS2						65		
S		746	CS2						75		
S		775	CS2						70		[illegible]
S		850	IND	P					72		CS
S		888	CS2						75		
S		964	CS2						80		
S		1046	CS2						65		
S		1110	CS2						70		
S		1159	IND	P					55		
S		1223	CS2						80		
S		1270	CS2						80		
S		1295	CS2						90		
S		1369	IND	P					65		
S		1437	IND	P					75		
S		1477	CS2						68		
S		1538	CS2						82		
S		1600	CS2						68		
S		1656	CS2						70		
S		1715	IND	P					60		
S		1768	CS2						85		
S		1820	CS2						80		
S		1863	CS2						80		
S		1920	IND	P					78		
S		1980	IND	P					75		
S		2050	IND	P					80		
S		2100	IND	P					75		

DDH I.P.6.P.23.6 (2 / 8) Cyprus Anvil Mining Corp. Page 12 of 15

Structural Log Date: July 19/82 Logged By: DSJ

Code	From	To	Feature	Sym	S_0 Dip Direct.	S_1 Dip Direct.	S_2 Dip Direct	Description
1	10 14	16 20	22 24	26	28 32	34 38	40 44	
S		2117 3	CS2				75 295	
S		2125 1	1 N D	P			72	CS_2
S		2130 3	CS2				70	
S		2136 0	CS2				65	
S		2138 5	CS2				65	
S		2147 2	CS2				87	
S		2153 1	1 N D	P			77	CS_2
S		2158 0	1 N D	P			85	"
S		2163 9	CS2				82	→ D.D.
S		2169 1	CS2				73	
S		2175 4	CS2				75	→ D.D.
S		2180 7	1 N D	P			66	CS_2
S		2186 4	1 N D	P			65	"
S		2191 9		R			65	PS_2
S		2197 8	CS2				75	→ D.D
S		3030 1	1 N D	P			87	
S		3093 3	1 N D	P			82	CS_2
S		3114 7	CS2				80	→ D.D
S		3119 8	1 N D	P			80	
S		3216 5	CS2				85	
S		3312 5	1 N D	P			80	
S		3318 3	CS2				85	→ D.D.
S		3414 3	CS2				85	
S		3511 6	CS2				70	
S		3610 3		R			70	PS_2
S		3614 5	1 N D	P			80	
S		3714 4	1 N D	P			70	
S		3717 3	CS2				75	
S		3813 4	CS2				82	
S		3870	1 N D	P			70	
S		3914 2	1 N D	P			80	
S		3989	CS2				70	→ D.D.
S		4053	1 N D	P			80	
S		4105	1 N D	P			80	
S		4156	CS2				75	
S		4210	1 N D	P			77	

DDH EAGA236 (2 / 8) Cyprus Anvil Mining Corp. Page 13 of 15

Structural Log Date: July 19/82 Logged By: DSI

Code	From	To	Feature	Sys	S_0 Dip Direct.	S_1 Dip Direct.	S_2 Dip Direct	Description
1	10 14	16 20	22 24	26	28 32	34 38	40 44	
S		4125 8	1MD	P			65 295	
S		4124	1MD	P			72	
S		4184	1MD	P			70	

DDH EA-GA-23-6 (2 / 8) Cyprus Anvil Mining Corp

Logged by

ASSAY LOG (SAMPLER'S COPY) Date Sampled by

CODE	FROM	TO	SAMPLE	INTR.	REC (m)	UNIT	DESCRIPTION
	10 14	16 20	22 26	28 30	32 34	36 40	42
P	1656	1676	127120	20	20	4AP	±4
P	1676	1696	127121	20	20	4A0	±4
P	1696	1716	127122	20	20	4A0	±4
P	1716	1738	127123	22	21	4A0	±4
P	1738	1756	127124	18	18	4D0	(4DS)(SD*dolo)
P	1756	1774	127125	18	18	4D0	(4DS)(SD4*dolo)
P	1774	1792	127126	18	18	4D0	(4DS)(SD4*dolo)
P	1881	1892	127127	11	11	4D0	4A0
P	1939	1953	127128	14	14	4A4	(4DO)
P	1953	1969	127129	16	16	4A0	(4DO)
P	1969	1985	127130	16	16	4A0	(4DO)
P	1985	1993	127131	08	08	4D0	(4DS)(SD4*)
P	1003	1010	127132	07	07	4A4	4D4(SD4*)dolo
P	1010	1031	127133	21	21	4A0	(4CS)(SD4*)
P	1031	1052	127134	21	18	4A0	"
P	1052	1073	127135	21	12	4A0	"
P	1073	1094	127136	21	10	4A0	"
P	1094	1106	127137	12	12	4D4	
P	1106	1115	127138	09	09	4A4	
P	1115	1128	127139	13	11	4A4	(4DS)
P	1128	1140	127140	12	12	4A4	(4DS)
P	1146	1170	127141	36	34	4D4	
P	1170	1185	127142	15	15	4E4	
P	1192	1201	127143	09	09	4E0	
P	1225	1240	127144	15	14	4CP	
P	1240	1264	127145	24	20	4A0	
P	1264	1288	127146	24	22	4A0	
P	1288	1312	127147	24	21	4A0	

DDH FAGA236 (2 … 8) Cyprus Anvil Mining Corp

Page 15 of 15

Logged by

Date Sampled by

ASSAY LOG (SAMPLER'S COPY)

CODE	FROM	TO	SAMPLE	INTR.	REC (m)	UNIT	DESCRIPTION
1	10 14	16 20	22 26	28 30	32 34	36 40	42
P	1312	1338	12748	26	22	4A0	
P	1347	1362	12749	15	13	4A30	
P	1368	1381	12750	13	12	4D4	(4AC)(SD4*)
P	1389	1405	12751	16	16	4A4	
P	1405	1422	12752	17	17	4A4	
P	1422	1434	12753	12	11	3G916	
P	1434	1448	12754	14	14	3G14	6
P	1461	1470	12755	08	07	4C0	
P	1470	1481	12756	11	11	3G916	
P	1548	1561	12757	13	13	4D5	
P	1571	1581	12758	10	10	5D4*9 → 4L64	
P	1581	1607	12759	20	20	4D5	(3G46)
P	1619	1640	12760	21	21	4A4	(SD4*)
P	1640	1661	12761	21	19	4A4	(SD4*)
P	2910	2924	12762	15	15	4G4*	(4D5)
P	3573	3590	12763	17	17	4G4	(4E46, 4E4, 4L0)
P	3610	3611	12764	11	10	4G4	±*
P	3611	3630	12765	19	18	4E0*	±4±1±8
P	3635	3647	12766	12	11	4E0	(4L0, 4D5)
P	3647	3659	12767	12	12		
P	3659	3679	12768	20	20	4C79	
P	3679	3698	12769	19	19	4C79	(4L0)

C.A.M.C. 1981 - E - 5

DDH EA6A236 (2 / 8)

Cyprus Anvil Mining Corp.

Structural Log

Page _____ of _____

Date: _____ Logged By: _____

Code	From	To	Feature	Sym	S_0 Dip Direct.	S_1 Dip Direct.	S_2 Dip Direct	Description
1	10 14	16 20	22 24	26	28 32	34 38	40 44	
	2663	2667	G					
	[illegible]	2799	B G					
	2799	2800	G					
	2803	2804	G					
	2806	2977	G					
	[illegible]	3005	G			11 S_2		
	3005	3014	B G	5				
	3014	3200	G			11 S_2		
	3144	3445	G			11 S_2		
		5091	G					
	5126	5276	G			11 S_2		
		5733	G			11 S_2		
		5868	G					
	9005	9146	G 3F		11 S_2			
	9333	9366	G					
	9399	9500	B					
	9553	9855	B					
	10022	10283	G			11 S_2		
	10215	10244	R G					
	10292	10294	G					
	11206	11855	Z B					
	12400	13183	B					
	13118	13233	G	6				
	13266	13455	G	7			11 S_2	
	14122	14222	G			11 S_2		
	14448	14580	F ?					
	16800	16811	G			11 S_2		
	17000	17022	F		15 000			
		17466	G			50 000		
	19100	19115			45 000		35	90
	20555	20900	B G					
	20900	20946	G			11 S_2		
	20946	21555	B					
	21555	21666	G 3F	8			11 S_2	
	21666	21588	B					
	21588	21933	G 3F		11 S_2			

DDH FA6A236 (2 8)

Cyprus Anvil Mining Corp.

Structural Log

Page _____ of _____

Date: _____ Logged By: _____

Code	From	To	Feature	Sym	S_0 Dip Direct.	S_1 Dip Direct.	S_2 Dip Direct	Description
1	10 14	16 20	22 24	26	28 32	34 38	40 44	
	2625	2626	G			11 S_2		
		2629	1G			45 140		
		2678	BG			11 S_2		
		2686	G			11 S_2		
	2715	2716	BG		35 050		11 S_2	
		2737	G			11 S_2		
	2793	2794	BG			11 S_2		
	2809	2814	BG			11 S_2		
	2818	2824	BG			11 S_2		
		3044	1G			11 S_2		
		3036	1G			11 S_2		
		3070	1G			11 S_2		
	3180	3181	G			11 S_2		
		3438	G					
	3459	3465	BG					
	3472	3479	GB			11 S_2		
	3494	3497	G3F			11 S_2		
		3512	G			11 S_2		
	3635	3642	D					
	3659	3687	D					
	3776	3779	G			11 S_2		
	3920	3939	G		50 340		11 S_2	
	3939	3948	B1G					
	3948	3950	GB				70 090	
	3731	3876	B1G					
	3879	3920	B1G					
	4033	4044	G				40 000	
	4050	4051	G			15 090		
	4110	4115	G				15 000	
	4141	4145	BG				11 S_2	
	4248	4252	G2F			11 S_2		
	4278	4279	G			11 S_2		
		4288	G			11 S_2		

76 U135

DRILL HOLE : FAGU135
NORTHING : 905,182.9
EASTING : 592,228.6
ELEVATION : 1,103.4
TOTAL DEPTH : 190.5
SECTION : W 80
R.F.E. : S2
RFE DIRECTION: 230
PLUNGE ANGLE : 11
PLUNGE DIRECT: 312
DHD CALC: 1
SS CALC: 0

DETAIL RECORD COUNTS:

NOS ORE-SAMPLES:	40
NOS DOWN-H-SURVEYS:	4
NOS DOWN-H-LITHOLOGY:	45
NOS DOWN-H-STRUCTURE:	59
NOS DOWN-H-FAULTS:	9
NOS DOWN-H-SPLINES:	4
NOS COMPOSITES:	0

DDH: FAGU135 UTM-N: 905,182.9 UTM-E: 592,228.6 UTM-ELEV: 1,103.4 TOTAL DEPTH: 190.5 SECTION: W 80
RFE: S2 RFE DIR: 230 PLUNGE ANGLES: 11 312 DHD CALC: 1 SS CALC: 0

DEPTHS FROM	DEPTHS TO	SAMPLE NO.	INT.	REC.	ROCK UNIT	ASSAYS S.G. PULP	CU %	PB %	ZN %	AG(AA) G/MT	AG(FA) G/MT	AU(FA) G/MT	PO %	PY %	TOT FE	BAO %	HG %	MN %	AS %	BA %	S.G. W.R.
.0	3.5	08436	3.5	3.3	4A4	3.30	.02	4.10	7.80	70.00		1.03	2	10	12						
43.7	45.7	08437	2.0	2.0	4AD4	3.63	.17	5.90	11.30	159.00		2.19	1	11	13						
45.7	48.2	08438	2.5	2.4	4AD4	3.56	.06	5.00	7.80	83.00		1.92	1	34	35						
49.6	49.9	08439	.3	.3	4AD	3.80	.05	.17	.14	12.00		.55	15	10	25						
49.9	51.3	08440	1.9	1.9	4CAE	3.98	.09	.19	.09	22.00		2.33	1	9	10						
55.1	56.9	08441	1.8	1.8	4A41	3.28	.06	3.40	5.00	66.00		2.06	1	7	8						
56.9	58.6	08442	1.7	1.7	4A41	3.16	.04	3.20	4.70	55.00		1.65		11	12						
58.6	60.5	08443	1.9	1.9	4A41	3.38	.04	3.60	6.80	77.00	79.00	1.51	1	11	13						
60.5	62.5	08444	2.0	2.0	4A41	3.42	.09	3.90	5.50	72.00		1.92	1	6	7						
64.5	67.3	08445	2.8	2.8	4A1	3.06	.05	1.19	2.05	19.00		.69	1	4	6						
68.9	70.6	08446	1.7	1.7	4A1	3.00	.04	.90	1.90	13.00		.69	1	5	6						
70.6	72.0	08447	1.4	1.4	4A1	3.06	.08	1.19	1.68	19.00		1.23	1	2	4						
72.0	74.3	08448	2.3	2.3	4L21	2.94	.03	.26	.46	6.00		.27	1		1						
82.1	83.8	08449	1.7	1.7	4L21		.03	1.08	2.60	20.00											
83.8	85.3	08450	1.5	1.5	4A1		.02	.46	.86	7.00											
85.3	86.9	08451	1.6	1.6	4A1		.04	.53	1.50	6.00											
105.2	106.5	08452	1.3	1.3	4AO	3.22	.06	1.22	1.67	22.00		.75	4	8	13						
106.5	109.7	08453	3.2	1.5	4G4	3.79	.18	4.40	7.60	85.00		1.99	1	21	23						
109.7	111.3	08454	1.6	.4	4CO	3.11	.06	.29	.55	6.00		.34	1	11	13						
125.5	128.5	91064	3.0	2.9	4L2			.53	1.00		11.00										
128.5	131.5	91065	3.0	3.0	4LO			.25	.13		5.10										
133.8	134.1	08455	.3	.3	4AO	3.18	.08	.32	.54	3.00		.62	3	11	14						
134.1	135.6	08456	1.5	1.5	4E4	4.19	.10	6.00	7.90	90.00	97.00	2.40	1	25	27						
135.6	137.2	08457	1.6	1.5	4E4	4.34	.09	3.80	6.70	68.00		1.37	1	32	33						
137.2	139.1	08458	1.9	1.9	4A4	3.20	.12	1.64	3.70	31.00		.89	1	9	10						
139.1	140.8	08459	1.7	1.7	4AO	2.97	.09	.09	.16	2.00		.34	2	5	7						
140.8	142.4	08460	1.6	.6	4AO	3.00	.14	.47	.69	8.00		.62	1	6	7						
142.4	143.3	08461	.9	.9	4AE4	4.08	.07	2.20	3.90	37.00		.82	1	18	20						
143.3	144.6	08462	1.3	1.3	4AE	3.42	.10	1.03	1.31	21.00		.69	2	14	16						
170.1	172.0	08463	1.9	1.6	4A4	3.34	.05	2.50	3.90	34.00		.62	1	10	11						
172.0	174.0	08464	2.0	2.0	4G4	4.31	.12	5.40	8.40	91.00		1.37	1	15	17						
174.0	176.0	08465	2.0	2.0	4E34	4.47	.22	2.80	3.00	35.00		1.17	3	31	35						
176.0	177.8	08466	1.8	1.8	4E8	4.42	.25	1.81	2.40	27.00	33.00	2.67	5	32	38						
177.8	179.7	08467	1.9	1.9	4E8	3.93	.20	2.70	1.83	26.00		1.51	5	23	29						
179.7	181.8	08468	2.1	2.1	4E84	4.51	.27	2.90	2.60	45.00		1.58	6	30	37						
181.8	182.1	08469	.3	.3	4G4	4.40	.14	6.40	8.30	86.00		2.19	1	13	14						
182.1	183.1	08470	1.0	1.0	4E8	4.64	.24	1.11	.46	25.00		2.67	3	38	41						
183.1	183.7	08471	.6	.6	4GO*	4.21	.16	5.70	4.20	72.00		1.85	4	19	23						
183.7	184.4	08472	.7	.7	4E7	4.29	.40	1.83	1.96	32.00		1.10	7	29	37						
184.4	185.5	08473	1.1	1.1	4AO	3.23	.07	1.63	1.69	28.00		.55	3	9	13						

WEIGHTED AVERAGE

DDH: FAGU135 UTM-N: 905,182.9 UTM-E: 592,228.6 UTM-ELEV: 1,103.4 TOTAL DEPTH: 190.5 SECTION: W 80
RFE: S2 RFE DIR: 230 PLUNGE ANGLES: 11 312 DHD CALC: 1 SS CALC: 0

DEPTHS FROM	DEPTHS TO	SAMPLE NO.	INT.	REC.	ROCK UNIT	ASSAYS S.G. PULP	CU %	PB %	ZN %	AG(AA) G/MT	AG(FA) G/MT	AU(FA) G/MT	PO %	PY %	TOT FE	BAO %	HG %	MN %	AS %	BA %	S.G. W.R.
43.7	48.2		4.5	4.4		3.59	.10	5.40	9.35	116.77		2.04	1	24	25						
49.6	51.8		2.2	2.2		3.95	.08	.18	.09	20.63		2.08	3	9	12						
55.1	62.5		7.4	7.4		3.31	.05	3.54	5.52	67.91	20.28	1.78	1	9	10						
64.5	67.3		2.8	2.8		3.06	.05	1.19	2.05	19.00		.69	1	4	6						
68.9	74.3		5.4	5.4		2.99	.04	.70	1.22	11.57		.65	1	2	3						
82.1	86.9		4.8	4.8			.03	.70	1.68	11.27											
105.2	111.3		6.1	3.2		3.49	.12	2.64	4.48	50.85		1.29	2	16	18						
125.5	131.5		6.0	5.9				.39	.56		8.05										
133.8	144.6		10.8	9.7		3.56	.10	2.08	3.36	35.36	13.47	1.00	1	15	17						
170.1	185.6		15.4	15.1		4.14	.18	2.93	3.38	42.61	3.85	1.49	4	23	28						

DDH: FAGU135 UTM-N: 905,182.9 UTM-E: 592,228.6 UTM-ELEV: 1,103.4 TOTAL DEPTH: 190.5 SECTION: W 80
RFE: S2 RFE DIR: 230 PLUNGE ANGLES: 11 312 DHD CALC: 1 SS CALC: 0

DEPTH	ZENITH	AZIMUTH
0.000	175.000	44.000
89.900	173.000	114.000
137.200	173.000	112.000
182.900	172.000	125.000

DDH: FAGU135 UTM-N: 905,182.9 UTM-E: 592,228.6 UTM-ELEV: 1,103.4 TOTAL DEPTH: 190.5 SECTION: W 80
RFE: S2 RFE DIR: 230 PLUNGE ANGLES: 11 312 DHD CALC: 1 SS CALC: 0

DEPTH	UNIT	CODE	DESC	RECOVERY	IND
3.5	0001	4A4	(4D34)(4L)	0.0	1
4.3	0002	5A6		0.0	1
43.1	0003	5B26		0.0	1
43.7	0004	4LO		0.0	1
48.2	0005	4D4	->4A4 (4G4#) MINOR	0.0	1
48.8	0006	5B26		0.0	1
49.9	0007	4LC	(4HO) AT BOTTOM	0.0	1
51.8	0008	4C5	(4EO) &#	0.0	1
55.1	0009	5B26	->4L LOCALLY	0.0	1
62.5	0010	4A41		0.0	1
64.1	0011	5B26	->4L	0.0	1
64.5	0012	5B6	(4L) GOUGE	0.0	1
67.3	0013	4A1	PHYLLITIC [4C5]	0.0	1
68.9	0014	4LO	[5B4]	0.0	1
72.0	0015	4A1	PHYLLITIC [4C5]	0.0	1
83.8	0016	4L21	(4D4 SERICITIC AT BOTTOM)	0.0	1
86.9	0017	4A1	->4AL [4C5]	0.0	1
88.4	0018	4LC	&2 &7	0.0	1
105.2	0019	5B26	->(4L AT BOTTOM)	0.0	1
106.5	0020	4A0		0.0	1
109.7	0021	4G4	->4E	0.0	1
111.3	0022	4CC	SERICITIC	0.0	1
125.5	0023	5B26		0.0	1
127.4	0024	4L12		0.0	1
128.0	0025	5C4*		0.0	1
130.5	0026	4LO	->4L1	0.0	1
133.0	0027	5D3	->4L	0.0	1
133.8	0028	4LO		0.0	1
134.1	0029	4A0		0.0	1
137.2	0030	4E4	(4EO)	0.0	1
142.4	0031	4A0	(4A4)	0.0	1
144.6	0032	4A0	&4 (4E) (4L[5D4*])	0.0	1
161.8	0033	5B6	->5B&6 (4L)	0.0	1
164.6	0034	4L7		0.0	1
166.2	0035	5B6	->5B26	0.0	1
170.1	0036	5A6		0.0	1
172.0	0037	4A4	(4G4) MINOR	0.0	1
174.0	0038	4G4		0.0	1
181.8	0039	4E8	&4 (4G4)(4CO)	0.0	1
182.1	0040	4G4		0.0	1
183.1	0041	4E8		0.0	1
183.7	0042	4GC*	.	0.0	1
184.4	0043	4E7		0.0	1
185.5	0044	4A0		0.0	1
190.5	0045	4LO	(5D4*)	0.0	1

DDH: FAGU135 UTM-N: 905,182.9 UTM-E: 592,228.6 UTM-ELEV: 1,103.4 TOTAL DEPTH: 190.5 SECTION: W 80
RFE: S2 RFE DIR: 230 PLUNGE ANGLES: 11 312 DHD CALC: 1 SS CALC: 0

DDH	F DEPTH	T DEPTH	FEAT	SYMTRY	S0 ANGLE	S0 DIRECT	S1 ANGLE	S1 DIRECT	S2 ANGLE	S2 DIRECT	RFE CDE	DHDC	SDC	PROCESS
FAGU135	0.1	3.5	PS2	P	0	0	0	0	0	0	0	1	0	0
FAGU135	0.0	4.1	CS2		0	0	0	0	65	230	0	1	0	0
FAGU135	0.0	9.1	CS2		0	0	0	0	73	230	0	1	0	0
FAGU135	0.0	14.1	CS2		0	0	0	0	69	230	0	1	0	0
FAGU135	0.0	19.8	CS2		0	0	0	0	72	230	0	1	0	0
FAGU135	0.0	24.1	CS2		0	0	0	0	67	230	0	1	0	0
FAGU135	0.0	29.5	CS2		0	0	0	0	76	230	0	1	0	0
FAGU135	0.0	33.5	CS2		0	0	0	0	75	230	0	1	0	0
FAGU135	0.0	38.0	CS2		0	0	0	0	74	230	0	1	0	0
FAGU135	0.0	42.9	CS2		0	0	0	0	80	230	0	1	0	0
FAGU135	3.5	43.7	CS2	S	0	0	0	0	0	0	0	1	0	0
FAGU135	0.0	47.3	PS2		0	0	0	0	63	230	0	1	0	0
FAGU135	43.7	48.3	PS2	P	0	0	0	0	0	0	0	1	0	0
FAGU135	0.0	52.0	CS2		0	0	0	0	76	230	0	1	0	0
FAGU135	48.3	54.3	CS2	S	0	0	0	0	0	0	0	1	0	0
FAGU135	0.0	54.7	CS2		0	0	0	0	76	230	0	1	0	0
FAGU135	54.3	55.0	CS2	Z	0	0	0	0	0	0	0	1	0	0
FAGU135	0.0	59.4	CS2		0	0	0	0	65	230	0	1	0	0
FAGU135	55.0	62.5	CS2	S	0	0	0	0	0	0	0	1	0	0
FAGU135	0.0	64.5	PS2		0	0	0	0	72	230	0	1	0	0
FAGU135	0.0	69.5	PS2		0	0	0	0	70	230	0	1	0	0
FAGU135	62.5	72.1	PS2	P	0	0	0	0	0	0	0	1	0	0
FAGU135	0.0	73.0	CS2		0	0	0	0	70	230	0	1	0	0
FAGU135	0.0	78.7	CS2		0	0	0	0	77	230	0	1	0	0
FAGU135	0.0	82.0	CS2		0	0	0	0	80	230	0	1	0	0
FAGU135	0.0	87.0	CS2		0	0	0	0	70	230	0	1	0	0
FAGU135	0.0	92.1	CS2		0	0	0	0	72	230	0	1	0	0
FAGU135	0.0	97.5	CS2		0	0	0	0	75	230	0	1	0	0
FAGU135	0.0	102.0	CS2		0	0	0	0	70	230	0	1	0	0
FAGU135	0.0	102.7	CS2		0	0	0	0	58	230	0	1	0	0
FAGU135	0.0	103.4	CS2		0	0	0	0	17	230	0	1	0	0
FAGU135	0.0	104.6	CS2		0	0	0	0	65	230	0	1	0	0
FAGU135	72.1	105.2	CS2	S	0	0	0	0	0	0	0	1	0	0
FAGU135	0.0	106.3	PS2		0	0	0	0	65	230	0	1	0	0
FAGU135	105.2	111.3	PS2	P	0	0	0	0	0	0	0	1	0	0
FAGU135	0.0	111.5	CS2		0	0	0	0	70	230	0	1	0	0
FAGU135	0.0	116.1	CS2		0	0	0	0	69	230	0	1	0	0
FAGU135	0.0	120.9	CS2		0	0	0	0	74	230	0	1	0	0
FAGU135	111.3	123.4	CS2	M	0	0	0	0	0	0	0	1	0	0
FAGU135	0.0	124.9	CS2		0	0	0	0	74	230	0	1	0	0
FAGU135	0.0	130.0	CS2		0	0	0	0	77	230	0	1	0	0
FAGU135	123.4	130.5	CS2	S	0	0	0	0	0	0	0	1	0	0
FAGU135	0.0	132.8	PS2		0	0	0	0	75	230	0	1	0	0
FAGU135	130.5	137.2	PS2	P	0	0	0	0	0	0	0	1	0	0
FAGU135	0.0	137.5	CS2		0	0	0	0	65	230	0	1	0	0
FAGU135	0.0	141.8	CS2		0	0	0	0	60	230	0	1	0	0
FAGU135	137.2	142.3	CS2	S	0	0	0	0	0	0	0	1	0	0
FAGU135	0.0	145.9	CS2		0	0	0	0	70	230	0	1	0	0
FAGU135	0.0	150.5	CS2		0	0	0	0	75	230	0	1	0	0
FAGU135	0.0	155.3	CS2		0	0	0	0	69	230	0	1	0	0
FAGU135	0.0	160.4	CS2		0	0	0	0	70	230	0	1	0	0

DDH: FAGU135 UTM-N: 905,182.9 UTM-E: 592,228.6 UTM-ELEV: 1,103.4 TOTAL DEPTH: 190.5 SECTION: W 80
RFE: S2 RFE DIR: 230 PLUNGE ANGLES: 11 312 DHD CALC: 1 SS CALC: 0

DDH	F DEPTH	T DEPTH	FEAT	SYMTRY	S0 ANGLE	S0 DIRECT	S1 ANGLE	S1 DIRECT	S2 ANGLE	S2 DIRECT	RFE CDE	DHDC	SDC	PROCESS
FAGU135	0.0	165.5	CS2		0	0	0	0	74	230	0	1	0	0
FAGU135	142.3	168.6	CS2	M	0	0	0	0	0	0	0	1	0	0
FAGU135	0.0	170.5	PS2		0	0	0	0	79	230	0	1	0	0
FAGU135	168.6	188.5	PS2	P	0	0	0	0	0	0	0	1	0	0
FAGU135	0.0	188.7	CS2		0	0	0	0	60	230	0	1	0	0
FAGU135	188.5	189.4	CS2	S	0	0	0	0	0	0	0	1	0	0
FAGU135	0.0	190.0	CS2		0	0	0	0	60	230	0	1	0	0
FAGU135	189.4	190.5	CS2	Z	0	0	0	0	0	0	0	1	0	0

DDH: FAGU135 UTM-N: 905,182.9 UTM-E: 592,228.6 UTM-ELEV: 1,103.4 TOTAL DEPTH: 190.5 SECTION: W 80
RFE: S2 RFE DIR: 230 PLUNGE ANGLES: 11 312 DHD CALC: 1 SS CALC: 0

DDH	F DEPTH	T DEPTH	FEAT	REC CD	PARLL	UPPER PLANE		INTERNAL PLANE		LOWER PLANE		DHD
FAGU135	0.0	59.0	X			0	0	0	0	0	0	1
FAGU135	62.5	64.1	BP			0	0	0	0	0	0	1
FAGU135	64.1	64.5	GXF			0	0	0	0	0	0	1
FAGU135	106.5	109.7	P	5		0	0	0	0	0	0	1
FAGU135	109.7	111.3	P	2		0	0	0	0	0	0	1
FAGU135	0.0	134.7	X			0	0	0	0	0	0	1
FAGU135	0.0	163.1	X			0	0	0	0	0	0	1
FAGU135	0.0	167.2	BG			0	0	0	0	0	0	1
FAGU135	183.1	183.7	X?			0	0	0	0	0	0	1

CYPRUS ANVIL MINING CORPORATION

DIAMOND DRILL CORE LOG

Hole Number: 76-U135

Project: Grum Relog

Location: Vangorda Plateau

Claim:

UTM ~~Terr.~~ Plane Co-ords.: 6905182.89 N

592228.57 E

Grid Co-ords.: 80W/7N

Elevation: 1103.4

Total Depth: 190.5 m

Fabric Orientation Diagram:

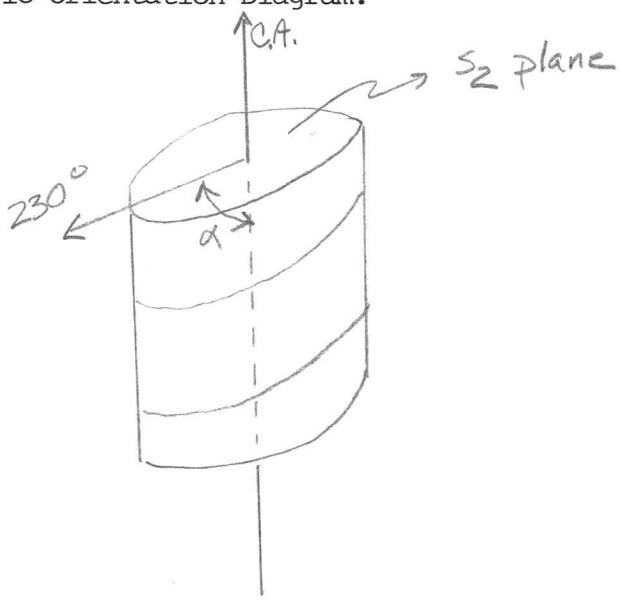

All symmetry determinations looking

NW with S_2 dipping

SW with dip azimuth 230.

Purpose:

Re Logged by: JSM Date(s) Logged: June 29 - July 11, 1980

Drilling Contractor:

Core:	Size	From	To	Collar Cased and Capped:
	BQ	0	190.5	

Started: July 27, 1976 Completed: Aug. 4, 1976

Cyprus Anvil Mining Corp.
Diamond Drill Core Log

DDH 76-U135
2 8

Code	Drillhole	Elevation	Northing	Easting	Comments
1	2 8	10 16	17 24	25 32	34 48
T	76-U135	1103.4	905182.9	592228.6	METRES

Code	Drillhole	Depth	Zenith Angle	True Azimuth	Comments
1	2 8	10 14	22 26	28 32	34 56
R	76-U135	0 0	175.0	44.0	AT COLLAR
R	76-U135	89.9	173.0	114.0	SPERRY SUN
R	76-U135	137.2	173.0	112.0	
R	76-U135	182.9	172.0	125.0	
R			.	.	
R			.	.	
R			.	.	
R			.	.	
R			.	.	
R			.	.	
R			.	.	
R			.	.	
R			.	.	
R			.	.	
R			.	.	
R			.	.	

Code	Drillhole	Comments, Errant Remarks, Snivellings and /or Lewd Suggestions
1	2 8	10 47

DDH 76-4135 (2–8)

Cyprus Anvil Mining Corp.
Lithologic Log

Logged By: JSM

Code	From	To	Unit	Code	Description
1	10–14	16–20	22 23	25 27	
L	0 0	3 5	1	4A4	w/ interbeds of 4D (50% sfd., 20% PbZn) and of 4L (from 5D w/ py) Overall 10-15% PbZn (red sphal. > gal)
L	3 5	4 3	2	5A6	
L	4 3	4 3 1	3	5B2	6 w/ some sericite; qtz veins assoc. w/ chlorite + po
L	4 3 1	4 3 7	4	4L0	qtz vein w/ chlorite + py
L	4 3 7	4 8 2	5	4AD	gradations of 4A4 and 4D4 w/ minor phyllitic partings 12-16% PbZn (orange sphal + galena). 4D4 is more prevalent @ TOI, 4A @ EOI. (4G4* @ 44.1) (1981)
L	4 8 2	4 8 8	6	5B2	6 1981: [4L0 (4H0 @ EOI)]
L	4 8 8	4 9 9	7	4L7	sericite alteration of 5B, going to massive po 49.6-49.9
L	4 9 9	5 1 8	8	4CAE	4A w/ minor graphite; ~60% sfd (py) grades into 4C (50% py 50% qtz-fspar) which → 80% massive py (4E) locally. <1% PbZn 1981: [4C5 (4E0), ±*]
L	5 1 8	5 5 1	9	5B2	6 minor sericite → 4L locally, OQO w/ minor py
L	5 5 1	6 2 5	10	4A4	1 sfd = qtz > graphite; ~40% sfd (py, orange to red sphal, gal) 7-11% PbZn. Carbonate cemented bxia @ 59.0
L	6 2 5	6 4 1	11	5B2	6 → 4L broken recovery
L	6 4 1	6 4 5	12		bxia-gouge - ang clasts of phyllite + 4L in clay matrix FAULT
L	6 4 5	6 7 3	13	4A1	sfd poor, graphite poor (5-10% each). ~4% PbZn (fine-grained red sphal, dissem galena, porphs of py in sphal (2-5mm). Local sericite
L	6 7 3	6 8 9	14	4L0	from 5B, v. minor py, sphal, gal., qtz veins [5B4]
L	6 8 9	7 2 0	15	4A1	as unit 13 ~2% PbZn the "graphite" in both these units is actually more like gray mica than graphite
L	7 2 0	8 3 8	16	4L2	1 minor PbZn ~1% (increase → 10% (?) last 0.2 m). (4D4 sericitic) (phyll. part)
L	8 3 8	8 6 9	17	4A1	→ 4AL, 2-3% PbZn (red sphal + gal) similar to units 13, 15 phyllitic partings
L	8 6 9	8 8 4	18	4L0	minor po + py
L	8 8 4	10 5 2	19	5B2	6 → 4L @ EOI, note zones of biotite(?) and of chlor blebs giving mottled appearance, minor po + py minor qtz veins, interbd of 5D @ 92.8
L	10 5 2	10 6 5	20	4A4	6-8% PbZn (red sphal + gal) phyllitic partings note bull qtz + relict mottled 5D @ TOI
L	10 6 5	10 9 7	21	4G4	→ 4E 6-8% PbZn (honey colored sphal + gal)

Note poor recovery 1.5/3.2 m

DDH 76-413.5 (2 / 8)

Cyprus Anvil Mining Corp.
Lithologic Log

Logged By: JSM

Code	From	To	Unit	Code	Description
1	10 14	16 20	22 23	25 27	
L	1097	1113	212	4LC	only 0.4ft recovered. ~30% py, 10-20% sericite 1981: [4CO sericitic]
L	1113	1255	23	5B26	QQO 115.5-116.0, 121.2-121.9 + other 2" veins
L	1255	1274	24	4L2	~1% PbZn 1981: very siliceous 4L2
L	1274	1280	25	5D4	mariposite alteration of mottled 5D 1981: 5C4*
L	1280	1305	26	4L0	as unit 24 w/ less sfd → 4L1
L	1305	1330	27	5D3	→ 4L (slight sericite, minor mariposite blebs)
					buff-gray color, biotite? – phlogopite acc. to KA
L	1330	1338	28	4L0	minor py, sphal, gal
L	1338	1341	29	4A0	
L	1341	1372	30	4E4	interbdd 4EO+4EA, avg 12-15% PbZn, (reddish sphal, gal), bxia cem. by qtz @ 134.7 (clasts of massive py)
L	1372	1424	31	4A0	~6% PbZn 137.2-138.7 & @ EOH → (4A4)
					graphite > qtz py ≅ 10-20%
L	1424	1446	32	4AE	Mixed interval
					142.4-142.7 4EO ~1% PbZn? Fold repeat?
					142.7-143.9 4A + 4L interbd (note fold nose)
					143.9-144.4 4L altered 5D, pinkish, sharp lower ctc
					144.4-144.6 AEO ~3% PbZn?, 4L @ EOI
L	1424	1618	33	5B6	locally → 5B26, 4L
L	1618	1646	34	4L7	spots of massive po, bxia w/ clasts of 4L @ 163.1,
					minor py,
L	1646	1682	35	5B6	→ 5B26 local QQO & sericite
					broken (gouged) @ 167.2
L	1682	1701	36	5A6	QQO @ EOI
L	1701	1720	37	4A4	interbd of ~~4A~~ 4G4 w/ orange-red sp 170.3-170.6
					~6% PbZn (orange sphal)
L	1720	1740	38	4G4	~14% PbZn (honey sphal + gal) 1981: 4E8 (4G4) (4QO)
L	1740	1818	39	4E0	2-5% PbZn (reddish sphal, gal) 1-2% mgt blebs ±4 (assays)
					note qtz rich zone (4C) 178-178.4
					4G4 180-180.3
L	1818	1821	40	4G4	as unit 38 6+% PbZn
L	1821	1831	41	4E0	as unit 39. 1981: 4E8
L	1831	1837	42	4G0	→ 4K center of interval (bxia clasts of py in cream colored
					carbonate w/ galena, sphal, py, mgt dissem in
					carbonate) 0 (on assays)
					5-6% PbZn 4G4*

DDH 76-4135

Cyprus Anvil Mining Corp.
Lithologic Log

Logged By: JSM

Code	From	To	Unit	Code	Description
1	10 14	16 20	22 23	25 27	
L	1837	1844	43	4E0	1981:467
L	1844	1855	44	4A0	1-2% PbZn
L	1855	1905	45	4L0	from 5D to 187.4 (relict textures, mariposite) minor py to EOI
					EOH

DDH 76-4135 (2 / 8) Cyprus Anvil Mining Corp.

Structural Log

Logged By: JSM

Code	From	To	Feature	Sym	S_1 Dip Direct.	S_2 Dip Direct.	Description
1	10 14	16 20	22 24	26	28 32	34 38	
		1	F				R region 0-3.5
S		35	F2	R			S region 3.5-
S		41	C S 2			615 2310	could S_2 be NE dipping in this region
S		91	C S 2			713 2310	to give Z sym consistent w/ KA interp?
S		141	C S 2			69 2310	
S		198	C S 2			712 2310	
S		241	C S 2			617 2310	
S		295	C S 2			716 2310	
S		335	C S 2			715 2310	
S		380	C S 2			714 2310	
S		429	C S 2			802310	
S		437	F 2	S			R region 43.7 - 48.3
S		473	P S 2			632310	
S		483	F 2	R			S region 48.3 - 54.3
S		520	C S 2			716 2310	incl sfd zone w S sym obs
S		543	F 2	E			Z region 54.3 - 55.0
S		547	C S 2			716 2310	
S		550	F 2	3			S region 55.0 - 62.5
S		594	C S 2			615 2310	interval of 4A (split) only 3 obs. possible
S		625	F 2	S			R region 62.5 - 72.1
S		645	P S 2			712 2310	sfds + 4L no sym observable
S		695	P S 2			710 2310	
S		721	F 2	R			S region 72.1 - 105.2
S		730	C S 2			710 2310	
S		787	C S 2			717 2310	
S		820	C S 2			810 2310	
S		870	C S 2			710 2310	
S		921	C S 2			712 2310	
S		975	C S 2			715 2310	
S		1020	C S 2			710 2310	
S		1027	C S 2			582310	
S		1034	C S 2			172310	
S		1046	C S 2			615 2310	
S		1052	F 2	S			R region 105.2 - 111.3
S		1063	P S 2			615 2310	
S		1113	F 2	R			M region 111.3 - 123.4

DDH 76-U135 (2 / 8) Cyprus Anvil Mining Corp.

Structural Log

Logged By: JSM

Code	From	To	Feature	Sym	S_1 Dip Direct.	S_2 Dip Direct.	Description
1	10 14	16 20	22 24	26	28 32	34 38	
S		11115	C S 2			710 2310	60/40 Z/S
S		11161	C S 2			619 2310	
S		11209	C S 2			714 2310	
S		11234	F 2	M			S region 123.4 - 130.5
S		11249	C S 2			714 2310	
S		11300	C S 2			717 2310	
S		11305	F 2	S			R region 130.5 - 137.2
S		11328	P S 2			715 2310	5D + sfds
S		11372	F 2	R			S region 137.2 - 142.3
S		11375	C S 2			615 2310	interval of 4A w/ a few S's (split)
S		11418	C S 2			610 2310	
S		11423	F 2	S			M region 142.3 - 168.6
S		11459	C S 2			710 2310	~ 45 m of R sym @ TOI
S		11505	C S 2			715 2310	
S		11553	C S 2			619 2310	
S		11604	C S 2			710 2310	
S		11655	C S 2			714 2310	
S		11686	F 2	M			R region 168.6 - 188.5
S		11705	P S 2			719 2310	sfds + 4L
S		11885	F 2	R			S region 188.5 - 189.4 ?
S		11887	C S 2			610 2310	} 4L, perhaps not reliable
S		11894	F 2	E			Z region 189.4 - EOH }
S		11900	C S 2			610 2310	
S		11905					EOH

Logged in 1980, checked for sampling 1981 (JSM

DDH 76-413.5 Cyprus Anvil Mining Corp Page ____ of ____

ASSAY LOG (SAMPLER'S COPY) Date ____ Logged by JSM Sampled by ____

CODE	FROM	TO	SAMPLE	INTR.	REC (m)	UNIT	DESCRIPTION	
	10 14	16 20	22 26	28 30	32 34	36 40	42	
P	0	35	84316	35	33	4A4		#1
P	437	457	84317	20	20	4A1	(4G4*)	#5
P	457	482	84318	25	24	4A1		#5
							5B26 + 4L0	
P	496	499	84319	03	03	4#10	(Note, this was incl. in #7)	#7
P	499	518	84410	19	19	4C1A1E	[4C5(4E0) ± *]	#8
							5B26	
P	555	569	84411	18	18	4A4A1		#10
P	569	586	84412	17	17	4A4A1		#10
P	586	605	84413	19	19	4A4A1		#10
P	605	625	84414	20	20	4A4A1		#10
							4L Bxia, gouge, fault zone / 5B26	
P	645	673	84415	28	28	4A11		#13
							4L0	
P	689	706	84416	17	17	4A11		#15
P	706	720	84417	14	14	4A11		#15
P	720	743	84418	23	23	4L21		#16
							74.3 - 821 as above + below	
			c				not sampled because not split	
P	821	838	84419	17	17	4L21	(4D4 sericitic)	#16
P	838	853	84510	15	15	4A11		#17
P	853	869	84511	16	16	4A11		#17
P	1052	1065	84512	13	13	4A14		#20
P	1065	1097	84513	32	15	4G141	→ 4E	#21
P	1097	1113	84514	16	04	4C101	sericitic	#22
P	1255 / 1285	1285 / 1315	91064 / 91119615	30 / 30	29 / 30		Kerr Addison sample #'s 3997 / 3998	#24-27
P	1338	1341	84515	03	03	4A10		#29
P	1341	1356	84516	15	15	4E14		#30
P	1356	1372	84517	16	15	4E14		#30
P	1372	1391	84518	19	19	4A10	(4A4)	#31
P	1391	1408	84519	17	17	4A10	(4A4)	#31
P	1408	1424	84610	16	16	4A10	(4A4)	#31
P	1424	1433	84611	09	09	4A1E		#32

DDH 76-64 (2) 13.5 (8) Cyprus Anvil Mining Corp

Page _____ of _____

Logged by JSM, checked JSM

ASSAY LOG (SAMPLER'S COPY) Date _____ Sampled by _____

CODE	FROM	TO	SAMPLE	INTR.	REC (m)	UNIT	DESCRIPTION
	10 14	16 20	22 26	28 30	32 34	36 40	42
P	1143	1146	84612	13	13	4AE1	#32
P	1170	1172	84613	19	16	4A41	(4G4) #37
P	1172	1174	84614	20	20	4G41	#38
P	1174	1176	84615	20	20	4E81	(4G4) (4C0) #39
P	1176	1178	84616	18	18	4E81	(4G4) (4C0) #39
P	1178	1197	84617	19	19	4E81	(4G4) (4C0) #39
P	1197	1218	84618	21	21	4E81	(4G4) (4C0) #39
P	1218	1221	84619	03	03	4G41	#40
P	1221	1231	84470	10	10	4E81	#41
P	1231	1237	84471	06	06	4G41*	#42
P	1237	1244	84472	07	07	4E71	#43
P	1244	1255	84473	11	11	4A10	#44

C.A.M.C. 1981 - E - 5

DDH 76-4-135 (2 / 8)

Cyprus Anvil Mining Corp.
Geochemical Log (Sampler's Copy)

Logged By: JSM

Sampled By:

Code	From	To	Sample No.	Description		
1	10 14	16 20	22 27	length	recovered	unit
P	1100	1115	139164	1.5	0.9	
P	1115	1135	139165	2.0	1.2	
P	1435	1457	139166	2.2	1.9	
P	1457	1482	139167	2.5	1.8	
P	1495	1518	139168	3.2	3.0	
P	1550	1579	139169	2.9	2.8	
P	1579	1594	139170	1.5	1.3	
P	1594	1610	139171	1.6	1.5	
P	1610	1625	139172	1.5	1.5	
P	1645	1672	139173	2.7	2.7	
P	1689	1716	139174	2.7	2.1	
P	1716	1743	139175	2.7	2.3	
P	1820	1838	139176	1.8	1.8	
P	1838	1869	139177	3.1	2.8	
P	1053	1082	139178	2.9	2.3	
P	1082	1113	139179	3.1	1.2	
P	1255	1285	139197	3.0	2.9	
P	1285	1315	139198	3.0	3.0	
P	1342	1356	139199	1.4	1.4	
P	1356	1373	A1000	1.7	1.7	
P	1373	1387	A1081	1.4	1.3	
P	1387	1417	A1082	3.0	2.8	
P	1417	1448	A1083	3.1	2.9	
P	1695	1722	A1084	2.7	2.0	
P	1722	1737	A1085	1.5	1.4	
P	1737	1753	A1086	1.6	1.5	
P	1753	1768	A1087	1.5	1.5	
P	1768	1783	A1088	1.5	1.5	
P	1783	1798	A1089	1.5	1.5	
P	1798	1814	A1090	1.6	1.6	
P	1814	1829	A1091	1.5	1.5	
P	1829	1844	A1092	1.5	1.5	
P	1844	1860	A1093	1.6	1.5	

DDH FAG.U.135 Cyprus Anvil Mining Corp. Page _____ of _____

2 meters 8

Structural Log Date: _____ Logged By: JSM

Code	From	To	Feature	Sym	S_0 Dip Direct.	S_1 Dip Direct.	S_2 Dip Direct	Description
1	10 14	16 20	22 24	26	28 32	34 38	40 44	
F	625	641	BP					
F	641	645	GXF					
F	1065	1097	P	5				
F	1097	1113	P	2				
F		1347	X					
F		1631	X					
F		1672	BG					
F	1831	1837	X?					
F		590	X					

C.A.M.C. 1981 - E - 4

DIAMOND DRILL RECORD

LOGGED BY ALEXANDER YOUNG-PO

D.D.H. Nº 76-U-135 PAGE 1

PROPERTY GRUM JOINT VENTURE

LATITUDE 10,978.338 80W STARTED JULY 27, 1976

DEPARTURE 7,540.543 7N COMPLETED AUGUST 4, 1976

ELEVATION 1,110.875 PROPOSED DEPTH

ULTIMATE DEPTH 190.5m

HOLE SURVEY:		
DEPTH	BEARING	DIP
COLLAR	44°	-85°
89.9	111	-83°
137.2	109	-83°
182.9	122	-82°

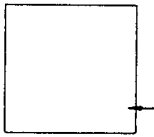

CLAIM Nº

DIRECTION AND DISTANCE FROM N.E. CLAIM POST

TOTAL CORE RECOVERY: 91%

Interval From	Interval To	DESCRIPTION	Recovery	Sample Nº	Interval From	Interval To	Sample Length	Assay - Pb	Assay - Zn	Assay - Ag	Assay - Au	Assay - Cu	Assay x Pb	Assay x Zn	Assay x Ag
0	3.5	ALTERNATING BANDS OF QUARTZ-SULFIDES (P), MINERALIZED 40 12	0.9	3964	0	1.5	1.5	5.27	8.10	77.83			7.91	12.15	116.75
		GRAPHITIC PHYLLITE (PG) AND BLEACHED PHYLLITE (Sb). 35 10	1.2	3965	1.5	3.5	2.0	4.05	6.78	55.54			8.10	13.56	111.08
		Broken blocky core ranging from pebble to 4cm long.													
		Foliation = 80-85°.		W.Av.	0	3.5	3.5	4.57	7.35	65.09			16.01	25.71	277.83
		0-1: Mineralized graphitic phyllite (PG). Pebble size.													
		1-1.5: Quartz-sulfides with short mineralized bleached													
		phyllite spans (PSb).													
		1.5-3.5: Mineralized graphitic phyllite (PG) with intervals													
		of barren bleached phyllite (Sb).													
		NOTE: All contact between Sb and Pg are sharp and clean													
		parallel to general 80-85° foliation.													
		3.5: Gradual change to Graphitic phyllite (G).													
3.5	4.6	GRAPHITIC PHYLLITE (G). Fissile, easily broken into poker													
		chips. Foliation = plane of fissility = 85-90°. F = 0-5°.													
		4.6: Gradual change to graphitic sericite phyllite (SG).													

LOGGED BY _____ D.D.H. NO 76-U-135 PAGE 2

Interval From	Interval To	DESCRIPTION	Recovery	Sample NO	Interval From	Interval To	Sample Length	Assay Pb	Assay Zn	Assay Ag	Assay Au	Assay Cu	Assay x Pb	Assay x Zn	Assay x Ag
4.6	15.0	GRAPHITIC SERICITE PHYLLITE (Sg). Very fissile breaking into poker chips readily. Foliation F$_2$ = plane of fissility = 85-90°. F$_1$ = 0-5°. Shorr bleached Phyllite run @ 6.5-6.7. Buff. Both contact sharp and clean = 85°. 15.0: Gradual change to sericite phyllite (S).	10.0		4.6	15.0	10.4								
15.0	36.6	SERICITE PHYLLITE (S). Very fissile, easily breaks into poker chips. Foliation = 85-90°; F$_1$ = 0-5°. 28.5; 33.0: Shear. 36.6: Rx gradually becoming graphitic sericite phyllite (SG) -broundary actually is arbitrary.	21.0		15.0	36.6	21.6								
36.6	43.5	GRAPHITIC SERICITE PHYLLITE (SG). Darker colour than preceeding run. Foliation = 80-85°. F$_1$ = 0°. Very fissile; breaks into poker chips following the 80-85° foliation. 43: Shear. 43.5: Gradual change to mineralized graphitic phyllite. Contact marked by bleached sericite laminae until 43.7	6.1		36.6	43.5	6.9								

LOGGED BY _____ D.D.H. Nº 76-U-135 PAGE 3

Interval From	Interval To	DESCRIPTION	Recovery	Sample Nº	Interval From	Interval To	Sample Length	Assay Pb	Assay Zn	Assay Ag	Assay Au	Assay Cu	Assay x Pb	Assay x Zn	Assay x Ag
43.5	69.0	MINERALIZED GRAPHITIC PHYLLITE (PG) W/Short intervals 20 5	1.9	3966	43.5	45.7	2.2	6.26	10.87	125.14			13.77	23.91	275.31
		of bleached phyllite (Sb) = 5cm. Foliation = 70-75°, 25 5	1.8	3967	45.7	48.2	2.5	5.00	7.71	82.63			12.50	19.28	206.58
		sometime up to 85°.	1.3		48.2	49.5	1.3								
		Compositional band Sph/Py = 75°. Has intercalated 30 4	2.3	3968	49.5	51.8	2.3	0.20	0.03	17.14					
		graphitic phyllite intervals.	3.0		51.8	55.0	3.2								
		45.5-46; 46.5-46.8; 48-48.8: Graphitic phyllite inter-30 8	2.8	3969	55.0	57.9	2.9	3.35	4.75	52.46			9.72	13.78	152.13
		vals. Fissile. All contacts clean and sharp = 80°. 35 6	1.3	3970	57.9	59.4	1.5	3.35	5.15	57.60			5.03	7.73	86.40
		Po @ 49.1. 30 6	1.5	3971	59.4	61.0	1.6	4.33	7.84	76.80			6.93	12.54	122.88
		51.8-55: Graphitic sericite phyllite (SG) interval. 40 8	1.5	3972	61.0	62.5	1.5	3.98	5.20	61.37			5.97	7.80	92.06
		Fissile. Foliation = fissility = 80°. Contact sharp = 80°.	1.8		62.5	64.5	2.0								
		F = 0°. 20 6	2.7	3973	64.5	67.2	2.7	1.73	2.13	22.28					
		62.5-64.1: Graphitic sericite phyllite gradually changing	1.5		67.2	68.9	1.7								
		to bleached phyllite at 63m. All contacts broken grd. 10 2	2.1	3974	68.9	71.6	2.7	0.81	1.25	8.91					
		64.1-64.5: FAULT. White sticky gouge with quartz- 7 1	2.3	3975	71.6	74.3	2.7	0.33	0.50	3.09					
		sulfides-phyllite fragments. 5 Tr.	7.1		74.3	82.0	7.7								
		67.3-69.0: Intervals of bleached phyllite and sericite10 3	1.6	3976	82.0	83.8	1.8	0.98	2.00	13.03			1.18	PbZn	
		phyllite. Greenish flaky minerals with sericite-chlor 7 1	2.8	3977	83.8	86.9	3.1	0.68	1.28	7.20			1.96	PbZn	
		ite interstacked with sericite flakes (like mix layers).		W.Av.	43.5	48.2	4.7	5.59	9.19	102.53			26.27	43.19	481.89
		Foliation F_2 = 75-80°; F_1 = 0-5°.		W.Av.	55.0	62.5	7.5	3.69	5.58	60.46			27.65	41.85	453.47
		69.0: Change to mineralized quartz-sericite-sulfide (P).		W.Av.	59.4	62.5	3.1	4.16	6.56	69.34			12.90	20.34	214.94
				W.Av.	82.0	86.9	4.9	1.67	PbZn						

LOGGED BY _____ D.D.H. NO. 76-U-135 PAGE 4

Interval From	Interval To	DESCRIPTION	Recovery	Sample NO	Interval From	Interval To	Sample Length	Assay Pb	Assay Zn	Assay Ag	Assay Au	Assay Cu	Assay x Pb	Assay x Zn	Assay x Ag
69.0	86.9	QUARTZ-SERICITE SULFIDE (P). Competent. Foliation = 75-80°.													
		F 1 = 0-5°. Sulfides as unevenly spaced laminae usually													
		parallel to 75-80° foliation and sometimes as S-shaped F 1.													
		At 73.8, long intervals of weak mineralization.													
		76.2-78.8: Bleached phyllite interval. Has greenish tint													
		with white groundmass. Broken ground.													
		86.9: Sharp clean contact with bleached phyllite (Sb) = 85°.													
86.9	88.4	BLEACHED PHYLLITE (Sb). Competent. Light buff with greenish	1.4		86.9	88.4	1.5								
		hue. Foliation = 75-80°. Sporadic sulfide laminae.													
		88.4: Sharp contact with sericite phyllite. Contact													
		marked by bull quartz = 70°.													
88.4	105.3	SERICITE PHYLLITE (S). Competent. Foliation = 85-90°.	15.1		88.4	105.3	16.9								
		No clear F /F relationship noted.													
		1 2 86.9-89.8: Bleached phyllite interval with chloritic/biotite													
		laminae.													
		93-97.5: Clots of Po. F = 0° at 97.7													
		1 99.1-100.8: Trace of graphite.													
		103.5: Fold nose.													
		103.6-105.3: Alternating intervals of sericite phyllite and													
		laminae of bleached sericite (S+Sb).													

LOGGED BY _____ D.D.H. Nº 76-U-135 PAGE 5

Interval From	Interval To	DESCRIPTION	Recovery	Sample Nº	Interval From	Interval To	Sample Length	Assay Pb	Assay Zn	Assay Ag	Assay Au	Assay Cu	Assay x Pb	Assay x Zn	Assay x Ag
		105.3: Contact with quartz-sulfide (P).													
105.3	111.3	QUARTZ-SULFIDE (P) with interval of massive sulfide (M).40 8	2.3	3978	105.3	108.2	2.9	3.45	5.15	65.49			10.01	14.94	189.92
		Competent. Foliation = 40-45°. Thin laminae of 35 4	1.2	3979	108.2	111.3	3.1	2.10	3.65	29.14			6.51	11.32	90.33
		graphite in some run (PG) = @ 105.8-106.5.		W.Av.	105.3	111.3	6.0	2.75	4.38	46.7			16.52	26.26	280.25
		106.7-109.7: Massive sulfide interval structureless except													
		for faint compositional banding Sph/Ph = 45-50°													
		111.3: Abrupt change to sericite phyllite (S). Contact													
		broken ground and re-drilled.													
111.3	125.5	DARK SERICITE PHYLLITE (S). Easily breaks into poker chips.	14.0		111.3	125.5	14.2								
		Foliation = fissility = 85-90°; F_1 = 0-5°. Sporadic clots													
		of sulfides.													
		125.5: Abrupt change to Quartz-sulfide (P) with intercalated													
		short runs of bleached phyllite (Sb).													
125.5	133.8	QUARTZ-SULFIDE W/INTERCALATED SHORT RUNS OF BLEACHED 15 3	2.9	3997	125.5	128.5	3.0	0.53	1.00	10.97			1.53	PbZn	
		PHYLLITE (P-Sb). Foliation = 80-85°. 10 2	3.0	3998	128.5	131.5	3.0	0.25	0.13	5.14			0.38	PbZn	
		Sulfides as laminae following general foliation. 1 Tr.	2.7		131.5	134.2	2.7	Tr. Pz est.							
		No clear F_1/F_2 relationship noted. 75 10	1.4	3999	134.2	135.6	1.4	7.02	8.07	96.69			9.83	11.30	135.37
		127.5-128: Bleached phyllite with chlorite stripes 75 12	1.7	4000	135.6	137.3	1.7	4.20	8.25	63.43			7.14	14.03	107.83
		and fuchsite spots (Sbc). 30 8	1.3	4081	137.3	138.7	1.4	2.15	4.45	34.29			3.01	6.23	48.01

LOGGED BY _____ D.D.H. NO _____ PAGE _____

Interval From	Interval To	DESCRIPTION	Recovery	Sample NO	Interval From	Interval To	Sample Length	Assay Pb	Assay Zn	Assay Ag	Assay Au	Assay Cu	Assay x Pb	Assay x Zn	Assay x Ag
		129.5-131.1: Bleached phyllite with phlogophite. 10 3	2.8	4082	138.7	141.7	3.0	0.05	Tr.	2.06					
		Pinkish-black groundmass. 30 5	2.9	4083	141.7	144.8	3.1	1.28	1.50	20.23					
		133.8: Abrupt change to Graphitic phyllite (G). Contact													
		broken ground.		W.Av.	134.2	137.3	3.1	5.47	8.17	78.45			16.97	25.33	243.20
133.8	134.2	GRAPHITIC PHYLLITE (G). Broken core. Weakly mineralized													
		with sulfide clots. Foliation = 55-60°.													
		134.2: Sharp clean contact with massive sulfide = 75°.													
134.2	137.3	MASSIVE SULFIDE (M). Competent. Structureless except for													
		some quartz inclusions (MIq). Faint compositional band = 85°.													
		Local Sph rich parts but no distinct band boundary (sort of													
		gradual build-up of value).													
		137.3: Abrupt change to mineralized graphitic phyllite (PG).													
		Contact broken ground.													
137.3	144.8	MINERALIZED GRAPHITIC PHYLLITE. Broken core. Foliation =													
		80-85°. F$_1$ = 0-10°. Small intervals of bleached phyllite													
		and massive sulfides.													
		137.3;141.5; 141.8													
		140.2-140.4: Bleached phyllite interval. Foliation 75-80°;													
		25° opposite direction of													

DDH: FAGU135 -- 42 DEGREE PROFILE

(VIEW AZIMUTH = 312 DEGREES)

ELEV:1103 592229E ; 905183N

PLUNGE ANGLE IS 11.0 TREND ANGLE IS 312.0

CORRECTED COLLAR POSITION: X = 589.0 Z = 1103.3

SECTION NAME: 80W

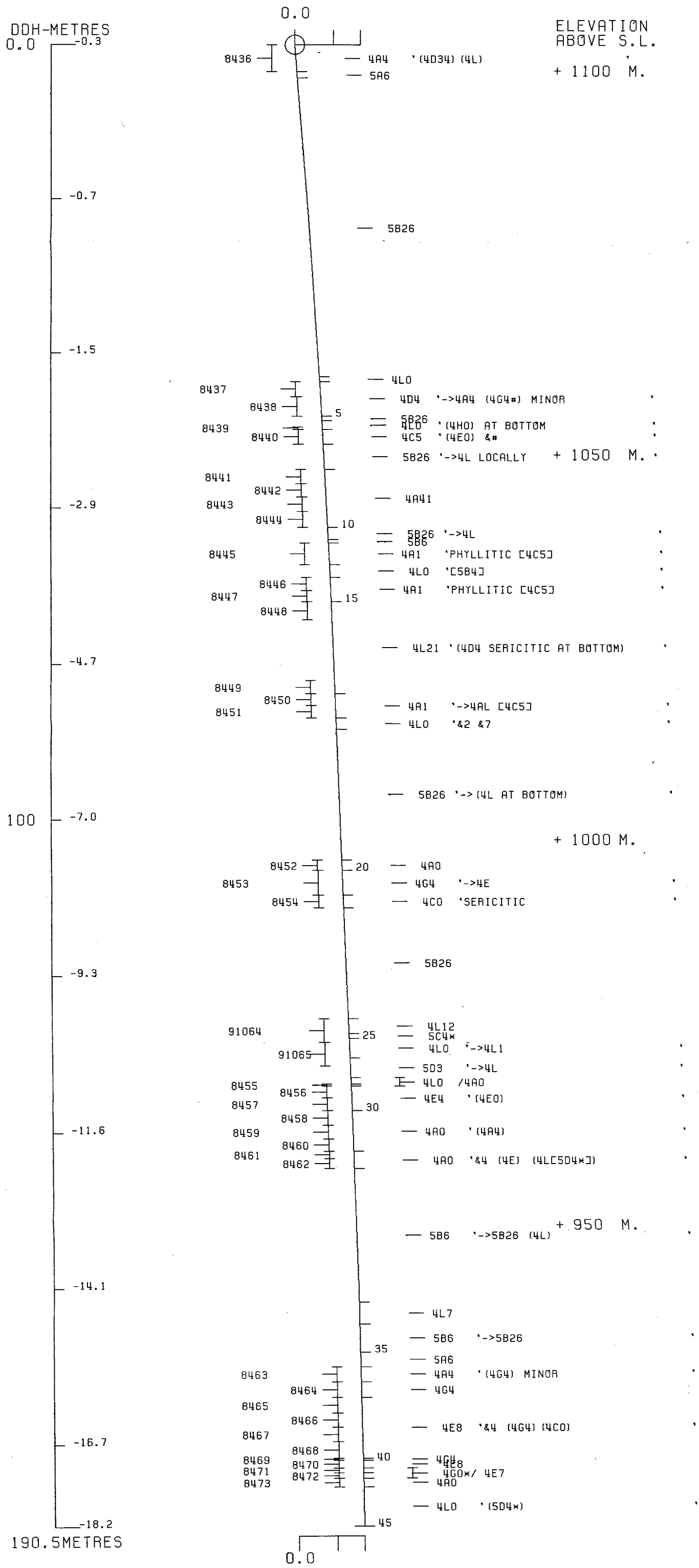

CYPRUS ANVIL MINING CORPORATION
PROGRAM DH162 29 JAN 1985 2:17 PM

DDH: FAGU135 -- 42 DEGREE PROFILE

(VIEW AZIMUTH = 312 DEGREES)

ELEV:1103 592229E ; 905183N

PLUNGE ANGLE IS 11.0 TREND ANGLE I I 312.0

CORRECTED COLLAR POSITION: X = 589.0 Z = 1103.3

SECTION NAME: 80W

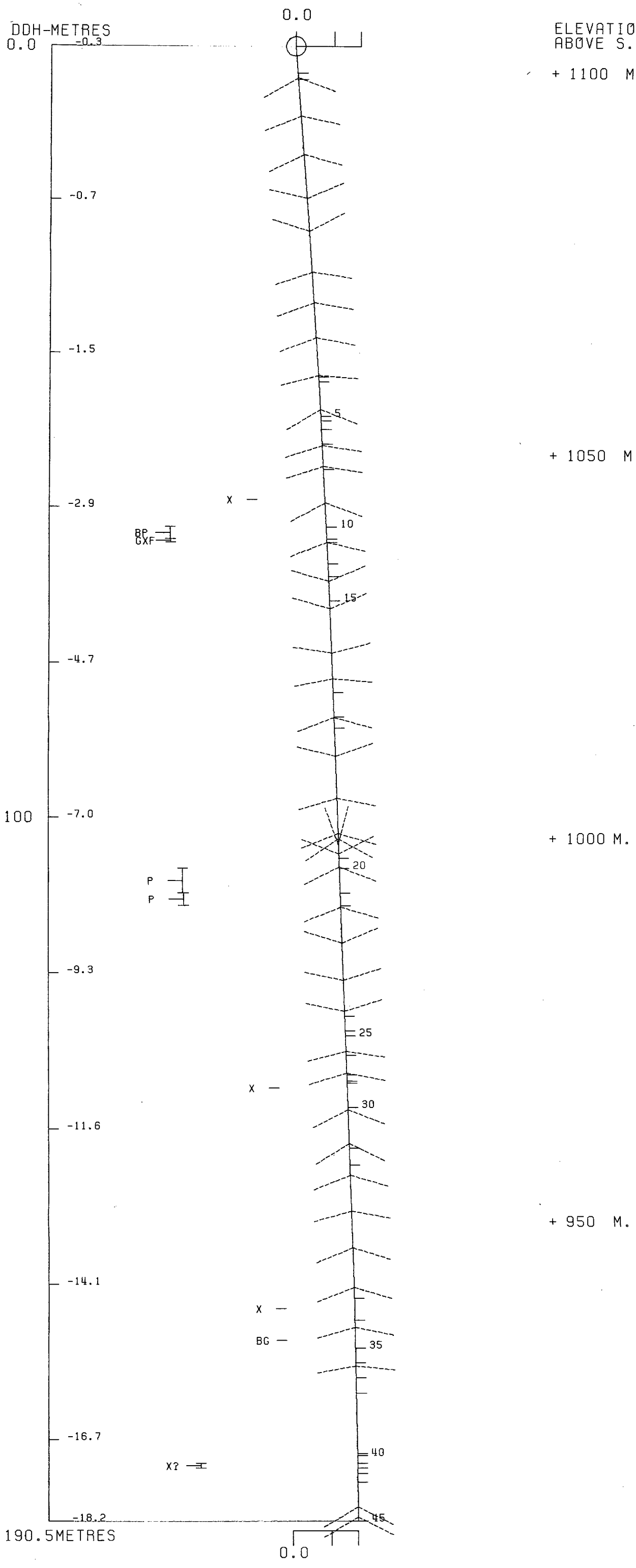

CYPRUS ANVIL MINING CORPORATION
PROGRAM DH161 31 JAN 1985 3:31 PM

76 U140

DRILL HOLE : FAGU140

NORTHING : 905,183.0

EASTING : 592,228.7

ELEVATION : 1,103.4

TOTAL DEPTH : 123.4

SECTION : W 80

R.F.E. : S2

RFE DIRECTION: 230

PLUNGE ANGLE : 11

PLUNGE DIRECT: 312

DHD CALC: 1

SS CALC: 0

DETAIL RECORD COUNTS:

NOS ORE-SAMPLES: 11

NOS DOWN-H-SURVEYS: 1

NOS DOWN-H-LITHOLOGY: 36

NOS DOWN-H-STRUCTURE: 35

NOS DOWN-H-FAULTS: 4

NOS DOWN-H-SPLINES: 1

NOS COMPOSITES: 0

DDH: FAGU140 UTM-N: 905,183.0 UTM-E: 592,228.7 UTM-ELEV: 1,103.4 TOTAL DEPTH: 123.4 SECTION: W 80
RFE: S2 RFE DIR: 230 PLUNGE ANGLES: 11 312 DHD CALC: 1 SS CALC: 0

DEPTHS FROM	DEPTHS TO	SAMPLE NO.	INT.	REC.	ROCK UNIT	ASSAYS S.G. PULP	CU %	PB %	ZN %	AG(AA) G/MT	AG(FA) G/MT	AU(FA) G/MT	PO %	PY %	TOT FE	BAO %	HG %	MN %	AS %	BA %	S.G. W.R.
.0	3.0	08082	3.0	1.2	4A4	3.18	.02	3.80	7.10	65.00		.48	2	7	9						
55.8	56.9	08083	1.1	1.1	4E4#	3.85	.05	7.60	20.00	123.00		.55	2	12	15						
59.7	61.8	08084	2.1	2.1	4A14	3.43	.11	3.60	4.50	61.00		1.44	1	15	16						
61.8	62.5	08085	.7	.7	4D4	3.55	.07	7.70	14.70	152.00		.55	1	10	11						
70.9	73.0	08086	2.1	2.1	4A4	3.01	.04	1.55	4.40	33.00		.34	2	5	7						
83.4	85.2	08087	1.8	1.8	4A4	3.07	.05	1.56	3.50	35.00		.48	5	5	10						
85.2	86.9	08088	1.7	1.7	5C4*	2.96	.05	.34	.56	10.00		.34	3	4	8						
86.9	87.8	08089	.9	.8	4D47	3.53	.09	6.10	7.30	93.00		1.17	6	12	18						
98.6	99.2	08090	.6	.6	4G4#																
100.9	101.6	08091	.7	.7	4L4		.21	1.13	2.04	24.00											
104.0	104.5	08092	.5	.5	4L14		.12	.79	1.55	20.00											
WEIGHTED AVERAGE																					
.0	3.0		3.0	1.2		3.18	.02	3.80	7.10	65.00		.48	2	7	9						
55.8	56.9		1.1	1.1		3.85	.05	7.60	20.00	123.00		.55	2	12	15						
59.7	62.5		2.8	2.8		3.46	.10	4.62	7.05	83.75		1.21	1	14	15						
70.9	73.0		2.1	2.1		3.01	.04	1.55	4.40	33.00		.34	2	5	7						
83.4	87.8		4.4	4.3		3.12	.05	2.01	3.14	37.20		.56	4	6	11						
98.6	99.2		.6	.6																	
100.9	101.6		.7	.7			.21	1.13	2.04	24.00											
104.0	104.5		.5	.5			.12	.79	1.55	20.00											

DDH: FAGU140 UTM-N: 905,183.0 UTM-E: 592,228.7 UTM-ELEV: 1,103.4 TOTAL DEPTH: 123.4 SECTION: W 80
RFE: 52 RFE DIR: 230 PLUNGE ANGLES: 11 312 DHD CALC: 1 SS CALC: 0

DEPTH	ZENITH	AZIMUTH
0.000	148.800	50.200

DDH: FAGU140 UTM-N: 905,183.0 UTM-E: 592,228.7 UTM-ELEV: 1,103.4 TOTAL DEPTH: 123.4 SECTION: W 80
RFE: S2 RFE DIR: 230 PLUNGE ANGLES: 11 312 DHD CALC: 1 SS CALC: 0

DEPTH	UNIT	CODE	DESC	RECOVERY	IND
3.0	0001	4A4		0.0	1
3.3	0002	5D4*		0.0	1
54.4	0003	3G0	&9(5D$)98:02	0.0	1
55.8	0004	3G4	->(4L0) NEAR BASE (10Q$)	0.0	1
56.9	0005	4E4#		0.0	1
57.6	0006	3G4		0.0	1
59.0	0007	3G0		0.0	1
59.7	0008	3G4	->(4L0)BASE	0.0	1
61.8	0009	4A14		0.0	1
62.5	0010	4D4		0.0	1
64.1	0011	4L0	&5 [5B64(5D4$)]	0.0	1
68.6	0012	3G0	&9	0.0	1
70.8	0013	3G9	(10Q$)	0.0	1
73.5	0014	3G96	&1 ->4A4 LOCALLY 50:50	0.0	1
74.6	0015	3G0	&9 MINOR	0.0	1
83.4	0016	3G9$		0.0	1
85.2	0017	4A4	(5C*4)	0.0	1
86.9	0018	5C4*	(4A3) [4L6(4A3)]	0.0	1
87.8	0019	4D47		0.0	1
92.9	0020	4L14	&2 (10Q0)	0.0	1
93.5	0021	3G4		0.0	1
94.4	0022	3G0		0.0	1
95.2	0023	5D4*	(3G4)	0.0	1
98.2	0024	3G0	(10Q0)	0.0	1
99.2	0025	4G4#		0.0	1
99.4	0026	4C0		0.0	1
99.9	0027	5D4*	(5C*4)(3G16)	0.0	1
100.3	0028	3G9		0.0	1
100.9	0029	3G4	&1 &6	0.0	1
101.6	0030	4L4		0.0	1
102.0	0031	5C$4		0.0	1
102.7	0032	4L241	[4C0] (5D4*)(5C4*)	0.0	1
102.9	0033	3G9		0.0	1
104.0	0034	4L12	&4 (5D4*)	0.0	1
104.5	0035	4L147		0.0	1
123.4	0036	3G0	&9 (3B$)(10Q$) 95:02:03	0.0	1

DDH: FAGU140 UTM-N: 905,183.0 UTM-E: 592,228.7 UTM-ELEV: 1,103.4 TOTAL DEPTH: 123.4 SECTION: W 80
RFE: S2 RFE DIR: 230 PLUNGE ANGLES: 11 312 DHD CALC: 1 SS CALC: 0

DDH	F DEPTH	T DEPTH	FEAT	SYMTRY	S0 ANGLE	S0 DIRECT	S1 ANGLE	S1 DIRECT	S2 ANGLE	S2 DIRECT	RFE CDE	DHDC	SDC	PROCESS
FAGU140	0.0	3.4	CS2		0	0	0	0	52	230	C	1	0	0
FAGU140	0.0	7.7	CS2		0	0	0	0	55	230	C	1	0	0
FAGU140	0.1	8.3	CS2	Z	0	0	0	0	0	0	C	1	0	0
FAGU140	8.3	9.0	CS2	S	0	0	0	0	0	0	C	1	0	0
FAGU140	0.0	13.7	CS2		0	0	0	0	56	230	C	1	0	0
FAGU140	0.0	18.5	CS2		0	0	0	0	61	230	C	1	0	0
FAGU140	0.0	24.4	CS2		0	0	0	0	64	230	C	1	0	0
FAGU140	0.0	30.5	CS2		0	0	0	0	70	230	C	1	0	0
FAGU140	0.0	37.9	CS2		0	0	0	0	56	230	C	1	0	0
FAGU140	0.0	43.4	CS2		0	0	0	0	68	230	C	1	0	0
FAGU140	0.0	49.0	CS2		0	0	0	0	72	230	C	1	0	0
FAGU140	0.0	53.9	CS2		0	0	0	0	60	230	C	1	0	0
FAGU140	9.8	55.8	CS2	Z	0	0	0	0	0	0	C	1	0	0
FAGU140	0.0	56.5	PS2		0	0	0	0	59	230	C	1	0	0
FAGU140	55.8	58.9	PS2	P	0	0	0	0	0	0	C	1	0	0
FAGU140	58.9	61.8	CS2	Z	0	0	0	0	0	0	C	1	0	0
FAGU140	61.8	62.5	PS2	P	0	0	0	0	0	0	C	1	0	0
FAGU140	0.0	64.6	CS2		0	0	0	0	81	230	C	1	0	0
FAGU140	62.5	66.4	CS2	Z	0	0	0	0	0	0	C	1	0	0
FAGU140	0.0	68.9	PS2		0	0	0	0	70	230	C	1	0	0
FAGU140	66.4	69.2	PS2	P	0	0	0	0	0	0	C	1	0	0
FAGU140	0.0	73.9	CS2		0	0	0	0	52	230	C	1	0	0
FAGU140	0.0	79.5	CS2		0	0	0	0	63	230	C	1	0	0
FAGU140	0.0	83.3	CS2		0	0	0	0	78	230	C	1	0	0
FAGU140	69.2	86.9	CS2	Z	0	0	0	0	0	0	C	1	0	0
FAGU140	86.9	87.8	PS2	P	0	0	0	0	0	0	C	1	0	0
FAGU140	0.0	88.9	CS2		0	0	0	0	78	230	C	1	0	0
FAGU140	0.0	94.0	CS2		0	0	0	0	79	230	C	1	0	0
FAGU140	87.8	98.6	CS2	Z	0	0	0	0	0	0	C	1	0	0
FAGU140	98.6	99.2	PS2	P	0	0	0	0	0	0	C	1	0	0
FAGU140	0.0	100.1	CS2		0	0	0	0	81	230	C	1	0	0
FAGU140	0.0	105.4	CS2		0	0	0	0	71	230	C	1	0	0
FAGU140	0.0	113.4	CS2		0	0	0	0	64	230	C	1	0	0
FAGU140	0.0	121.6	CS2		0	0	0	0	70	230	C	1	0	0
FAGU140	99.2	123.4	CS2	Z	0	0	0	0	0	0	C	1	0	1

DDH: FAGU140 UTM-N: 905,183.0 UTM-E: 592,228.7 UTM-ELEV: 1,103.4 TOTAL DEPTH: 123.4 SECTION: W 80
RFE: S2 RFE DIR: 230 PLUNGE ANGLES: 11 312 DHD CALC: 1 SS CALC: 0

DDH	F DEPTH	T DEPTH	FEAT	REC CD	PARLL	UPPER PLANE		INTERNAL PLANE		LOWER PLANE		DHD
FAGU140	20.9	21.2	G1F			61	0	0	0	64	0	1
FAGU140	35.6	35.9	G1F			56	0	0	0	56	0	1
FAGU140	0.0	72.1	X			0	0	0	0	0	0	1
FAGU140	0.0	82.3	1G			0	0	0	0	0	0	1

CYPRUS ANVIL MINING CORPORATION

DIAMOND DRILL CORE LOG

Hole Number: 76-U140

Project: GRUM

Location: VANGORDA PLATEAU

Claim:

UTM
Terr. Plane Co-ords.: 6,905,183.04 N

592,228.71 E

Grid Co-ords.: 80W/7N

Elevation: 1103.9

Total Depth: 123.4 m

Fabric Orientation Diagram:

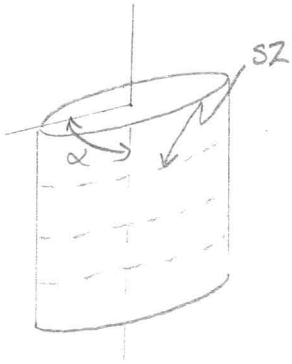

All symmetry determinations looking

NW with SZ dipping

SW with dip azimuth 230.

Purpose:

RE
Logged by: PN

Date(s) Logged: JULY 2-4/80

Drilling Contractor:

Core: Size From To Collar Cased and Capped:

BQ 0 EOH

Started: 4/8/76 Completed: 16/8/76

Cyprus Anvil Mining Corp.
Diamond Drill Core Log

DDH 76-U140

Code	Drillhole	Elevation	Northing	Easting	Comments
1	2 8	10 16	17 24	25 32	34 48
T	76-U140	1103.9	9051830	592228.7	MGTRES

change to 50.2

to correspond to True North rather than UTM North

Code	Drillhole	Depth	Zenith Angle	True Azimuth	Comments
1	2 8	10 14	22 26	28 32	34 56
R	76-U140	0 0	148.8	48.6	ATCOLLAR
R		.	.	.	
R		.	.	.	
R		.	.	.	
R		.	.	.	
R		.	.	.	
R		.	.	.	
R		.	.	.	
R		.	.	.	
R		.	.	.	
R		.	.	.	
R		.	.	.	
R		.	.	.	
R		.	.	.	
R		.	.	.	
R		.	.	.	

Code	Drillhole	Comments, Errant Remarks, Snivellings and/or Lewd Suggestions
1	2 8	10 47

DDH FAGU140 (2–8) **Cyprus Anvil Mining Corp.** Page 1 of ____

Re-Re-Re - **Lithologic Log** Date: 30 Aug 82 Logged By: DSJ/GAJ

anybody care to try again?

Code	From	To	Recov.	No.	Unit	Description
1	10–14	16–20	22–24	26–28	30–34	35
L	00	30		1	#	sulfides core missing
L	30	33		2	SD4*	weak fuch - rusty beige color
L	33	544		3	3G0	±9 (SD*dol) 98:2 minor OQ0±*±chl
						normal, weak - mod striped w S_2 ‖
						carb folia - generally intact, local S_2 ‖
						gouge @ 20.9-21.2 = incip ‖ S_2 also
						35.8-35.9 = incip ‖ S_2 = minor faults
L	544	558		4	3G4	⇒ toward base (4L0)(OQ*dol) intact
L	558	569		5	#	sulfides - core missing
L	569	576		6	3G4	weak bleaching as unit 4, intact
L	576	590		7	3G0	intact
L	590	597		8	3G4	⇒ base (4L0) no sulfides
L	597	625		9	#	sulfides core missing
L	625	641		10	4L0	±5 problematic unit w. pinkish beige
						to lt greenish grey carbonated = ±5 wall
						rx or weakly bleached SD - is
						good SD4*dol and OQ*dol in last 0.5m. OI
						v minor py to no sulfides and veinlets in 4L only
						weak.
						pinkish beige probable carbonate is in irregular
						blotches to patches and shows a weak imperfect spatial
						association with pyrite and appears to
						be locally carbonate metasomatized 3G
						perhaps taking advantage of more
						porous siltstone bands though there is
						not a well defined association between "carbonate"
						and obvious siltstone bands/lithons. "Carbonate"
						does not fizz in 20% HCl
L	641	686		11	3GP	±9 ← minor, ps_2 foliated v. weakly striped thin
						<1mm carb. folia intact tr OQ*dol
L	686	708		12	3G9	(OQ*dolo) ±*v. minor in qtz siltstone bands. throut interval
						intact
L	708	735		13	3G9,6	±1 locally → 4A ~50% of unit fairly
						reasonable 4A remainder dk grey carbonaceous
						variably siliceous phyllite similar to 5A19
						4A like rx in upper .3m

4 this hole you will have to use this version and fill in the missing sulfide intersections with PN's log

DDH FAGU140 (2–8)

Cyprus Anvil Mining Corp.

Lithologic Log

Page _____ of _____

Date: _____ Logged By: _____

Code	From	To	Recov.	No.	Unit	Description
1	10–14	16–20	22–24	26–28	30–34	35
						and middle .5m tot S= 20-25% Py≈2-3X sphal
						in 4D
						in 3696±1 tot S= <5% py dominant
						py in qtz lamine ∥S2 ± dolomite
L	735	746		14	360	±9 ← minor - unit slightly bleached
						but not convincingly.
L	746	834		15	369*	dol homog dk grey to locally black w
						lt to med grey strongly dolomitic
						qtz sstn bands. unit broadly
						striped by sstn bands/lithons
						but not by dk grey S2 folia.
L	834	878		16	#	sulfides no core.
L	878	929		17	4L14	±2 (000) upper ½ more siliceous
						and w more basemetals -
						grades down to pinkish beige
						mottled 4L possibly after 5D??
						good lithon struct in 4L similar
						to enclosing wall rx and presumably
						derived from them, intact
L	929	935		18	364	intact
L	935	944		19	360	
L	944	952		20	5D4*	(364) 5D4* normal pinkish beige color.
						94.6-95.1 w ~0.2m bleached
						364 margins either side.
						bleaching perhaps suggests carbonation
						of metavolc as extended out from
						the metavolcs into pelites producing
						enigmatic 4L blotchy
L	952	982		21	360	(000) intact normal
L	982	992		22	#	sulfides see P.N. log.
L	992	994		23	4C0	continuation of ↑, lt cream grey
						poor banding, tot S= 25-30%,
						py > sphal, not good ex text.
L	994	999		24	5D4*	(5C*4)(3616) subequal proportions
						5D in M region - has characteristic
						color - 5C mottled & fuchitic

DDH FA6U140 (2–8)

Cyprus Anvil Mining Corp.

Lithologic Log

Page 3 of ____

Date: ____ Logged By: ____

Code	From	To	Recov.	No.	Unit	Description
1	10–14	16–20	22–24	26–28	30–34	35
						6 in 36 py:chalc:sphal 15-20 Tot 5=
						dissem throughout unit -
						wall rx mineraliz. - rx ltgrey
						poorly banded.
L	999	1003		25	369	normal, intact
L	1003	1009		26	364	±1 ± 6 minor 6= py sphal.
						appears to be silicif. v. weakly
						mineralized 36 → down hole to
						0.1 m of 4L at EOI
L	1009	1016		27	#	sulfides - see pN log.
L	1016	1020		28	5C*4	dolo - mottled, fuchitic
L	1020	1027		29	4L24	1←[4C0] (SD4*) (SC4*) complexly interleaved
						lithologies 90% 4L ..., 4L is typical
						cream green color - poor banding
						poor ex text probably silicif-mineralized
						wall rx.
L	1027	1029		30	369	
L	1029	1040		31	4L12	±4 minor (SD4*) similar to unit 29
L	1040	1045		32	#	Sulfides - core missing
L	1045	1234		33	360	±9 minor (3B*dolo) minor 95:2 (OQ*) 3%
						locally and variably bleached to 364
						grading in and out over 1 m
						streches, intact - no faults -
						NB
						few faults in the entire hole

DDH 76-014 (2 8)

Cyprus Anvil Mining Corp.
Lithologic Log

Logged By: PN

	Code	From	To	Unit	Code	Description
	1	10 14	16 20	22 23	25 27	
	L	10.0	13.0	1	4A4	10% PbZn; red sph; minn graphite bands; approaching 4D4 except for C content.
	L	13.0	44.4	2	5A6	altered (bleached) slightly calcareous 5DO w/ manganosite & py blebs 3.0-3.2 m; 5DO interbanded w/ 4D4 from 3.8-3.9 m; 4L0 from 3.7-3.8 m; minor py stringers as well as py assoc. w/ qtz fracture fillings; few calcareous blebs assoc. w/ qtz veins;
	L	44.4	54.4	3	5B6	pale green 5D1 w/ py blebs from 6.1-6.5 m; generally non-calcareous except for few calcareous blebs & fracture fillings; variable graphite content; appears to decrease toward bottom of unit; minor thin qtz veins w/ associated chlorite and carbonate; from 18.4-18.8 m. laminated chloritic-sericitic-qtzitic calcareous interval w/ po blebs in qtz bands; minor po blebs; 36.2-36.5 m. non calcareous chloritic-sericitic-qtz interval w/ py stringers; calcareous chl-ser-qtz interval from 46.7-47.1, 47.3-47.6, 51.4-51.9 m;
	L	54.4	58.8	4	4L6	0P0 w/ py & calcite blebs 55.2-55.4 m;
NB *	L	55.8	56.9	5	4E4	* Minor calcite @ 56.3 assoc. with magnetite band 0.1m thick, mgt. to 1mm grains; 2 Ndy po at end of section replacing py. Silica frags. at top & bottom of section give 4K appearance (20% PbZn)
	L	56.9	58.9	6	5B2	very slightly calcareous; 4L6 from 57.2-57.6 m [584]
	L	58.9	59.7	7	4L3	chloritic to 59.3 m; py-carbonate fracture fillings [584]
*	L	59.7	61.8	8	4A4	PbZn; red sph;
	L	61.8	62.5	9	4D4	10% PbZn; red sph; minn calcite blebs; <1cm + fuchsite spots.
	L	62.5	64.1	10	4L3	minor py stringers; light brown 5D6 w/ py from 63.8-64.0 m;
	L	64.1	68.6	11	5B2	minn py stringers, po blebs; non-calcareous except for few calcite blebs;
	L	68.6	70.9	12	5A10	few py stringers; very slightly calcareous; minn qtz bands;
	L	70.9	73.0	13	4A10	1% PbZn; red sph; approx. 4% py; brecciated from 72.1-72.2 m; 70.9-72.1 4A4; 72.1-72.8 5A19 phyllitic. 4A4 @ end of section.
	L	73.0	73.5	14	5A10	very slightly calcareous; minn py blebs, ↖ tbs steak!
	L	73.5	74.6	15	5B2	non-calcareous; minn py stringers; py blebs assoc. w/ qtz-calcite bands;
	L	74.6	83.4	16	5A9	variably calcareous (non- to slightly); qtz bands w/ diss. py, sph, gal; <1% PbZn; minor gouge at 82.3 m;
*	L	83.4	85.2	17	4A4	(5C*4) fuchsitic red sph; bands of slightly calcareous, altered,

DDH 76-U140 (2–8)

Cyprus Anvil Mining Corp.
Lithologic Log

Logged By: PN

Code	From	To	Unit	Code	Description
1	10–14	16–20	22 23	25–27	
					bleached ~~5DO~~ 5C with mariposite 83.8–84.0m, 84.2–84.5,
					84.7–85.0m; minor cpy;
L	85 2	86 9	18	4L6	(4A3) 86.4–86.6m; minor py blebs & qtz veins. This unit similar to previous except more altered 5C.
NB * L	86 9	87 8	19	4D4	7 Latter 0.3m of unit po bearing; minor sericite development;
L	87 8	92 7	20	4L3	OQO 88.3–88.9m; minor py, sph & gal blebs in
					qtz bands; bt-rich 91.6–92.1m; non-calcareous
					except for few calcite blebs (mainly in bt-rich interval);
L	92 7	93 5	21	4L6	minor py, po stringers; qtz bands;
L	93 5	94 4	22	5B6	very few calcite blebs assoc. w/ qtz bands;
					minor py blebs & stringers;
L	94 4	95 2	23	4L0	light brown 5DO w/ minor calcite blebs 94.6–95.1m;
L	95 2	97 8	24	5B0	very slightly calcareous, minor py blebs,
L	97 8	98 6	25	0Q0	
L	98 6	99 2	26	4G4	10% PbZn; honey-coloured sph; calcareous;
NB → * L	99 2	100 0	27	4L5	1% PbZn; red sph; 5DO w/ mariposite/ank. from 99.5–
					99.7m; 3cm of 4A4 at top of section.
L	100 0	100 5	28	5A1	minor py;
NB Addendum * L	100 5	104 6	29	4L4	2% PbZn; red sph; 5DO w/ mariposite 101.9–102.1m;
					5A6 102.9–103.1m; po-bearing from 104.3–104.6m;
L	104 6	105 2	30	5B2	non-calcareous; minor py; [non calc 5B! – nice job pattie]
L	105 2	123 4	31	5B0	very slightly calcareous; minor po blebs; 4L27 107.3–
					107.8m; more calcareous from 116.2–121.0m; chloritic
					from 116.2–123.4m; bt-rich 116.2–119.1m; 4L6
					from 120.9–122.3m;
		EOH			Bull poop!

DDH 76U-140 (2–8) Addendum

Cyprus Anvil Mining Corp.

Lithologic Log

Page 5 of 9

Date: Aug 4/81 Logged By: RST

not calc A-hole →

Code	From	To	Recov.	No.	Unit	Description
1	10–14	16–20	22–24	26–28	30–34	35
	1003	1009			5B4	(4L) Increasing alteration from top to bottom of this unit sericitic increasing tho' retaining 5B texture. Lower cut. qtz vein
	1009	1016			4L4	
	1016	1030			5C4*	mott. (5A) gouge? Lower 0.2m of section highly sheared 5A c̄ ankerite veinlets poss. fault. Major part of section typical 5C4* mott with fuchsite laminae. Buff-tan
	1030	1040			4L5	Buff-tan sericitic 4L with incipient CO_3 narrow gouge
	1040	1045			4L14	po as 3cm band in central portion of unit.

DDH 76-U140 (2 / 8)

Cyprus Anvil Mining Corp.
Structural Log

Logged By: PN

Code	From	To	Feature	Sym	S_1 Dip Direct.	S_2 Dip Direct.	Description
1	10 14	16 20	22 24	26	28 32	34 38	
S		3.4	CS12			512 2310	minor P region 6.8 – 7.1m;
S		7.7	CS12			515 2310	
S		8.3	FZ23				S sym. 8.3 – 9.0m;
S		9.0	FZ2S				Z sym. 9.0 – 55.8m; minor S sym. at 17.2, 24.5; P regions at 23.7, 26.6–27.3, 38.1 – 38.5, 52.0, & 52.8 – 53.0 m; S3 at 46.0, 54.0m;
S		13.7	CS12			516 2310	
S		18.5	CS12			611 2310	
S		24.4	CS12			614 2310	
S		30.5	CS12			710 2310	
S		37.9	CS12			516 2310	
S		43.4	CS12			68 2310	
S		49.0	CS12			712 2310	
S		53.9	CS12			610 2310	
S		55.8	FZ2Z				R region 55.8 – 56.9m; massive sulph.
S		56.9	FZ2R				P region 56.9 – 58.9m;
S		56.5	PS12			59 2310	
S		58.9	FZ2P				Z sym. 58.9 – 61.8m;
S		61.8	FZ2Z				R region 61.8 – 62.5m; massive sulph;
S		62.5	FZ2R				Z sym. 62.5 – 66.4m;
S		64.6	CS12			811 2310	
S		66.4	FZ2Z				P region 66.4 – 69.2m;
S		68.9	PS12			710 2310	
S		69.2	FZ2P				Z sym. 69.2 – 86.9m; minor P region 73.6 – 74.0m;
S		73.9	CS12			512 2310	
S		79.5	CS12			613 2310	
S		83.3	CS12			718 2310	
S		86.9	FZ2Z				R region 86.9 – 87.8; massive sulphides;
S		87.8	FZ2R				Z sym. 87.8 – 98.6m; S3 at 93.8m;
S		88.9	CS12			718 2310	
S		94.0	CS12			719 2310	
S		98.6	FZ2Z				R region 98.6 – 99.2m; massive sulph;
S		99.2	FZ2R				Z sym. 99.2 – 123.4m;
		101.0	CS12			811 2310	

DDH 76-V-140 (2 / 8)

Cyprus Anvil Mining Corp.
Structural Log

Logged By: PN

Code	From	To	Feature	Sym	S_1 Dip Direct.	S_2 Dip Direct.	Description
1	10 14	16 20	22 24	26	28 32	34 38	
S		1054	CSIZ			7121 2310	
S		1134	CSR			64 2310	
S		1216	CSR			70 2310	
S		EOH					

NB original please return to RST

DDH 764-140 (2 / 8) Cyprus Anvil Mining Corp

Logged by RST

ASSAY LOG (SAMPLER'S COPY) Date _____ Sampled by _____

CODE	FROM	TO	SAMPLE	INTR.	REC (m)	UNIT	DESCRIPTION
1	10 14	16 20	22 26	28 30	32 34	36 40	42
P	100	130	80812	30	12	4A4	Poor Recovery.
P	558	569	80813	11	11	4EA*	
P	597	618	80814	21	21	4A14	
P	618	625	80815	07	07	4D4	
P	709	730	80816	21	21	4A0	
P	834	852	80817	18	18	4A4	(5C*4)
P	852	869	80818	17	17	4L6	(4A3)
P	869	878	80819	09	08	4D47	
P	986	992	80910	06	06	4G4	
P	1009	1016	80911	07	07	444	
P	1040	1045	80912	05	05	4L147	
							NB Mush units too short so no rep sample taken.

Metres

DDH 76-041-40 (2 / 8)

Cyprus Anvil Mining Corp.
Geochemical Log (Sampler's Copy)

Logged By: PN

Sampled By: I

Code	From	To	Sample No.	Description			
1	10 14	16 20	22 27		LENGTH	REC.	UNIT
P	0	30	401914	K.A.	3.0	0.9	4A4
P	558	568	401915	K.A.	1.0	1.0	4K4
P	598	625	401916	K.A.	2.7	2.4	4A0/4D4
P	834	864	401917	K.A.	3.0	3.0	4A4/4L6
P	864	875	401918	K.A.	1.1	1.1	4L6/4DL
P	980	1000	401919	K.A.	2.0	1.2	4G4/4LD
P	1006	1021	411010	K.A.	1.5	1.5	4L4
P	1021	1043	411011	K.A.	2.2	2.0	4L4

DDH EAG.U.140 (2 Meters 8)

Cyprus Anvil Mining Corp.

Structural Log

Page _____ of _____

Date: _____ Logged By: _____

Code	From	To	Feature	Sym	S_0 Dip Direct.	S_1 Dip Direct.	S_2 Dip Direct	Description
1	10 14	16 20	22 24	26	28 32	34 38	40 44	
F	209	212	GLF		61 RFE		61 RFE	gouge S_2 // incap
F	358	359	GLF		SB RFE		SB RFE	" " "
F		721	X					bxia
F		823	1G					gougi minor

C.A.M.C. 1981 - E - 4

DIAMOND DRILL RECORD

LOGGED BY ALEXANDER YOUNG PO

D.D.H. Nº 76-U-140 PAGE 1

PROPERTY GRUM JOINT VENTURE

LATITUDE 10,978.484 80W STARTED AUGUST 4, 1976

DEPARTURE 7,540.686 7N COMPLETED AUGUST 16, 1976

ELEVATION 1,110.904 PROPOSED DEPTH 650' - 198.12

ULTIMATE DEPTH - 123.4

HOLE SURVEY:		
DEPTH	BEARING	DIP
COLLAR	50° 09'	-58° 45'

CLAIM Nº

N

DIRECTION AND DISTANCE FROM N.E. CLAIM POST

TOTAL CORE RECOVERY: 94.4%

Interval From	Interval To	DESCRIPTION	Recovery	Sample Nº	Interval From	Interval To	Sample Length	Assay Pb	Assay Zn	Assay Ag	Assay Au	Assay Cu	Assay x Pb	Assay x Zn	Assay x Ag
0	3.0	GRAPHITIC QUARTZ-SULFIDE (PG). Broken core. Foliation 35 12	0.9	4094	0	3.0	3.0	4.08	8.19	63.43					
		= 40-45°. Interlamination of sulfides/quartz and graphite.													
		No clear F / F relationship noted. Extreme low core recov.													
		3.0: Sharp contact with bleached phyllite (Sb) = 50°.													
			0.4		3.0	3.5	0.5								
3.0	3.5	BLEACHED PHYLLITE. Competent. Partly with weak minerali-													
		zation Py: 5%, Zn+Pb: 1%. Foliation = 50°, F = 40-45° (?)													
		not very distinct.													
		3.5: Sharp contact with Graphitic Phyllite = 50°.													
3.5	7.6	GRAPHITIC PHYLLITE (G). Broken blocky core easily breaks	3.5		3.5	7.6	4.1								
		into poker chips. Foliation = 45°. F = 10°. Short inter-													
		val of bleached phyllite = 5cm.													
		7.6: Decrease in graphitic constituents. Rx becoming dark													
		sericite phyllite with trace graphite (S+G).													

LOGGED BY _____ D.D.H. Nº 76-U-140 PAGE 2

Interval From	Interval To	DESCRIPTION	Recovery	Sample Nº	Interval From	Interval To	Sample Length	Assay Pb	Assay Zn	Assay Ag	Assay Au	Assay Cu	Assay x Pb	Assay x Zn	Assay x Ag
7.6	58.5	DARK SERICITE PHYLLITE WITH TRACE GRAPHITE (S+G). Fissile,	47.3		7.6	55.8	48.2								
		easily breaks into poker chip. Foliation = fissility =													
		65-70°. F = 0-10°. Calcite as stringers in random orien-													
		tation. Isolated clots of Po.													
		35.6: Shear.													
		55.8-56.8: Mineralized interval (PG). Competent. Compo-													
		sitional banding in wide sulfide bands = 75-80°. 45 15	1.0	4095	55.8	56.8	1.0	7.05	16.64	114.86			7.05	16.64	114.86
		Both contact appear sharp and clean but broken core-no	1.6		56.8	58.5	1.7								
		angle measurement possible.													
		58.5: Gradual change to Bleached Phyllite (Sb).													
58.5	59.8	BLEACHED PHYLLITE (Sb). Easily breaks into poker chips.	1.0		58.5	59.8	1.3								
		Light gray with buff laminae. Thin flakes have silvery white													
		colour. Foliation = fissility = 75-80°; F = 0-5°.													
		59.8: Sharp clean contact with mineralized graphitic phyl-													
		lite (PG) = 80°.													
59.8	62.5	MINERALIZED GRAPHITIC PHYLLITE (PG). Competent. 45 15	2.4	4096	59.8	62.5	2.7	5.48	7.84	77.83			14.8	21.17	210.14
		Foliation = 75-80°; same angle for some compositional bands		W.Av.	55.8	62.5	6.7	3.26	5.64	48.5			21.85	37.81	325.00
		in wider sulfide spans.													
		61.0: Fold nose.													
		62.5: Sharp contact with bleached phyllite (Sb) = 80°.													

LOGGED BY _____ D.D.H. NO 76-U-140 PAGE 3

Interval From	Interval To	DESCRIPTION	Recovery	Sample NO	Interval From	Interval To	Sample Length	Assay Pb	Assay Zn	Assay Ag	Assay Au	Assay Cu	Assay x Pb	Assay x Zn	Assay x Ag
62.5	64.0	BLEACHED PHYLLITE (Sb). Competent-good long core. Buff with	1.5		62.5	64.0	1.5								
		greenish gray hue. Foliation = 80-85°; F$_1$ = 0-5°.													
		64.0: Sharp change to Graphitic Sericite Phyllite (SG).													
		Contact marked by bull quartz = 85°.													
64.0	83.4	GRAPHITIC SERICITE PHYLLITE (S)(G). Competent. Foliation =	18.5		64.0	83.4	19.4								
		80-85°; F$_1$ = 0-5°.			(70.1	73.2)		1 PZ	est.						
		70.1-73.2: Widely spaced sulfide laminae PY: 4%, PbZn: 1%													
		Spots of Po = 1%, occassionally with Py.													
		74.7-79.2: Series of small noses marked by F$_1$.													
		83.4: Gradual increase in mineralization. Rx becoming													
		mineralized graphitic phyllite (PG).													
83.4	87.5	MINERALIZED GRAPHITIC PHYLLITE (PG). Competent. 20 3	3.0	4097	83.4	86.4	3.0	0.88	1.46	58.63					
		Foliation = 85-90° followed by sulfides. 25 5	1.1	4098	86.4	87.5	1.1	3.98	5.20	16.11					
		83.8-84.8: Bleached Phyllite interval. Competent. Folia-													
		tion = 85-90°; F$_1$ = 0-5°. White to buff with greenish hue.													
		Po in spots = 1%. First contact = 85°, second contact = 80°.													
		87.5: Gradual change to bleached Phyllite (Sb). Decrease													
		in graphitic and sulfides constituents.													

LOGGED BY _____ D.D.H. NO 76-U-140 PAGE 4

Interval From	Interval To	DESCRIPTION	Recovery	Sample NO	Interval From	Interval To	Sample Length	Assay Pb	Assay Zn	Assay Ag	Assay Au	Assay Cu	Assay x Pb	Assay x Zn	Assay x Ag
87.5	95.6	BLEACHED PHYLLITE (Sb) W/intercalated intervals of sericite	8.1		87.5	95.6	8.1								
		phyllite (S). Contacts are gradual. Bleached phyllite has													
		buff thin laminae with greenish hue (not fuchsite-could be													
		inter-stacked minute chlorite flakes). Foliation = 85-90°;													
		F = 0-5°.													
		93-94: Sericite phyllite interval. Competent.													
		94.5-95.0: Tuffaceous looking groundmass in bleached													
		phyllite. Trace calcite. Foliation = 90°; F =0°													
		95.6: Gradual change to Sericite Phyllite (S).													
95.6	98.0	SERICITE PHYLLITE (S). Competent. Foliation = 85-90°;	2.4		95.6	98.0	2.4								
		F = 0-5°. Minor sporadic sulfide clots.													
		98.0: Sharp contact with Massive Sulfide (M). Contact													
		marked by long interval of bull quartz. Contact @													
		98.7 = 85°.													
98.0	104.3	MASSIVE SULFIDE ZONE (M) GRADING INTO QUARTZ SULFIDE 60 8	1.2	4099	98.0	100.0	2.0	3.63	6.53	53.49			7.26	13.06	106.98
		AND BLEACHED PHYLLITE (P-Sb). With intercalated short 25 6	1.5	4100	100.6	102.1	1.5	0.91	0.80	17.14			1.70	PbZn	
		run of graphitic phyllite. 20 2	2.0	4201	102.1	104.3	2.2	0.35	0.53	5.14			0.88	PbZn	
		98-99.2: Massive sulfide (M). Competent. Compositional													
		band = 80-85°. Gradual change to Quartz-sulfide		W.Av.	100.6	104.3	3.7	1.22	PbZn						
		and with bleached Phyllite (P-Sb).		W.AV.	98.0	101.0	3.0	2.72	4.62	41.4			8.17	13.86	124.12

LOGGED BY _____ D.D.H. Nº 76-11-140 PAGE 5

Interval From	Interval To	DESCRIPTION	Recovery	Sample Nº	Interval From	Interval To	Sample Length	Assay Pb	Assay Zn	Assay Ag	Assay Au	Assay Cu	Assay x Pb	Assay x Zn	Assay x Ag
		100-100.5: Graphitic phyllite interval. Barren. Foliation													
		= 85-90°. First contact sharp = 80°;													
		Second contact broken ground.													
		100.5-104.3: Interval of alternating span of quartz-sulfide													
		and mineralized bleached Phyllite (P-Sb).													
		Contacts are gradual. Fuchsites in bleached													
		phyllites. Foliation = 75-85°. Po @ 104 = 0.5													
		104.3: Sharp contact with dark graphitic sericite phyllite													
		(SG) = 70°.													
104.3	120.4	DARK GRAPHITIC SERICITE PHYLLITE (SG). Competent. Foliation	16.1		104.3	120.4	16.1								
		= 80-85°; F_1 = 0-5°. Trace of calcite in groundmass @ 114.3													
		-118.9.													
		120.4: Transition to Sericite Phyllite (S).													
120.4	123.4	SERICITE PHYLLITE (S). Competent. Foliation = 75-80°.	3.0		120.4	123.4	3.0								
		Has some thin chlorite laminae. F_1 not very well developed,													
		could be 0° at 121.7.													
	123.4	END OF HOLE. NOTE: Driller dropped rod. Tried fishing w/													
		bell tap and was unsuccessful. Hole begun caving in.													
		Finally decided to abandon hole. Also considered wedging													

LOGGED BY _____ D.D.H. NO 76-U-140 PAGE 6

Interval From	Interval To	DESCRIPTION	Recovery	Sample NO	Interval From	Interval To	Sample Length	Assay Pb	Assay Zn	Assay Ag	Assay Au	Assay Cu	Assay x Pb	Assay x Zn	Assay x Ag
		but there is no guarantee it will stay on section (no													
		driller around with good wedging experience.													
		August 17, 1976, Alex y. po													

76 U142

DRILL HOLE : FAGU142

NORTHING : 905,180.9

EASTING : 592,226.2

ELEVATION : 1,103.7

TOTAL DEPTH : 152.4

SECTION : W 80

R.F.E. : S2

RFE DIRECTION: 230

PLUNGE ANGLE : 11

PLUNGE DIRECT: 312

DHD CALC: 1

SS CALC: 0

DETAIL RECORD COUNTS:

NOS ORE-SAMPLES: 59

NOS DOWN-H-SURVEYS: 3

NOS DOWN-H-LITHOLOGY: 52

NOS DOWN-H-STRUCTURE: 32

NOS DOWN-H-FAULTS: 6

NOS DOWN-H-SPLINES: 3

NOS COMPOSITES: 0

DDH: FAGU142 UTM-N: 905,180.9 UTM-E: 592,226.2 UTM-ELEV: 1,103.7 TOTAL DEPTH: 152.4 SECTION: W 80
RFE: S2 RFE DIR: 230 PLUNGE ANGLES: 11 312 DHD CALC: 1 SS CALC: 0

DEPTHS FROM	DEPTHS TO	SAMPLE NO.	INT.	REC.	ROCK UNIT	ASSAYS S.G. PULP	CU %	PB %	ZN %	AG(AA) G/MT	AG(FA) G/MT	AU(FA) G/MT	PO %	PY %	TOT FE	BAO %	HG %	MN %	AS %	BA %	S.G. W.R.
.0	2.1	07232	2.1	1.3	4E4	4.35	.24	9.10	15.90	183.00		4.46	1	18	19						
2.1	3.0	07233	.9	.8	5A9	3.29	.05	1.08	1.79	26.00		.89	1	10	12						
3.0	5.1	07234	2.1	1.8	4E4	4.14	.07	8.60	11.40	163.00		1.92	1	18	19						
5.1	5.5	07235	.4	.4	5A9	3.36	.01	.72	2.04	21.00		.89	1	15	16						
5.5	6.5	07236	1.0	1.0	4C0	3.58	.02	1.79	2.30	38.00		1.37	1	16	18						
6.5	7.2	07237	.7	.7	4A4	3.89	.13	6.20	13.00	142.00		1.92	1	16	17						
7.2	7.9	07238	.7	.7	4D0	3.05	.04	3.00	6.50	53.00	51.00	.69	1	6	8						
7.9	9.4	07239	1.5	1.5	4A41	3.31	.01	4.20	7.50	72.00		.82	1	9	11						
9.4	11.0	07240	1.6	1.6	4A41	3.64	.02	5.00	9.70	96.00		.96	1	14	15						
11.0	11.5	07241	.5	.5	5D4	3.28	.01	1.48	3.40	27.00		.55	2	10	12						
16.2	17.0	07242	.8	.8	4K1		.01	.21	.15	10.00											
21.3	23.4	07243	2.1	2.0	4K1	3.61	.01	.25	.19	13.00		.41	1	18	20						
23.4	24.6	07244	1.2	1.0	4A4	3.41	.02	3.70	8.50	60.00		.69	1	12	13						
24.6	25.1	07245	.5	.5	5D4	3.29	.01	1.94	6.00	33.00		.41	1	9	11						
25.1	25.4	07246	.3	.3	4K4	3.15	.10	7.60	18.00	167.00		2.33	1	14	16						
25.4	27.0	07247	1.6	1.6	4L0	3.30	.01	1.15	2.30	28.00		.34	1	6	8						
27.0	29.0	07248	2.0	2.0	4K7	3.34	.04	.68	1.10	20.00		.34	7	8	15						
29.0	30.6	07249	1.6	1.6	4K7		.03	.52	.58	17.00											
30.6	32.4	07250	1.8	1.8	4K7		.06	.88	1.27	28.00											
32.4	34.4	07251	2.0	1.8	4K7		.04	.37	.32	16.00											
34.4	36.2	07252	1.8	1.8	4K7		.03	.31	.16	14.00											
36.2	38.1	07253	1.9	1.9	4K0		.04	.21	.40	12.00											
38.1	39.6	07254	1.5	1.5	4K0	3.76	.02	.21	.69	12.00		.21	3	20	24						
39.6	39.9	07255	.3	.3	4E4	4.20	.06	9.60	18.80	190.00	184.00	1.17	1	16	17						
39.9	40.3	07256	.4	.4	4D0	3.38	.02	2.14	5.30	45.00		.75		15	16						
40.3	42.5	07257	2.2	2.1	4D4	3.38	.03	4.60	10.40	81.00		1.03	1	9	10						
42.5	44.2	07258	1.7	1.7	4A41	3.27	.03	3.70	9.10	62.00		.89	1	8	9						
44.2	45.9	07259	1.7	1.7	4A41	3.51	.02	5.50	12.40	95.00		.82	1	10	11						
45.9	46.6	07260	.7	.7	4E4	4.61	.09	10.30	24.20	208.00		1.37	1	18	19						
46.6	48.5	07261	1.9	1.8	4K0	3.98	.01	.68	2.05	20.00		.34	1	24	25						
48.5	50.1	07262	1.6	1.6	4K4	3.97	.01	1.37	4.30	31.00		.55	1	25	26						
50.1	50.9	07263	.8	.8	4E4	4.23	.09	4.90	15.90	120.00		1.30	1	21	22						
50.9	51.4	07264	.5	.5	4A4	3.42	.02	4.40	9.50	81.00		.75		12	13						
51.4	52.9	07265	1.5	1.5	4E4	4.14	.14	5.60	13.60	100.00	94.00	1.78	1	22	23						
52.9	55.1	07266	2.2	2.1	4E4	4.53	.21	7.60	18.30	160.00		1.78	1	21	22						
55.1	55.5	07267	.4	.4	4A4	3.64	.04	7.80	10.00	133.00		1.65	1	13	14						
55.5	55.9	07268	.4	.4	5D4*	3.00	.02	.35	.13	8.00		.34	5	2	7						
55.9	57.9	07269	2.0	2.0	4A0	3.38	.07	2.30	2.60	42.00		1.58	1	15	16						
57.9	59.7	07270	1.8	1.4	4A0	3.52	.03	1.30	3.10	30.00		1.17	2	13	15						
67.0	68.1	07271	1.1	1.1	4A4	3.31	.05	3.10	5.60	60.00		2.74	1	12	13						
68.1	70.2	07272	2.1	2.1	4A4	2.99	.02	1.75	3.70	31.00		.69	1	1	2						
96.3	97.6	07273	1.3	1.3	4C0	3.06	.08	.46	.68	10.00		.41	1	7	9						
97.6	99.5	07274	1.9	1.9	4A0	2.96	.15	1.28	2.10	24.00	23.00	.89	1	7	8						
99.5	101.5	07275	2.0	1.9	4A0	3.14	.12	.43	1.03	16.00		.89	1	12	13						
101.5	103.6	07276	2.1	2.1	4A0	3.16	.13	.67	1.61	20.00		1.10	1	12	13						
103.6	105.3	07277	1.7	1.7	4A0	3.18	.06	2.96	1.72	40.00		1.51		11	12						
105.3	107.5	07278	2.2	2.2	4A0	3.20	.07	1.73	1.21	32.00		1.03		11	12						

DDH: FAGU142 UTM-N: 905,180.9 UTM-E: 592,226.2 UTM-ELEV: 1,103.7 TOTAL DEPTH: 152.4 SECTION: W 80
RFE: S2 RFE DIR: 230 PLUNGE ANGLES: 11 312 DHD CALC: 1 SS CALC: 0

DEPTHS FROM	DEPTHS TO	SAMPLE NO.	INT.	REC.	ROCK UNIT	ASSAYS S.G. PULP	CU %	PB %	ZN %	AG(AA) G/MT	AG(FA) G/MT	AU(FA) G/MT	PO %	PY %	TOT FE	BAO %	HG %	MN %	AS %	BA %	S.G. W.R.
107.5	109.4	07279	1.9	1.9	4A0	3.63	.20	.05	.20	26.00		.82	1	24	25						
109.4	111.1	07280	1.7	1.7	4A0		.26	.06	.30	30.00											
111.1	113.1	07281	2.0	2.0	4A0	3.33	.11	.48	.93	21.00		1.03	1	17	18						
113.1	114.7	07282	1.6	1.5	4A4	3.16	.03	2.33	3.19	34.00		1.03	1	10	11						
114.7	116.8	07283	1.1	1.1	4A0	3.38	.10	.06	.20	13.00		.82	1	18	19						
116.8	117.0	07284	1.2	1.2	4A0	3.57	.16	.10	.23	15.00		.69	1	23	24						
117.0	119.1	07285	2.1	2.1	4G4	4.69	.14	4.70	8.10	91.00		2.19	1	29	30						
119.1	121.0	07286	1.9	1.9	4G0	4.40	.03	1.35	4.00	23.00	21.00	.62		17	17						
121.0	123.0	07287	2.0	2.0	4G0	4.67	.17	3.00	5.40	64.00		1.30		28	28						
123.0	125.0	07288	2.0	1.9	4E4	4.58	.18	5.70	11.00	100.00		1.44	1	26	28						
125.0	127.5	07289	2.5	2.2	4E46	4.12	.14	3.80	7.80	70.00		1.51	1	23	24						
127.5	128.9	07290	1.4	1.2	4E4	3.66	.04	3.30	8.10	65.00		1.03	5	9	14						
WEIGHTED AVERAGE																					
.0	11.5		11.5	10.3		3.73	.07	5.36	9.05	105.04	3.10	1.80	1	14	16						
16.2	17.0		.8	.8			.01	.21	.15	10.00											
21.3	59.7		38.4	37.2		2.80	.04	2.53	5.69	52.40	5.10	.69	1	11	13						
67.0	70.2		3.2	3.2		3.10	.03	2.21	4.35	40.96		1.39	1	5	6						
96.3	128.9		32.6	31.8		3.48	.12	1.93	3.45	40.76	2.56	1.06	1	16	17						

DDH: FAGU142 UTM-N: 905,180.9 UTM-E: 592,226.2 UTM-ELEV: 1,103.7 TOTAL DEPTH: 152.4 SECTION: W 80
PFE: S2 RFE DIR: 230 PLUNGE ANGLES: 11 312 DHD CALC: 1 SS CALC: 0

DEPTH	ZENITH	AZIMUTH
0.000	119.600	223.000
50.400	122.000	226.000
140.200	136.000	221.000

DDH: FAGU142 UTM-N: 905,180.9 UTM-E: 592,226.2 UTM-ELEV: 1,103.7 TOTAL DEPTH: 152.4 SECTION: W 80
RFE: S2 RFE DIR: 230 PLUNGE ANGLES: 11 312 DHD CALC: 1 SS CALC: 0

DEPTH	UNIT	CODE	DESC	RECOVERY	IND
2.1	0001	4E4	(4A) MINOR	0.0	1
3.0	0002	5A9		0.0	1
5.1	0003	4E4		0.0	1
5.5	0004	5A9		0.0	1
6.5	0005	4C0	(5A0) MINOR	0.0	1
7.2	0006	4A4	(4E4) BXA	0.0	1
7.9	0007	4D0	(5D4*) 50:50	0.0	1
11.0	0008	4A41	PHYLLITIC (3G2)->(4D45)	0.0	1
11.5	0009	5D4*	(4D0) 60:40	0.0	1
16.2	0010	5A1		0.0	1
17.0	0011	4K1		0.0	1
19.6	0012	5D4@		0.0	1
21.3	0013	5A6		0.0	1
23.4	0014	4K1		0.0	1
24.6	0015	4A4	->4D45	0.0	1
25.1	0016	5D4*	(4D4) 90:10	0.0	1
25.4	0017	4K4		0.0	1
27.0	0018	4L0	(4K0)(4K4)(10Q0)	0.0	1
36.2	0019	4K7		0.0	1
39.6	0020	4K0	->4K27	0.0	1
39.9	0021	4E4		0.0	1
42.5	0022	4D0	&4	0.0	1
45.9	0023	4A41	PHYLLITIC	0.0	1
46.6	0024	4E4		0.0	1
50.1	0025	4K0	&4	0.0	1
50.9	0026	4E4	&*	0.0	1
51.4	0027	4A4	(3G2)	0.0	1
55.1	0028	4E4	&*	0.0	1
55.5	0029	4A4	(3G2)	0.0	1
55.9	0030	5D4*		0.0	1
59.7	0031	4A0	&4 PHYLLITIC? (4L0)	0.0	1
60.6	0032	4L0		0.0	1
61.8	0033	5B6	[3G0]?	0.0	1
62.5	0034	4L0		0.0	1
67.0	0035	5B6	[3G0]?	0.0	1
68.1	0036	4A0	&4	0.0	1
70.2	0037	4A0	&4	0.0	1
71.6	0038	5B1	->5B16	0.0	1
91.4	0039	5B6	->3G0 (5D3)	0.0	1
92.4	0040	4L0	(4L1) [5D4*]	0.0	1
93.0	0041	5B2	[3G9]?	0.0	1
95.3	0042	5D4*	->5C4* [4L0]	0.0	1
96.3	0043	5C3@		0.0	1
97.6	0044	4C0	SERICITIC [4L12]	0.0	1
117.0	0045	4A0	&4 PHYLLITIC (4E0) MINOR	0.0	1
119.1	0046	4G4	->4E46	0.0	1
123.0	0047	4G0		0.0	1
125.0	0048	4E4	&# POROUS	0.0	1
127.5	0049	4E46	BXA	0.0	1
128.9	0050	4E4	&6 &@ BXA	0.0	1
134.1	0051	5B6@	&2 "MARKER"	0.0	1

DDH: FAGU142 UTM-N: 905,180.9 UTM-E: 592,226.2 UTM-ELEV: 1,103.7 TOTAL DEPTH: 152.4 SECTION: W 80
RFE: S2 RFE DIR: 230 PLUNGE ANGLES: 11 312 DHD CALC: 1 SS CALC: 0

DEPTH	UNIT	CODE	DESC	RECOVERY	IND
152.4	0052	580	&2 &3 MINOR	0.0	1

DDH: FAGU142 UTM-N: 905,180.9 UTM-E: 592,226.2 UTM-ELEV: 1,103.7 TOTAL DEPTH: 152.4 SECTION: W 80
RFE: S2 RFE DIR: 230 PLUNGE ANGLES: 11 312 DHD CALC: 1 SS CALC: 0

DDH	F DEPTH	T DEPTH	FEAT	SYMTRY	S0 ANGLE	S0 DIRECT	S1 ANGLE	S1 DIRECT	S2 ANGLE	S2 DIRECT	RFE CDE	DHDC	SDC	PROCESS
FAGU142	0.0	2.8	PS2		0	0	0	0	53	230	C	1	0	0
FAGU142	0.0	7.8	PS2		0	0	0	0	50	230	C	1	0	0
FAGU142	0.1	11.5	PS2	P	0	0	0	0	34	230	C	1	0	0
FAGU142	0.0	15.1	CS2		0	0	0	0	52	230	C	1	0	0
FAGU142	0.0	20.0	CS2		0	0	0	0	32	230	C	1	0	0
FAGU142	11.5	21.3	CS2	Z	0	0	0	0	0	0	C	1	0	0
FAGU142	0.0	39.9	PS2		0	0	0	0	52	230	C	1	0	0
FAGU142	0.0	55.8	PS2		0	0	0	0	38	230	C	1	0	0
FAGU142	0.0	61.0	PS2		0	0	0	0	50	230	C	1	0	0
FAGU142	0.0	65.5	PS2		0	0	0	0	22	230	C	1	0	0
FAGU142	0.0	70.1	PS2		0	0	0	0	42	230	C	1	0	0
FAGU142	0.0	74.7	PS2		0	0	0	0	37	230	C	1	0	0
FAGU142	21.3	80.0	PS2	P	0	0	0	0	40	230	C	1	0	0
FAGU142	0.0	85.6	CS2		0	0	0	0	36	230	C	1	0	0
FAGU142	80.0	89.0	CS2	Z	0	0	0	0	35	230	C	1	0	0
FAGU142	0.0	94.5	S2		0	0	0	0	47	230	C	1	0	0
FAGU142	89.0	97.6	PS2	P	0	0	0	0	0	0	C	1	0	0
FAGU142	0.0	100.4	CS2		0	0	0	0	49	230	C	1	0	0
FAGU142	0.0	105.1	CS2		0	0	0	0	32	230	C	1	0	0
FAGU142	0.0	109.7	CS2		0	0	0	0	45	230	C	1	0	0
FAGU142	0.0	114.3	CS2		0	0	0	0	50	230	C	1	0	0
FAGU142	97.6	117.0	CS2	Z	0	0	0	0	0	0	C	1	0	0
FAGU142	0.0	120.3	S2		0	0	0	0	60	230	C	1	0	0
FAGU142	0.0	122.5	S2		0	0	0	0	62	230	C	1	0	0
FAGU142	117.0	128.9	PS2	P	0	0	0	0	0	0	C	1	0	0
FAGU142	0.0	131.1	CS2		0	0	0	0	50	230	C	1	0	0
FAGU142	0.0	135.6	CS2		0	0	0	0	50	230	C	1	0	0
FAGU142	0.0	140.2	CS2		0	0	0	0	73	230	C	1	0	0
FAGU142	0.0	144.8	CS2		0	0	0	0	70	230	C	1	0	0
FAGU142	128.9	147.6	CS2	Z	0	0	0	0	0	0	C	1	0	0
FAGU142	0.0	149.4	CS2		0	0	0	0	61	230	C	1	0	0
FAGU142	147.6	152.4	CS2	M	0	0	0	0	0	0	C	1	0	0

DDH: FAGU142 UTM-N: 905,180.9 UTM-E: 592,226.2 UTM-ELEV: 1,103.7 TOTAL DEPTH: 152.4 SECTION: W 80
RFE: S2 RFE DIR: 230 PLUNGE ANGLES: 11 312 DHD CALC: 1 SS CALC: 0

DDH	F DEPTH	T DEPTH	FEAT REC CD	PARLL	UPPER PLANE		INTERNAL PLANE		LOWER PLANE		DHD
FAGU142	6.5	7.2	D?		0	0	0	0	0	3	1
FAGU142	0.0	14.0	GF		0	0	0	0	0	3	1
FAGU142	21.3	39.6	D??		0	0	0	0	0	3	1
FAGU142	39.6	59.7	D??		0	0	0	0	0	3	1
FAGU142	125.0	126.5	D?		0	0	0	0	0	3	1
FAGU142	126.5	128.9	X?		0	0	0	0	0	3	1

CYPRUS ANVIL MINING CORPORATION

DIAMOND DRILL CORE LOG

Hole Number: 76-U142

Project: GRUM RE-LOG

Location: VANGORDA PLAT

Claim: _____

UTM ~~Terr. Plane~~ Co-ords.: 6,905,180.9 N

592,226.2 E

Grid Co-ords.: _____

_____

Elevation: 1103.7

Total Depth: 152.4

Fabric Orientation Diagram:

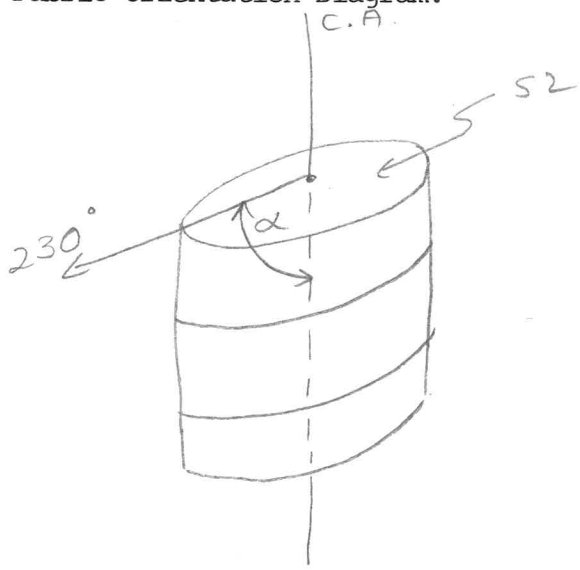

All symmetry determinations looking

NW with S2 dipping

SW with dip azimuth 230.

Purpose: _____

Rc Logged by: DJH Date(s) Logged: _____

Drilling Contractor: _____ Core: Size From To Collar Cased and Capped: ____

Size	From	To
BQ	0	152.4

Started: 9/8/76 Completed: 11/8/76

Cyprus Anvil Mining Corp.

Diamond Drill Core Log

DDH 76-U142

Code	Drillhole	Elevation	Northing	Easting	Comments
1	2 8	10 16	17 24	25 32	34 48
T	76-U142	1103.7	9051809.9	592222612	METRES

Code	Drillhole	Depth	Zenith Angle	True Azimuth	Comments
1	2 8	10 14	22 26	28 32	34 56
R	76-U142	0 0	119.6	223.0	AT COLLAR
R	76-U142	56.4	122.0	226.0	SPERRY SUN
R	76-U142	140.2	136.0	221.0	
R		.	.	.	
R		.	.	.	
R		.	.	.	
R		.	.	.	
R		.	.	.	
R		.	.	.	
R		.	.	.	
R		.	.	.	
R		.	.	.	
R		.	.	.	
R		.	.	.	
R		.	.	.	
R		.	.	.	

Code	Drillhole	Comments, Errant Remarks, Snivellings and/or Lewd Suggestions
1	2 8	10 47

DDH 76-U142 (2 … 8)

Cyprus Anvil Mining Corp.
Lithologic Log

Logged By: DJH

Code	From m (10–14)	To m (16–20)	Unit (22–23)	Code (25–27)	Description
L	00	21	1	4E4	w/ minor 4A
L	21	30	2	5A0 → 5A9 on assays	
L	30	51	3	4E4	as unit 1
L	51	55	4	5A0 → 5A9 on assays	
L	55	65	5	4D0 → 4C0	w/ minor 5A0
L	65	72	6	4A0	bxia → micro bxia ; ~70% mass. sde matrix — 4A4 —
L	72	79	7	4DL	50:50 4D0:4L0 (w/ mariposite) → 5D4 interbedded w/ ctcs @ 55° to C.A.
2 L	79	110	8	4A4	4A41 +3G2 finely inthanded → phyllitic Grades to 4D45
L	110	115	9	4LD	60:40 4L0 (w/ mariposite) : 4D0 5D4 interbedded, ctcs @ 35° to C.A.
L	115	162	10	5A1	no sdes ; fault observed @ 14.0 m gouge
L	162	170	11	4K0	Fe, Mg $CO_3^=$; 60% sdes (py) 4K1
L	170	196	12	4L0	→ 4L3? ; minor mariposite ; altered 5D? ; minor py 5D4* ank + marip
L	196	213	13	5A6	
L	213	234	14	4K1	as unit 11
L	234	246	15	4A4	graphite minimal & mostly phyllite ; grading toward 4D45 ; as unit 8
L	246	251	16	4L0	minor mariposite ; ~10% 4D0 5D4 → 4 on assays
L	251	254	17	4K4	~80% sdes some SiO_2
L	254	270	18	4L0	w/ 10% 4K0 & 4K4 (super grade) +10Q0
5 L	270	362	19	4K7	distinctive variant of 4K ; 60% white carbonate (+ qtz?), 40% po. w/ bxia text
2 L	362	396	20	4K0	→ 4K27 locally
L	396	399	21	4E4	
2 L	399	425	22	4D0	±4 (assays) minor sericite (not w. M) This is like 4A41 phyllitic of units 8+15+23 but more qtz rich + less phyllite
2 L	425	459	23	4A4	4A41 +3G2 → 4A41 phyllitic
L	459	466	24	4E4	
2 L	466	501	25	4K0	±4 70% py 30% pinkish carbonate
L	501	509	26	4E4	minor $CO_3^=$ "clasts" esp @ HW
L	509	514	27	4A4	again +3G2
2 L	514	551	28	4E4	as unit 26
L	551	555	29	4A4	+3G2
L	555	559	30	4L0	w/ minor mariposite → 5D(C?)4*
2 L	559	597	31	4A0	→ 4A4 locally ; minor 4L0 4A0 overall on assays +3G2
L	597	606	32	4L0	

DDH 76-U142 (2–8)

Cyprus Anvil Mining Corp.
Lithologic Log

Logged By: DJH

Code (1)	From (10–14)	To (16–20)	Unit (22–23)	Code (25–27)	Description
L	1606	1618	33	5B6	3G0?
L	1618	1625	34	4L0	greenish buff colour
L	1625	1670	35	5B6	3G0?
L	1670	1681	36	4A0	15-20% tot sdes (py > sph > gal) ±4
L	1681	1702	37	4A0	5% tot. sdes (sph > gal > py) ±4
L	1702	1716	38	5B1	→ 5B16 ; only v. minor sdes.
L	1716	1914	39	5B6	→ 3G0? ; minor 5D3 bands
L	1914	1924	40	4L0	variable int. w/ 4L1, 4L0 (+ mariposite)
L	1924	1930	41	5B2	3G9?
L	1930	1953	42	4L0	w/ minor 5D0 (mottled) → 5C* mott (dolomitized) 93.2-93.9
L	1953	1963	43	~~5D3~~	Fe Mg $CO_3^=$; 5C* mott dolo + ank
✓ L	1963	1976	44	4C0	or equally 4L12 ; "cherty" appearance "4C0 sericitic"
11 L	1976	1170	45	4A0	~10-15% sdes overall (py) ; minor 4E0 bands to 0.2 m. "4A0 ±4 + 3G2"
L	1170	1191	46	~~4G0~~	4 or assays 4E46? ; $BaSO_4$ ≈ 10% (High grade 4E4 117-117.3) → only very locally → becomes 4A1 below 106.7
2 L	1191	1230	47	4G0	≈ 25% $BaSO_4$ or more
L	1230	1250	48	4E4	v. porous (dissolved ~~$BaSO_4$~~ $CO_3^=$?) locally calcareous
L	1250	1265	49	4E4	bxia w/ sde matrix. + barite 4E46 bxia
L	1265	1289	50	4E4	? bxia zone ; possibly 4G or 4D ; w/ cementing matrix of Fe, Mg $CO_3^=$
L	1289	1524	51	5B2	→ 5B23 ; one small 5D3 band 149.2-149.4
					minor corrections by JSM 1981
					Correction: Note #49-50 break is at 127.5 not 126.5
L	1289	1341		5B6	*±2 ; dol ; well devel^d. dol. sst bands ; S_2 ∥ carb folia
L	1341	1524		5B0	±2 ±* ; minor *dol in last 2.0 m.

DSJ 30 Aug 1982

DDH 76-A142 (2 8)

Cyprus Anvil Mining Corp.
Structural Log

Logged By: DJH.

Code	From m	To m	Feature	Sym	S_1 Dip Direct.	S_2 Dip Direct.	Description
1	10 14	16 20	22 24	26	28 32	34 38	
							R region 0.0 – 11.5 m.
							+ some bxia.
S		28	PS2			53 230	
S		78	PS2			50 230	
S		115	F2	R		34 230	Z region 11.5 – 21.3 m.
S		151	CS2			52 230	
S		200	CS2			32 230	
S		213	F2	Z			Breccia zone 21.3 – 39.6
							– no sym. or S2
S		399	PS2			52 230	Breccia zone w/ minor PS2
S		558	PS2			38 230	39.6 – 59.7 m.
S		597	F2	P			PS2 w/ minor Z 59.7 – 80.0 m
S		610	PS2			50 230	
S		655	PS2			22 230	
S		701	PS2			42 230	
S		747	PS2			37 230	
S		800	F2	P		40 230	Z region 80.0 – 89.0 m.
S		856	CS2			36 230	w/ minor PS2 zones.
S		890	F2	Z		35 230	R region 89.0 – 97.6
S		945	S2			47 230	
S		976	F2	R			Z region 97.6 – 117.0
S		1004	CS2			49 230	
S		1051	CS2			32 230	
S		1097	CS2			45 230	
S		1143	CS2			50 230	
S		1170	F2	Z			R region 117.0 – 128.9
S		1203	S2			60 230	comp. layering in mass. sdes.
S		1225	S2			62 230	= S2?
S		1289	F2	R			Z region 128.9 – 147.6
S		1311	CS2		✓	50 230	
S		1356	CS2		✓	50 230	
S		1402	CS2		✓	73 230	
S		1448	CS2		✓	70 230	
S		1476	F2	Z			M region? 147.6 – 152.4
S		1494	CS2		✓	61 230	
S		1524	F2	M			

E OH

DDH 76-U-142 (2 / 8)

Cyprus Anvil Mining Corp.
Geochemical Log (Sampler's Copy)

RE Logged By: DJTH.

Sampled By: K.A.

Code	From	To	Sample No.	Description	LENGTH	REC
1	10 14	16 20	22 27			
D	100	121	142102	K.A	2.1	0.9
P	121	145	142103	"	2.4	1.5
P	145	161	142104	"	1.6	1.3
P	161	176	142105	"	1.5	1.4
P	176	191	142106	"	1.5	1.5
P	191	211	142107	"	2.6	2.0
P	213	229	142108	"	1.6	1.5
P	229	244	142109	"	1.5	1.2
P	244	259	142110	"	1.5	1.5
P	259	274	142111	"	1.5	1.4
P	274	290	142112	"	1.6	1.5
P	290	305	142113	"	1.5	1.5
P	305	335	142114	"	3.0	3.0
P	335	366	142115	"	3.1	3.0
P	366	396	142116	"	3.0	3.0
P	396	411	142117	"	1.5	1.5
P	411	427	142118	"	1.6	1.5
P	427	442	142119	"	1.5	1.5
P	442	457	142120	"	1.5	1.5
P	457	472	142121	"	1.5	1.5
P	472	488	142122	"	1.6	1.5
P	488	503	142123	"	1.5	1.5
P	503	518	142124	"	1.5	1.5
P	518	533	142125	"	1.5	1.5
P	533	549	142126	"	1.6	1.5
P	549	564	A12127	"	1.5	1.4
P	564	579	A12128	"	1.5	1.5
P	579	596	A12129	"	1.7	1.6
P	670	702	A12130	"	3.2	3.0
P	970	991	A12131	"	2.1	2.1
P	991	1006	A12132	"	1.5	1.5
P	1006	1021	A12133	"	1.5	1.5
P	1021	1036	A12134	"	1.5	1.5

DDH 86-U14

Cyprus Anvil Mining Corp.
Geochemical Log (Sampler's Copy)

Logged By: RJH
Sampled By: KA.

Code	From	To	Sample No.	Description		
1	10 14	16 20	22 27		LENGTH	REC.
P	1036	1052	142335	KA	1.6	1.6
P	1052	1067	142336	KA	1.5	1.5
P	1067	1082	142337	"	1.5	1.5
P	1082	1097	142338	"	1.5	1.5
P	1097	1113	142339	"	1.6	1.6
P	1113	1128	142340	"	1.5	1.5
P	1128	1143	142341	"	1.5	1.5
P	1143	1158	142342	"	1.5	1.5
P	1158	1173	142343	"	1.5	1.5
P	1173	1189	142344	"	1.6	1.6
P	1189	1204	142345	"	1.5	1.5
P	1204	1219	142346	"	1.5	1.5
P	1219	1234	142347	"	1.5	1.5
P	1234	1250	142348	"	1.6	1.4
P	1250	1265	142349	"	1.5	1.5
P	1265	1287	142350	"	2.2	1.9

Section 80 W logged in 1980, Checked for sampling 1981

DDH 76-41-42 Cyprus Anvil Mining Corp Page ____ of ____

Logged by DJH, checked JSM

ASSAY LOG (SAMPLER'S COPY) Date ____ Sampled by ____

CODE	FROM	TO	SAMPLE	INTR.	REC (m)	UNIT	DESCRIPTION	
	10 14	16 20	22 26	28 30	32 34	36 40	42	
A	100	121	721312	121	113	1E41	(4A) #1	
A	121	130	721313	109	108	5TA01	#2	
A	130	151	721314	121	118	1E41	#3	
A	151	155	721315	104	104	5TA01	#4	#1
A	155	165	721316	110	110	4D101	(5A0) #5	
A	165	172	721317	107	107	4A101	(4A4) #6	
A	172	179	721318	107	107	4D101	(5D4)	
A	179	194	721319	115	115	4A141	+3G2 → 4A41 phyll, grades to 4D45	#8
A	194	1110	721401	116	116	4A141	....	#8
A	1110	1115	721411	105	105	5D141	(4D0)	#9
A	1162	1170	721412	108	108	4K111		#11 #2
A	1213	1234	721413	121	120	4K111		#14
A	1234	1246	721414	112	110	4A141		#15
A	1246	1251	721415	105	105	5D141	(4D0)	#16
A	1251	1254	721416	103	103	4K141	±1	#17
A	1254	1270	721417	116	116	41L101	(4K0, 4K4, 10Q0)	#18
A	1270	1290	721418	120	120	41K171		
A	1290	1306	721419	116	116	4K171	#19	
A	1306	1324	721510	118	118	4K171		#3
A	1324	1344	721511	120	118	4K171		
A	1344	1362	721512	118	118	4K171		
A	1362	1381	721513	119	119	41K10	(4K27) #20	
A	1381	1396	721514	115	115	4K10	(4K27)	
A	1396	1399	721515	103	103	41E41	#21	
A	1399	1403	721516	104	104	41D0	[4A41 phyll] #22	
A	1403	1425	721517	122	121	41D101	"	
A	1425	1442	721518	117	117	41A141	+3G2 → 4A41 phyll #23	
A	1442	1459	721519	117	117	41A141	+3G2 → 4A41 phyll	
A	1459	1466	721610	107	107	41E41		#24
A	1466	1485	721611	119	118	41K101		#25
A	1485	1501	721612	116	116	41K101		#25
A	1501	1509	721613	108	108	41E41	±*	#26
A	1509	1514	721614	105	105	4A141		#27
A	1514	1529	721615	115	115	41E41		#28

C.A.M.C. 1981 - E - 5

DDH 76-414-7 (2 / 8) Cyprus Anvil Mining Corp

Page _____ of _____

Logged by DJH, checked by JSM

ASSAY LOG (SAMPLER'S COPY) Date _____ Sampled by _____

CODE	FROM	TO	SAMPLE	INTR.	REC (m)	UNIT	DESCRIPTION	
1	10 14	16 20	22 26	28 30	32 34	36 40	42	
A	1512.9	1551	172616	22	21	41E41		#28
A	1551	1555	172617	04	04	41A41	+3G2	#29
A	1555	1559	172618	04	04	5D14*	(C?)	#30
A	1559	1579	172619	20	26	41A01	±4 +3G2 (4LO)	#31
A	1579	1597	172710	18	14	41A0	±4 +3G2 (4LO)	#31
A	1670	1681	172711	11	11	4A10	±4	#36
A	1681	1702	172712	21	21	4A10	±4	#37
A	1963	1976	172713	13	13	4C01	[4L12] some not split by KA so not true sample	#44
A	1976	1995	172714	19	19	4A01	±4 ±1 +3G2	#45
A	1995	1015	172715	20	19			
A	1015	1036	172716	21	21			
A	1036	1053	172717	17	17			
A	1053	1075	172718	22	22			
A	1075	1094	172719	19	19			
A	1094	1111	172810	17	17			
A	1111	1131	172811	20	20			
A	1131	1147	172812	16	15			
A	1147	1158	172813	11	11			
A	1158	1170	172814	12	12			#45
A	1170	1191	172815	21	21	4G10	[4E46?] 4E4@H.W.	#46
A	1191	1210	172816	19	19	4G10		#47
A	1210	1230	172817	20	20	4G0		#47
A	1230	1250	172818	20	19	41E41	porous ± * cc.	#48
A	1250	1275	172819	25	22	41E446	bxia	#49
A	1275	1289	172910	14	12	41E41	bxia 4G w/ FeMgCO3 matrix	#50

#4

#5

C.A.M.C. 1981 - E - 5

DDH U142 (2–8)

Cyprus Anvil Mining Corp.

Lithologic Log

Page 1 of _____

Date: _____ Logged By: _____

Code	From	To	Recov.	No.	Unit	Description
1	10–14	16–20	22–24	26–28	30–34	35
				1	4E4	ok
				3	4E4	ok
				5	4E1	OQ* bad specimen 60% s=
				7	4P0	(4D4) SD4* ok
				6	4AP	(4A4) ok good grey silica tr graph bands
				8	4AH1	=good 4A4 "
				9	4D0	(SD4*) good.
				14	4K1	good
				16	SDH	4D - ok
				17	4K4	ok
				18	4LP	4K0 4K4 1000 bad specimen - many include some SD4* but some ok 4L0
				15	4A4	light on graphite but has fine grey silica
				19	4K7	OK
				20	4K0	OK - lots of bx + texture.
				21	4E0	ok
				22	4D0	4A4 ph- = sample is 4D5
				23	4AH1	(362) → 4A1ph decent 4A4 - a bit light on graph but good grey silica lapis
				25	4K4	good.
				24	4E4	good high grade + well banded
				26	4EH	±*= 4E41±* perhaps.
				27	4AH	too light for good 4A4 but has good grey silica bearing lapis.
				28	4E4	= 4E41
				29	4A4	a little light might be better called 4D5 but has good grey silica. - some qtz + CO3
				45	SD4*	good
					4A4	good grey silica excellent 4A
				46	4GD	(4E46) fine

DDH EAGU-142 Cyprus Anvil Mining Corp. Page _____ of _____

2 Meters 8

Structural Log Date: _____ Logged By: _____

Code	From	To	Feature	Sym	S_0 Dip Direct.	S_1 Dip Direct.	S_2 Dip Direct	Description
1	10 14	16 20	22 24	26	28 32	34 38	40 44	
F	165	172	D?					brcia → micro brcia
F		1140	GF					gouge
F	1250	1265	D?					brcia w/ sulf. matrix
F	1265	1289	X?					" " $CO_3^=$ " (dol.)
F	213	396	D??					
F	396	597	D??					

C.A.M.C. 1981 - E - 4

DIAMOND DRILL RECORD

LOGGED BY ALEXANDER YOUNG-PO

D.D.H. Nº 76-U-142 PAGE 1

PROPERTY GRUM JOINT VENTURE

LATITUDE 10,976.417 ? 80W STARTED AUGUST 9, 1976

DEPARTURE 7,538.102 ? 7N COMPLETED AUGUST 11, 1976

ELEVATION 1,111.220 ? PROPOSED DEPTH

ULTIMATE DEPTH 152.4m

HOLE SURVEY:		
DEPTH	BEARING	DIP
COLLAR	223° 02'	-29° 33'
56.4	225°	-33°
140.2	220°	-46°

CLAIM Nº

N

DIRECTION AND DISTANCE FROM N.E. CLAIM POST

TOTAL CORE RECOVERY: 94%

Interval From	Interval To	DESCRIPTION	Recovery	Sample Nº	Interval From	Interval To	Sample Length	Assay Pb	Assay Zn	Assay Ag	Assay Au	Assay Cu	Assay x Pb	Assay x Zn	Assay x Ag
0	11.5	MASSIVE SULFIDES INTERCALATED WITH INTERVALS OF GRA- 60 8	0.9	4202	0	2.1	2.1	10.76	14.99	190.6			22.60	31.48	400.32
		PHITIC PHYLLITE (~~M~~G). Broken, blocky core from 60 12	1.5	4203	2.1	4.5	2.4	8.44	10.61	141.3			20.26	25.46	339.02
		pebbles to 4cm long core. Compositional bands Sph/py 40 8	1.3	4204	4.5	6.1	1.6	1.98	3.05	33.26			3.17	4.88	53.22
		= 25-30°. Foliation in graphitic intervals = 35-40°. 40 15	1.4	4205	6.1	7.6	1.5	6.06	10.56	100.8			9.99	15.84	151.2
		Contacts between graphitic/sulfide units = 45-60°. 35 15	1.5	4206	7.6	9.1	1.5	3.93	7.14	58.29			5.90	10.71	87.44
		7.6-8: Bleached phyllite interval. Light gray with 35 12	2.0	4207	9.1	11.7	2.6	4.60	7.46	73.31			11.96	19.40	191.65
		greenish hue-spots fuchsite. Contacts clean and sharp = 50°.													
		11.5: Change to Graphitic Phyllite. Contact marked by		W.Av.	0	11.7	11.7	6.31	9.21	104.5			73.88	107.77	1222.9
		short interval of bleached Phyllite (=20cm).		W.Av.	0	4.5	4.5	9.52	12.65	164.3			42.68	56.94	739.34
		Broken ground.		W.Av.	6.1	11.7	5.6	4.97	8.21	76.84			27.85	45.95	438.29
11.5	16.2	GRAPHITIC PHYLLITE (G). Easily breaks into poker chips.	4.3		11.5	16.2	4.7	Trace PZ est.							
		Foliation F_2 = 50-60°; F_1 = 5-10°. Blebs of sulfides with													
		F_1 structure. Py: 2%, PbZn: Trace.													
		16.2: Abrupt change to Bleached Phyllite (Sb). Contact													
		broken ground marked by bull quartz.													

LOGGED BY _____ D.D.H. NO 76-U-142 PAGE 2

Interval From	Interval To	DESCRIPTION	Recovery	Sample NO	Interval From	Interval To	Sample Length	Assay Pb	Assay Zn	Assay Ag	Assay Au	Assay Cu	Assay x Pb	Assay x Zn	Assay x Ag
16.2	19.6	BLEACHED PHYLLITE (Sb). Competent. Foliation F = 30°;	3.3		16.2	19.6	3.4	1 PZ,	est.						
		F = 45-60°. Buff with white stripes and spots of fuchsites													
		Sporadic clots/laminae of sulfides. Py: 3%, PbZn: 1%.													
		19.8: Sharp and clean change to Graphitic Phyllite. Con-													
		tact = 45° marked by 2cm. bull quartz.													
19.6	21.3	GRAPHITIC PHYLLITE (G). Easily breaks into poker chips.			19.6	21.3	1.7								
		Foliation = fissility = 30-35°. Blebs of Py.													
		21.2: Shear.													
		21.3: Change to Quartz-sulfide (P). Contact sharp and													
		clean = 50°.													
21.3	45.8	QUARTZ-SULFIDE (P) with intervals of mineralized 45 3	1.5	4208	21.3	22.9	1.6	0.25	0.15	7.20					
		graphitic phyllite (PG) and bleached Phyllite (Sb). 35 8	1.2	4209	22.9	24.4	1.5	2.48	6.25	44.23			3.72	9.38	66.35
		Foliation = 40-45°. Compositional banding in wider 35 8	1.5	4210	24.4	25.9	1.5	4.58	10.66	107.0			6.87	15.99	160.46
		sulfide runs = 40°. 30 6	1.4	4211	25.9	27.4	1.5	1.68	3.55	28.11					
		25.6-25.9: Bleached phyllite interval. Silvery white 30 4	1.5	4212	27.4	29.0	1.6	0.65	0.83	14.06			1.48	PbZn	
		with greenish laminae. Contact angle- 25 3	1.5	4213	29.0	30.5	1.5	0.53	0.60	9.94			1.13	PbZn	
		first = 45°; second contact = 25 2	3.0	4214	30.5	33.5	3.0	0.73	0.73	15.09			1.43	PbZn	
		27.4-36.6: Quartz-sulfide. Appear like bull quartz 25 2	3.0	4215	33.5	36.6	3.1	0.33	0.15	7.89			0.48	PbZn	
		originally fracture filled with sulfides 35 4	3.0	4216	36.6	39.6	3.0	0.33	0.70	8.91			1.03	PbZn	
		particularly Py and Po. 40 8	1.5	4217	39.6	41.1	1.5	3.80	8.23	72.69			5.70	12.35	109.04

LOGGED BY _____ D.D.H. Nº 76-U-142 PAGE 3

Interval From	Interval To	DESCRIPTION	Recovery	Sample Nº	Interval From	Interval To	Sample Length	Assay Pb	Assay Zn	Assay Ag	Assay Au	Assay Cu	Assay x Pb	Assay x Zn	Assay x Ag
		42.5: F_2 = 50°; F_1 = 0-5°. Mineralized graphitic 40 10	1.5	4218	41.1	42.7	1.6	4.18	9.60	76.80			6.69	15.36	122.88
		phyllite. 35 10	1.5	4219	42.7	44.2	1.5	4.05	8.40	68.56			6.08	12.6	102.84
		42.7; 44; 44.3: Small fold noses. 40 12	1.5	4220	44.2	45.7	1.5	5.25	10.66	93.94			7.88	15.99	140.91
		45.8: Sharp change to massive sulfide (M). Contact 25 8	1.5	4221	45.7	47.2	1.5	5.92	14.33	114.9			8.88	21.50	172.29
		= 25°. 60 5	1.5	4222	47.2	48.8	1.6	0.75	2.55	16.11			1.20	4.08	25.78
		70 5	1.5	4223	48.8	50.3	1.5	1.90	5.65	36.34			2.85	8.48	54.51
45.8	55.0	MASSIVE SULFIDE (M). Mixed, structureless variety (M) with													
		quartz inclusion (MIq) with trace of calcite. 70 8	1.5	4224	50.3	51.8	1.5	5.67	12.95	109.0			8.51	19.43	163.55
		Compositional banding = 10° @ 46-46.5 and change 75 9	1.5	4225	51.8	53.3	1.5	6.56	14.47	103.9			9.84	21.71	155.84
		to 30-35° @ 48.5. 75 9	1.5	4226	53.3	54.9	1.6	8.76	20.63	164.6			14.02	33.01	263.31
		55.0: Gradual change to mineralized graphitic 50 7	1.4	4227	54.9	56.4	1.5	5.81	7.29	81.60			8.72	10.94	122.4
		phyllite (PG). 30 5	1.5	4228	56.4	57.9	1.5	2.28	2.55	34.29			3.42	3.83	51.44
		35 6	1.6	4229	57.9	59.6	1.7	1.50	4.60	30.17			2.55	7.82	51.29
55.0	59.6	MINERALIZED GRAPHITIC PHYLLITE (PG). Competent.													
		Foliation = 20-25°.		W.Av.	22.9	25.9	3.0	3.53	8.46	75.60			10.59	25.37	266.81
		55.6; 59: Fold noses.		W.Av.	27.4	39.6	12.2	1.06	PbZn						
		59.6: Sharp clean contact with bleached phyllite (Sb).		W.Av.	22.9	27.4	4.5	2.91	6.82	59.8					
		Contact = 5° - due to fold nose at 59m. Contact		W.Av.	39.6	56.4	16.8	4.78	10.44	85.32			80.37	175.45	1433.35
		angle is steep.		W.Av.	56.4	59.6	3.2	1.87	3.64	32.1			5.97	11.65	102.73

LOGGED BY _____ D.D.H. NO 76-U-142 PAGE 4

Interval From	Interval To	DESCRIPTION	Recovery	Sample NO	Interval From	Interval To	Sample Length	Assay Pb	Assay Zn	Assay Ag	Assay Au	Assay Cu	Assay x Pb	Assay x Zn	Assay x Ag
59.6	62.5	BLEACHED PHYLLITE (Sb) W/short interval of sericite phyllite	3.9		59.6	62.5	3.9								
		(S). Competent. Buff with greenish hue. Foliation = 45-50°													
		62.5: Gradual change to sericite phyllite (S).													
62.5	67.0	SERICITE PHYLLITE (S). Competent. Foliation = 20-25°.	4.5		62.5	67.0	4.5								
		No clear F_1 / F_2 relationship noted. Sporadic clots of Po.													
		67.0: Sharp clean contact with quartz-sulfide (P).													
		Contact = 55-60°.													
67.0	70.2	QUARTZ-SULFIDE (P) W/intervals of barren sericite 30 4	3.0	4230	67.0	70.2	3.2	2.24	4.45	36.34					
		phyllite ground @ 68-68.6. Foliation = 25-30°. Sulfides													
		as thin laminae.													
		70.2: Change to sericite phyllite (S). Contact broken													
		ground.													
70.2	91.4	SERICITE PHYLLITE (S). Competent. Foliation = 40-45°;	20.9		70.2	91.4	21.2								
		F_1 = 10° @ 77.9.													
		72.0: Shear.													
		82.3-89.9: Blebs of sporadic Po. F_2 = 60°; F_1 = 20°.													
		87-87.3: Bleached phyllite with biotite (?).													
		91.4: Sharp clean contact with Bleached Phyllite (Sb) = 85°.													

Interval From	Interval To	DESCRIPTION	Recovery	Sample NO	Interval From	Interval To	Sample Length	Assay Pb	Assay Zn	Assay Ag	Assay Au	Assay Cu	Assay x Pb	Assay x Zn	Assay x Ag
91.4	97.0	BLEACHED PHYLLITE (Sb). Competent. Silvery white with fuchsite spots. Intervals with chlorite and biotite. Foliation = 70-75°. Spots and laminae of Po following general foliation. 91.5-91.7: Dark brown colour. Biotite with bleached sericite. Biotite confined along quartz healed fissures and appear to disperse laterally following the general foliation. 95.5-96.5: Chloritic interval. Green stripes of chlorite following general 70-75° foliation. 97.0: Gradual change to quartz-sulfide (P).	5.6		91.4	97.0	5.6								
97.0	97.7	QUARTZ-SULFIDE (P). Competent. Foliation = 47°; F_1 = 10° (opposite direction of F_2). Sulfides as thin laminae and blebs in groundmass. 97.7: Gradual change to mineralized graphitic phyllite (PG).													
97.7	117.3	MINERALIZED GRAPHITIC PHYLLITE (PG). Competent. 25 4	2.1	4231	97.0	99.1	2.1	0.90	1.45	15.09					
		Foliation = 30-40°(F_2); F_1 = varigated orientation 25 4	1.5	4232	99.1	100.6	1.5	0.55	1.03	9.94			1.58	PbZn	
		due to fold noses from 10° to 0°. 20 2	1.5	4233	100.6	102.1	1.5	0.70	0.90	14.06			1.60	PbZn	
		101.9; 102.3; 103.4; 105; 109.7; 113: Fold noses. 20 2	1.5	4234	102.1	103.6	1.5	0.63	0.98	13.03			1.61	PbZn	
		106.7-109.7: Foliation becoming more regular and 25 4	1.6	4235	103.6	105.2	1.6	1.94	1.63	26.40			3.10	2.61	42.24

LOGGED BY _____ D.D.H. NO 76-U-142 PAGE 6

Interval From	Interval To	DESCRIPTION		Recovery	Sample NO	Interval From	Interval To	Sample Length	Assay Pb	Assay Zn	Assay Ag	Assay Au	Assay Cu	Assay x Pb	Assay x Zn	Assay x Ag
		uniform F_1 = 60°; F_2 = 30°.	25 4	1.5	4236	105.2	106.7	1.5	5.20	1.70	58.63			7.80	2.55	87.95
		117.3: Gradual increase in sulfide. Rx becoming	30 3	1.5	4237	106.7	108.2	1.5	0.80	0.90	22.29			1.70	PbZn	
		massive sulfide (M).	35 3	1.5	4238	108.2	109.7	1.5	0.05	0.23	20.23			0.28	PbZn	
			40 2	1.6	4239	109.7	111.3	1.6	0.05	0.30	18.17			0.35	PbZn	
117.3	118.5	MASSIVE SULFIDE (M) WITH FAINT COMPOSITIONAL BANDING	40 2	1.5	4240	111.3	112.8	1.5	0.08	0.25	8.91			0.33	PbZn	
		= 80-85°. Short intervals of porous variety with	25 4	1.5	4241	112.8	114.3	1.5	3.30	4.10	48.34					
		voids aligned = 80°.	30 3	1.5	4242	114.3	115.8	1.5	0.04	0.20	8.23					
		118.5: Change to massive sulfide with barite in	30 6	1.5	4243	115.8	117.3	1.5	2.63	4.15	46.29			3.95	6.23	69.44
		groundmass. Contact = 30°.	75 7	1.6	4244	117.3	118.9	1.6	4.00	6.38	64.46			6.40	10.21	103.14
			65 8	1.5	4245	118.9	120.4	1.5	2.13	4.05	25.37			3.20	6.08	38.06
118.5	128.7	MASSIVE SULFIDE W/BARITE IN GROUNDMASS (Mb).	60 8	1.5	4246	120.4	121.9	1.5	2.38	4.30	45.26			3.57	6.45	67.89
		Competent. Compositional banding Sph-Pb/Py-Ba = 75°.	70 8	1.5	4247	121.9	123.4	1.5	5.20	8.89	70.63			7.8	13.34	105.95
		Intervals of porous sulfides with voids aligned =	75 12	1.4	4248	123.4	125.0	1.6	6.69	12.04	91.89			10.70	19.26	147.02
		75-85° @ 124-125.	75 10	1.5	4249	125.0	126.5	1.5	4.65	8.13	71.66			6.98	12.20	107.49
		125-126: Sulfide breccia (MXs). Angular to sub-	30 6	1.9	4250	126.5	128.7	2.2	3.78	8.43	64.46			8.32	18.55	141.81
		rounded sulfides Ø = 2mm-1.5cm. Cemented by sul-														
		fides. Trace calcite in groundmass.														
		126.5-128.7: Sulfide breccia with quartz cementing material			W.Av.	97.0	103.6	4.5	1.60	PbZn						
		(MXq). Very angular sulfide fragments Ø = 1-			W.Av.	103.6	106.7	3.1	3.52	1.66	42.0			10.90	5.16	130.19
					W.Av.	106.7	112.8	6.1	0.66	1.66						
		1.5cm.			W.Av.	115.8	118.9	3.1	3.34	5.30	55.67			10.35	16.44	172.58
		128.7: Abrupt change to Graphitic phyllite (G). Contact			W.Av.	115.8	121.9	6.1	2.81	4.75	45.66			17.12	28.97	278.53
		broken ground.														

LOGGED BY _____ D.D.H. NO 76-U-142 PAGE 7

Interval From	Interval To	DESCRIPTION	Recovery	Sample NO	Interval From	Interval To	Sample Length	Assay Pb	Assay Zn	Assay Ag	Assay Au	Assay Cu	Assay x Pb	Assay x Zn	Assay x Ag
				W.Av.	121.9	128.7	6.8	4.97	9.32	73.9			33.80	63.35	502.27
128.7	152.4	GRAPHITIC PHYLLITE (G). Easily breaks into poker chips.	20.1		128.7	152.4	23.7								
		Foliation = 70-75°; F$_1$ = 10°.													
		135: Increasing calcite constituent in groundmass. Rx becoming calcitic graphitic phyllite (GK). Foliation = 60-65°; F$_1$ = 0-10° and usually marked by calcite. Blebs of Po.													
		149.2-149.4: Chloritic-calcitic interval with thin buff laminae of bleached sericite (Sbc + K). Foliation = 35-40°. Contacts clean and sharp = 40°.													
	152.4	END OF HOLE.													

DDH: FAGU142 -- 42 DEGREE PROFILE

(VIEW AZIMUTH = 312 DEGREES)

ELEV:1104 592226E ; 905181N

PLUNGE ANGLE IS 11.0 TREND ANGLE IS 312.0

CORRECTED COLLAR POSITION: X = 585.9 Z = 1103.7

SECTION NAME: 80W

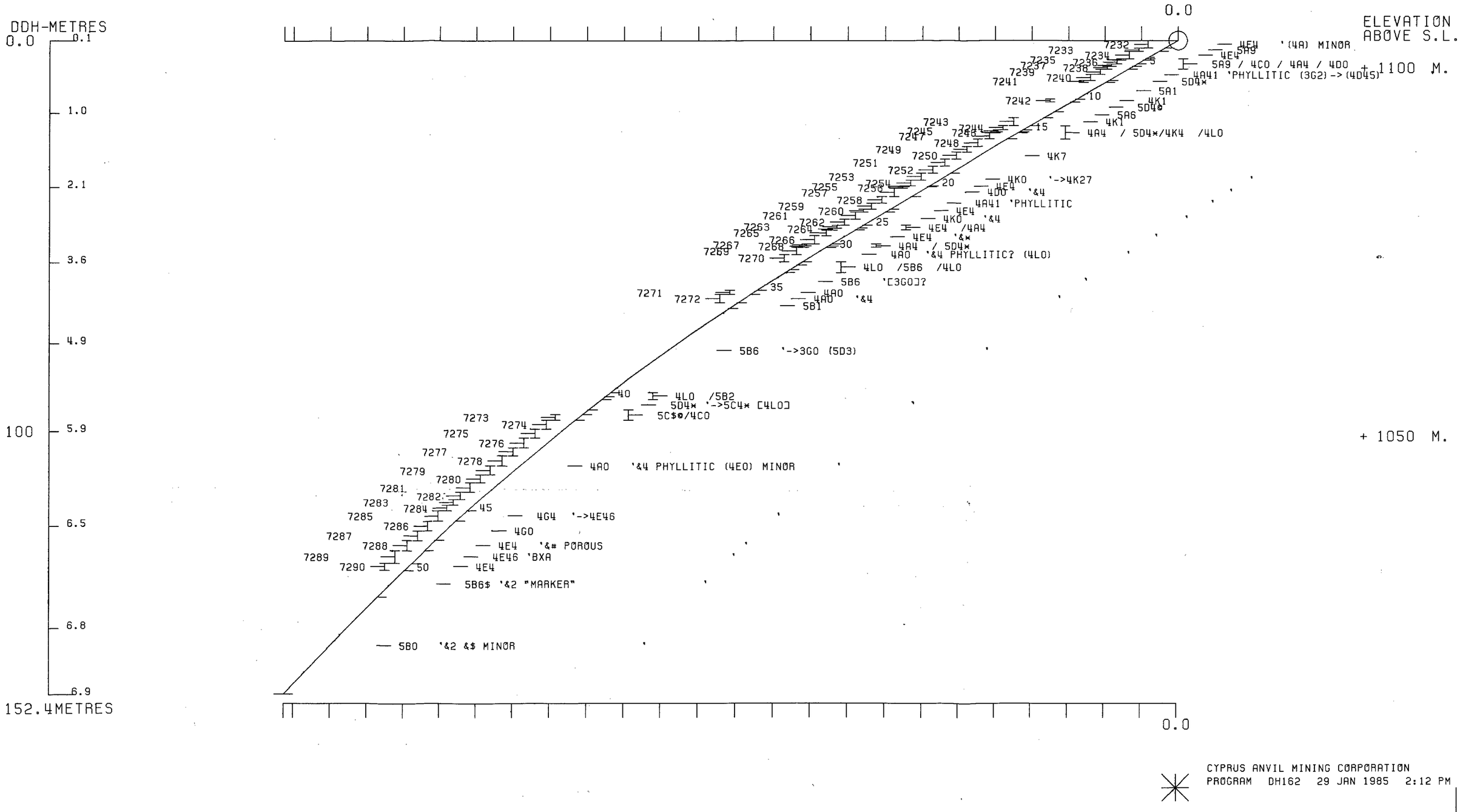

CYPRUS ANVIL MINING CORPORATION
PROGRAM DH162 29 JAN 1985 2:12 PM

DDH: FAGU142 -- 42 DEGREE PROFILE

(VIEW AZIMUTH = 312 DEGREES)

ELEV:1104 592226E ; 905181N

PLUNGE ANGLE IS 11.0 TREND ANGLE IS 312.0

CORRECTED COLLAR POSITION: X = 585.9 Z = 1103.7

SECTION NAME: 80W

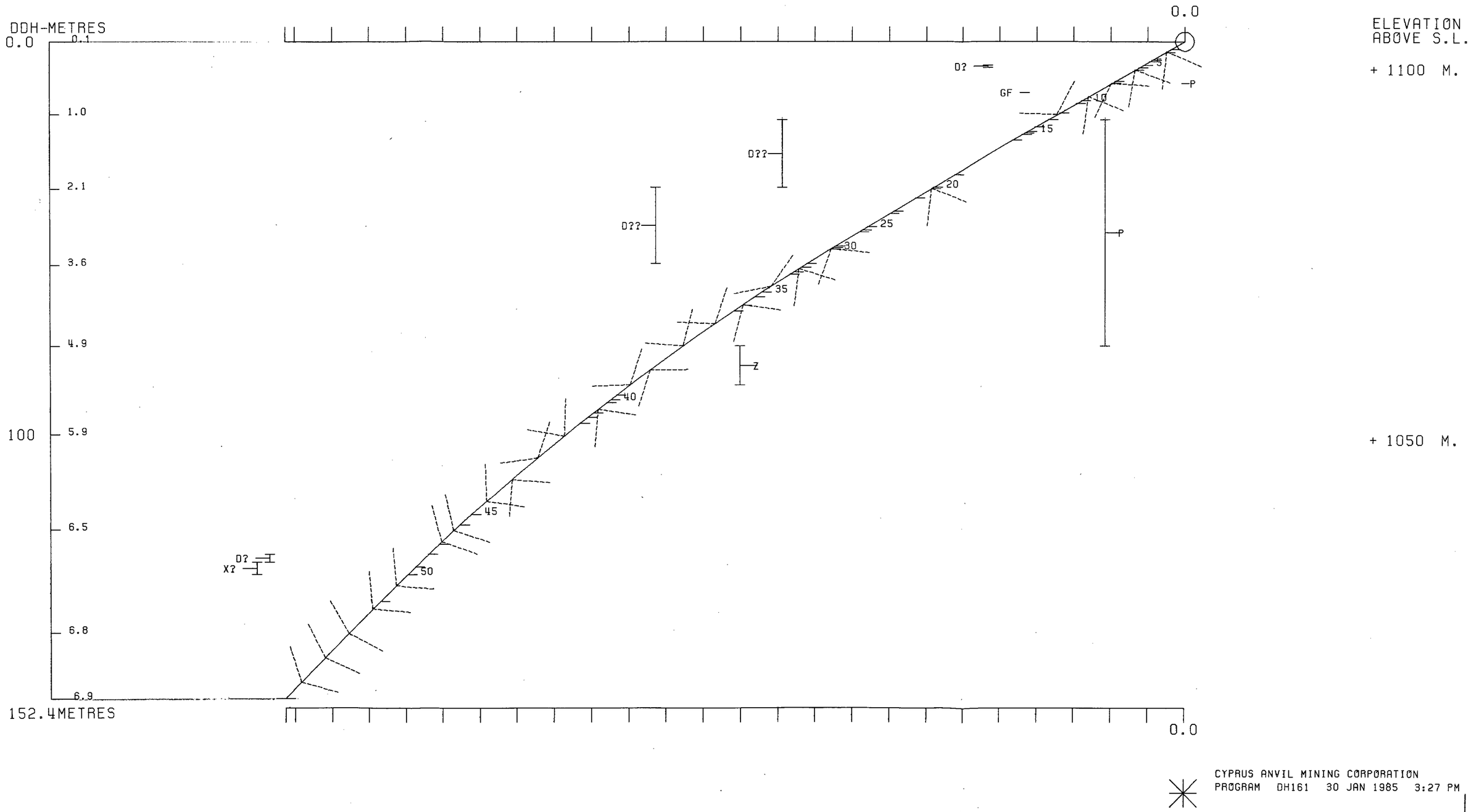

CYPRUS ANVIL MINING CORPORATION
PROGRAM DH161 30 JAN 1985 3:27 PM

76 U144

DRILL HOLE : FAGU144

NORTHING : 905,183.2

EASTING : 592,229.3

ELEVATION : 1,106.9

TOTAL DEPTH : 73.2

SECTION : W 80

R.F.E. : S2

RFE DIRECTION: 230

PLUNGE ANGLE : 11

PLUNGE DIRECT: 312

DHD CALC: 1

SS CALC: 0

DETAIL RECORD COUNTS:

NOS ORE-SAMPLES: 5

NOS DOWN-H-SURVEYS: 1

NOS DOWN-H-LITHOLOGY: 19

NOS DOWN-H-STRUCTURE: 15

NOS DOWN-H-FAULTS: 5

NOS DOWN-H-SPLINES: 1

NOS COMPOSITES: 0

DDH: FAGU144 UTM-N: 905,183.2 UTM-E: 592,229.3 UTM-ELEV: 1,106.9 TOTAL DEPTH: 73.2 SECTION: W 80
RFE: S2 RFE DIR: 230 PLUNGE ANGLES: 11 312 DHD CALC: 1 SS CALC: 0

DEPTHS FROM	DEPTHS TO	SAMPLE NO.	INT.	REC.	ROCK UNIT	S.G. PULP	CU %	PB %	ZN %	AG(AA) G/MT	AG(FA) G/MT	AU(FA) G/MT	PO %	PY %	TOT FE	BAO %	HG %	MN %	AS %	BA %	S.G. W.R.
57.3	57.9	08431	.6	.6	4B4	2.93	.01	2.60	5.90	42.00		.69	2	1	3						
57.9	59.4	08432	1.5	1.5	4A34	3.27	.05	3.60	7.80	61.00		.82	2	28	31						
59.4	61.0	08433	1.6	1.2	4A34	3.50	.07	4.10	6.10	72.00	74.00	1.92	2	15	17						
61.0	61.2	08434	.2	.2	4H14	3.93	.05	5.70	7.30	96.00		1.10	21	8	30						
64.1	65.9	08435	1.8	1.8	4A14	2.98	.02	1.89	3.50	32.00		.96	1	8	10						
WEIGHTED AVERAGE																					
57.3	61.2		3.9	3.5		3.34	.05	3.75	6.78	64.38	30.35	1.26	3	17	21						
64.1	65.9		1.8	1.8		2.98	.02	1.89	3.50	32.00		.96	1	8	10						

DDH: FAGU144 UTM-N: 905,183.2 UTM-E: 592,229.3 UTM-ELEV: 1,106.9 TOTAL DEPTH: 73.2 SECTION: W 80
RFE: S2 RFE DIR: 230 PLUNGE ANGLES: 11 312 DHD CALC: 1 SS CALC: 0

DEPTH	ZENITH	AZIMUTH
0.000	39.800	45.100

DDH: FAGU144 UTM-N: 905,183.2 UTM-E: 592,229.3 UTM-ELEV: 1,106.9 TOTAL DEPTH: 73.2 SECTION: W 80
RFE: S2 RFE DIR: 230 PLUNGE ANGLES: 11 312 DHD CALC: 1 SS CALC: 0

DEPTH	UNIT	CODE	DESC	RECOVERY	IND
17.9	0001	5A0		0.0	1
18.8	0002	5A3		0.0	1
44.9	0003	5A0		0.0	1
46.2	0004	5D4	->5D4@	0.0	1
47.4	0005	5A1	(5A0) MINOR	0.0	1
50.3	0006	5D4	SHARP UPPER & GRAD LOWER	0.0	1
50.8	0007	5A0		0.0	1
51.4	0008	5D4	GRAD UPPER & SHARP LOWER	0.0	1
52.2	0009	5A0		0.0	1
53.5	0010	5D4		0.0	1
55.8	0011	5A0		0.0	1
57.3	0012	5D4		0.0	1
57.9	0013	4B4		0.0	1
60.8	0014	4A43		0.0	1
61.2	0015	4H14	BXA	0.0	1
64.1	0016	5A6	->5B26	0.0	1
65.9	0017	4A14	[4A0->4C0]	0.0	1
66.1	0018	5D4*	[4L0]	0.0	1
73.2	0019	5B26	[5A6]	0.0	1

DDH: FAGU144 UTM-N: 905,183.2 UTM-E: 592,229.3 UTM-ELEV: 1,106.9 TOTAL DEPTH: 73.2 SECTION: W 80
RFE: S2 RFE DIR: 230 PLUNGE ANGLES: 11 312 DHD CALC: 1 SS CALC: 0

DDH	F DEPTH	T DEPTH	FEAT	SYMTRY	S0 ANGLE	S0 DIRECT	S1 ANGLE	S1 DIRECT	S2 ANGLE	S2 DIRECT	RFE CDE	DHDC	SDC	PROCESS
FAGU144	0.0	3.0	CS2		0	0	0	0	43	230	C	1	0	0
FAGU144	0.0	9.1	CS2		0	0	0	0	65	230	C	1	0	0
FAGU144	0.0	13.7	CS2		0	0	0	0	57	230	C	1	0	0
FAGU144	0.0	20.0	CS2		0	0	0	0	62	230	C	1	0	0
FAGU144	0.0	25.9	CS2		0	0	0	0	61	230	C	1	0	0
FAGU144	0.0	30.5	CS2		0	0	0	0	48	230	C	1	0	0
FAGU144	0.0	35.3	CS2		0	0	0	0	36	230	C	1	0	0
FAGU144	0.0	39.4	CS2		0	0	0	0	41	230	C	1	0	0
FAGU144	0.1	45.0	CS2	Z	0	0	0	0	62	230	C	1	0	0
FAGU144	0.0	50.3	CS2		0	0	0	0	50	230	C	1	0	0
FAGU144	0.0	54.9	CS2		0	0	0	0	55	230	C	1	0	0
FAGU144	45.0	57.3	CS2	S	0	0	0	0	0	0	C	1	0	0
FAGU144	0.0	59.7	CS2		0	0	0	0	20	230	C	1	0	0
FAGU144	0.0	65.5	CS2		0	0	0	0	37	230	C	1	0	0
FAGU144	0.0	69.6	CS2		0	0	0	0	49	230	C	1	0	0

DDH: FAGU144 UTM-N: 905,183.2 UTM-E: 592,229.3 UTM-ELEV: 1,106.9 TOTAL DEPTH: 73.2 SECTION: W 80
RFE: S2 RFE DIR: 230 PLUNGE ANGLES: 11 312 DHD CALC: 1 SS CALC: 0

DDH	F DEPTH	T DEPTH	FEAT	REC CD	PARLL	UPPER PLANE		INTERNAL PLANE		LOWER PLANE		DHD
FAGU144	53.5	55.8	1GS			0	0	0	0	0	3	1
FAGU144	61.0	61.2	D			0	0	0	0	0	0	1
FAGU144	61.2	64.1	B1G			0	0	0	0	0	3	1
FAGU144	64.1	65.9	XG			37	0	0	0	37	0	1
FAGU144	66.1	73.2	RGB			0	0	0	0	0	0	1

CYPRUS ANVIL MINING CORPORATION

DIAMOND DRILL CORE LOG

Hole Number: 76-U144

Project: GRUM - RE-LOG

Location: _____

Claim: _____

UTM ~~Terr. Plane~~ Co-ords.: 6,905,183.2 N

592,229.3 E

Grid Co-ords.: 80W/7N

_____

Elevation: 1106.9

Total Depth: _____

Fabric Orientation Diagram:

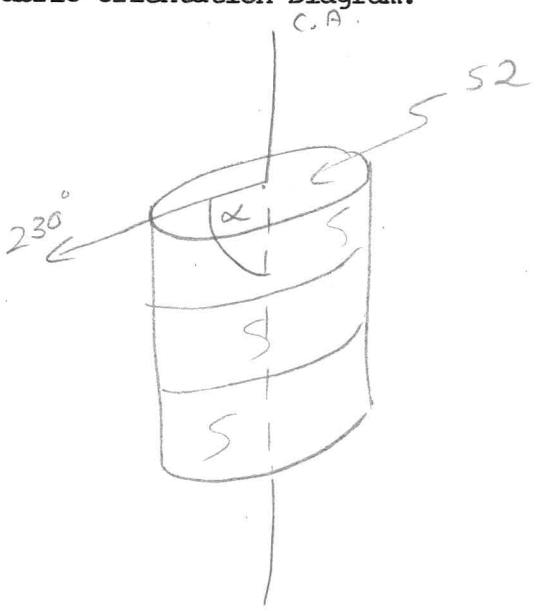

All symmetry determinations looking

NW with S2 dipping

SW with dip azimuth 230.

Purpose: _____

Re Logged by: DJH Date(s) Logged: _____

Drilling Contractor: _____

Core:	Size	From	To	Collar Cased and Capped:
	BQ	0	73.2	

Started: _____ Completed: _____

Cyprus Anvil Mining Corp.
Diamond Drill Core Log

DDH 76-U144

Code	Drillhole	Elevation	Northing	Easting	Comments
	2 8	10 16	17 24	25 32	34 48
T	76-U144	1196.9	9051833.2	5922299.3	METRES

change to 45.1 to correspond to True North rather than UTM North — HCP July/83

Code	Drillhole	Depth		Zenith Angle		True Azimuth		Comments
	2 8	10	14	22	26	28	32	34 56
R	76-U144	0	0	39.8		43.5		ATCOLLAR
R				.		.		
R				.		.		
R				.		.		
R				.		.		
R				.		.		
R				.		.		
R				.		.		
R				.		.		
R				.		.		
R				.		.		
R				.		.		
R				.		.		
R				.		.		
R				.		.		
R				.		.		

Code	Drillhole	Comments, Errant Remarks, Snivellings and/or Lewd Suggestions
	2 8	10 47

DDH 76-U-144 (2 … 8)

Cyprus Anvil Mining Corp.
Lithologic Log

Logged By: DJH

Code	From	To	Unit	Code	Description
1	10–14	16–20	22 23	25–27	
L	0	1179	1	5A10	
L	1179	1188	2	5A13	
L	1188	1449	3	5A10	
L	1449	1462	4	5D14	→ 5D43 ($Fe, Mg\ (CO_3^=)$); minor mariposite; sharp upper ct., grad. lower ct.
L	1462	1474	5	5A1	w/ minor 5A0
L	1474	1503	6	5D14	as unit 4; again note sharp upper ct. and grad lower ct.; CAN WE USE THIS RELATIONSHIP AS A TOPS INDICATOR?
L	1503	1508	7	5A10	
L	1508	1514	8	5D14	as units 4&6; sl. grad. upper ct and sharp lower ct.; OVERTURNED?
L	1514	1522	9	5A10	
L	1522	1535	10	5D14	as units 4,6,8&8; sharp cts. @ both ends
L	1535	1558	11	5A10	minor shear zones & gouge
L	1558	1573	12	5D14	as units 4,6,8&10; sharp cts @ both ends.
L	1573	1579	13	4B14	
L	1579	1610	14	4A14	13 3 fold noses of 5D4
L	1610	1612	15	4H1	w/ sil. frags (4C&9A) floating in mass. po.
L	1612	1641	16	5A16	→ 5B26 locally; interval generally broken core w/ some gouge.
L	1641	1659	17	~~4A10~~ → 4A14	minor bxia w/ graphitic matrix; → 4C towards E.O.I.; BRECCIA CNT ~ 11 S_2
L	1659	1661	18	~~4K0~~ → 5D4*	* because of w/ mariposite
L	1661	1732	19	5A16	? 5B26?; difficult to determine lithology due to decrepit nature of core — only sand, mud and rock chips rec'd.; if 5A then only weakly graphitic
		EOH			

DDH 76-U-44 (2 / 8)

Cyprus Anvil Mining Corp.
Structural Log

Logged By: DJH

Code	From	To	Feature	Sym	S_1 Dip Direct.	S_2 Dip Direct.	Description
	10 14	16 20	22 24	26	28 32	34 38	
S		130	CIS12			413 2310	Z region 0 - 45.0 m.
S		191	CIS12			615 2310	
S		1137	CIS12			517 2310	
S		1210	CIS12			612 2310	
S		1259	CIS12			611 2310	
S		1305	CIS12			418 2310	
S		1353	CIS12			316 2310	
S		1394	CIS12			411 2310	
S		1450	IF12	3		612 2310	S region 45.0 - 57.3
S		1503	CIS12			510 2310	
S		1549	CIS12			515 2310	
S		1573	IF12	S			No overall sym. obtainable
S		1597	CIS12			210 2310	57.3 - 73.2 due to
S		1655	CIS12			317 2310	decrepit nature of core
S		1696	CIS12			419 2310	(2 Zs and 1S observed)
		EOH					

DDH 76-U-144 (2 / 8)

Cyprus Anvil Mining Corp.
Geochemical Log (Sampler's Copy)

Logged By: DJH

Sampled By:

Code	From	To	Sample No.	Description
1	10 14	16 20	22 27	Length Rec. Unit
P	1573	1594	142512	2.1 1.9
P	1594	1613	142513	1.9 1.5
P	1643	1659	142514	1.6 1.5

Logged 1950/ Checked & Sampled 1981

DDH EAGU144 Cyprus Anvil Mining Corp

Page ____ of ____

Logged by GG

ASSAY LOG (SAMPLER'S COPY) Date 1 August/81 Sampled by ____

UNITS = Metres

CODE	FROM	TO	SAMPLE	INTR.	REC (m)	UNIT	DESCRIPTION
1	10 14	16 20	22 26	28 30	32 34	36 40	42
P	157.3	157.9	84311	06	06	AB41	
P	157.9	159.4	84312	15	15	AA34	
P	159.4	161.0	84313	16	12	AA34	
P	161.0	161.2	84314	02	02	AH11	
P	164.1	165.0	84315	18	18	AA14	
							END OF HOLE @ 173.8m

C.A.M.C. 1981 - E - 5

DDH FAGU144 (2 Meters 8)

Cyprus Anvil Mining Corp.

Structural Log

Page _____ of _____

Date: _____ Logged By: _____

Code	From	To	Feature	Sym	S_0 Dip Direct.	S_1 Dip Direct.	S_2 Dip Direct	Description
1	10 14	16 20	22 24	26	28 32	34 38	40 44	
	535	558	IGS					minor shears & gouge
	612	641	BIG					broken core, some gouge
	641	659	XG		37 [illegible]		37 [illegible]	bxia w/ graphitic matrix // S_2
	661	732	RGB					decrepit core — sand, mud
								chips only
	610	612	D					

C.A.M.C. 1981 - E - 4

DIAMOND DRILL RECORD

LOGGED BY ALEXANDER YOUNG PO D.D.H. Nº 76-U-144 PAGE 1

PROPERTY GRUM JOINT VENTURE

LATITUDE 10,978.674 80W STARTED AUGUST 12, 1976

DEPARTURE 7,541.299 7N COMPLETED AUGUST 13, 1976

ELEVATION 1,114.349 PROPOSED DEPTH 500' - 152.4m

ULTIMATE DEPTH - 73.2m

HOLE SURVEY:		
DEPTH	BEARING	DIP
COLLAR	42° 41'	+51° 19'

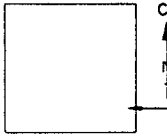

CLAIM Nº

NOTE: Hole abandoned due to squeezing ground and caved-in condition.

DIRECTION AND DISTANCE FROM N.E. CLAIM POST

TOTAL C ORE RECOVERY: 85.2%

Interval From	Interval To	DESCRIPTION	Recovery	Sample Nº	Interval From	Interval To	Sample Length	Assay Pb	Assay Zn	Assay Ag	Assay Au	Assay Cu	Assay x Pb	Assay x Zn	Assay x Ag
0	45.0	GRAPHITIC PHYLLITE (G). Competent, brittle. Foliation = 50-	40.2		0	45.0	45.0								
		55°; F_1 = 0-10°. Sporadic blebls of sulfide-Py and Po.													
		32.5; 36; 36.5; 38: Fold noses.													
		33.5-35.1: Change in foliation. F_2 = 60-65°; F_1 = 0-5°.													
		41.1-41.4: Shear.													
		45.0: Sharp clean contact with bleached phyllite (Sb) = 45°.													
45.0	46.2	BLEACHED PHYLLITE (Sb). Competent. Buff with greenish hue	1.2		45.0	46.2	1.2								
		laminae alternating with quartz. Foliation = 40-45°. No													
		F_1/F_2 relationship noted.													
		46.2: Gradual change to Graphitic Phyllite. Contact is													
		increasing inter-lamination with graphite. Transi-													
		tion zone is approximately 5cm long.													
46.2	47.2	GRAPHITIC PHYLLITE. Competent. Foliation = 50-55°; F_1 =	0.8		46.2	47.2	1.0								
		5-10°. Blebs of sulfides.													
		47.2: Sharp change to Bleached Phyllite = 40°.													

Interval From	Interval To	DESCRIPTION	Recovery	Sample Nº	Interval From	Interval To	Sample Length	Assay Pb	Assay Zn	Assay Ag	Assay Au	Assay Cu	Assay x Pb	Assay x Zn	Assay x Ag
47.2	50.3	BLEACHED PHYLLITE (Sb). Same characteristics as in 45-46.2	3.0		47.2	50.3	3.1								
		run. Spots of fuchsite.													
		50.3: Sharp change to Graphitic unit. Contact broken ground													
50.3	52.1	GRAPHITIC PHYLLITE (G). Competent. Foliation = 50-55°;	1.5		50.3	52.1	1.8								
		F_1 = 0-5° but not very well developed (only faint crenulation													
		between F_1). Short intercalated bleached phyllite run at													
		51.0-51.4.													
		52.1: Sharp contact with bleached phyllite (Sb) = 30°.													
		Contact marked by 1.5cm quartz.													
52.1	53.5	BLEACHED PHYLLITE (Sb). Competent. Light gray to buff.	1.4		52.1	53.5	1.4								
		Foliation = 35°. No F_1 / F_2 relationship.													
		53.5: Sharp clean contact with graphitic phyllite = 30°.													
53.5	55.8	GRAPHITIC PHYLLITE (G). Fissile, breaks into poker chips.	2.0		53.5	55.8	2.3								
		Foliation = 45-50°; F_1 = 0-10°.													
		64; 64.6: Fold noses.													
		55.8: Sharp contact with bleached phyllite = 50°.													

Interval From	Interval To	DESCRIPTION	Recovery	Sample NO	Interval From	Interval To	Sample Length	Assay Pb	Assay Zn	Assay Ag	Assay Au	Assay Cu	Assay x Pb	Assay x Zn	Assay x Ag
55.8	57.3	BLEACHED PHYLLITE (Sb). Competent. Buff with white felsic	1.3		55.8	57.3	1.5								
		mineral laminae. Foliation = 70°; F 1 = 0-5°.													
		57.0: Fold nose.													
		57.3: Sharp contact with quartz-sulfide. Contact is wavy													
		parallel to core axis. Actually fold nose with one													
		side as quartz-sulfide and the other side is bleached													
		phyllite.													
57.3	61.3	QUARTZ-SULFIDE (P) WITH BLEACHED PHYLLITE (Sb), 25 10	1.9	4252	57.3	59.4	2.1	3.15	6.65	48.34			6.62	13.97	101.51
		nosing in and out. Foliation = 0-80° in a series of 30 6	1.5	4253	59.4	61.3	1.9	5.10	7.16	74.74			9.69	13.60	142.01
		fold nose closures. Po and Mgtt blebs with Py.		W.Av.	57.3	61.3	4.0	4.08	6.89	60.88			16.31	27.57	243.52
		59.4-61.3: Groundmass includes graphitic laminae. Rx unit		W.Av.	58.3	61.3	3.0	4.39	6.97	65.1			13.16	20.92	195.18
		is mineralized phyllite (PG). Foliation = 25°.													
		61.3: Gradual change to graphitic sericite phyllite (SG).													
61.3	64.3	GRAPHITIC SERICITE PHYLLITE (SG). Broken soft core.	2.5		61.3	64.3	3.0								
		Foliation = 25-30°; F 1 = 0-10°.													
		63.0: Small fault. Dark gray sticky gouge.													
		63.8-64: Shear? Small flakes of graphite.													
		64.3: Gradual change to quartz-sulfide with trace graphite.													

LOGGED BY _____ D.D.H. NO 76-U-144 PAGE 4

Interval From	Interval To	DESCRIPTION	Recovery	Sample NO	Interval From	Interval To	Sample Length	Assay Pb	Assay Zn	Assay Ag	Assay Au	Assay Cu	Assay x Pb	Assay x Zn	Assay x Ag
64.3	65.9	QUARTZ-SULFIDE WITH THIN GRAPHITIC LAMINAE (PG). 25 8	1.5		64.3	65.9	1.6	2.05	3.70	27.43					
		Competent. Foliation = 80° followed by sulfide laminae-													
		could be the F .													
		65-65.5: Sulfide Bx. Ø = 1mm-1 cm. Angular to sub-rounded													
		cemented by graphite. First contact = 25°;													
		Second contact broken ground.													
		65.9: Sharp change to bleached phyllite = 45°.													
65.9	67.1	BLEACHED PHYLLITE (Sb). Broken core. Buff with prominent	0.6		65.9	67.1	1.2								
		fuchsite spots/laminae.													
		67.1: Change to graphitic phyllite (G). Contact very broken													
		ground with clay.													
67.1	73.2?	GRAPHITIC PHYLLITE (G). Combined sand, mud, flakes. No	3.0		67.1	73.2	6.1								
		gouge noted.													
	73.2?	END OF HOLE.													
		NOTE: Ground caved in after drill rods were pull out to													
		change bit. Driller not able to push to original depth but													
		only up to 67.1. The 73.2 (?) run is excess interval from													
		71.6 which was definitely reached and recorded.													

CYPRUS ANVIL MINING CORPORATION
PROGRAM DH162 29 JAN 1985 2:15 PM

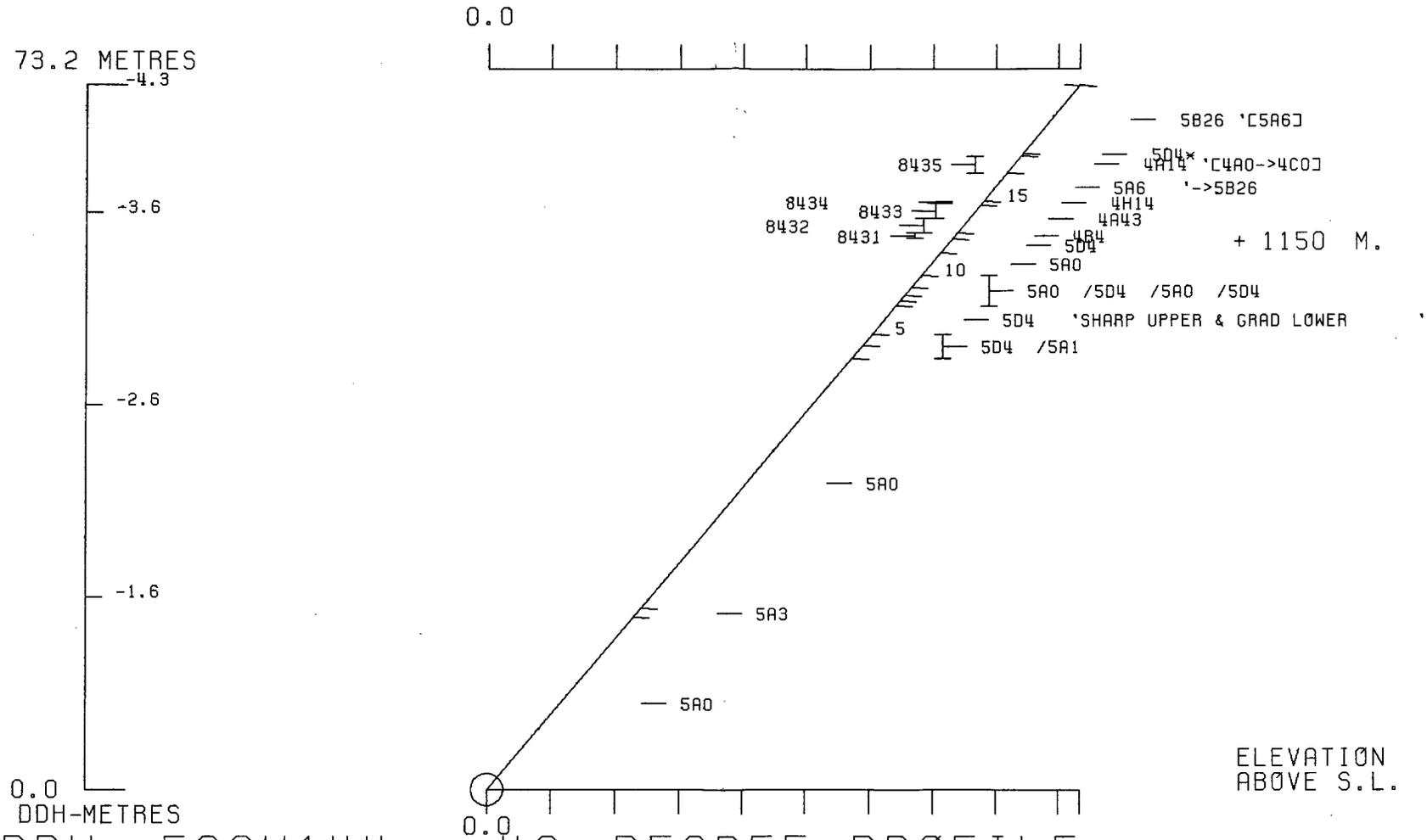

DDH: FAGU144 -- 42 DEGREE PROFILE

(VIEW AZIMUTH = 312 DEGREES)

ELEV:1107 592229E ; 905183N

PLUNGE ANGLE IS 11.0 TREND ANGLE IS 312.0

CORRECTED COLLAR POSITION: X = 589.7 Z = 1106.8

SECTION NAME: 80W

CYPRUS ANVIL MINING CORPORATION
PROGRAM DH161 30 JAN 1985 3:29 PM

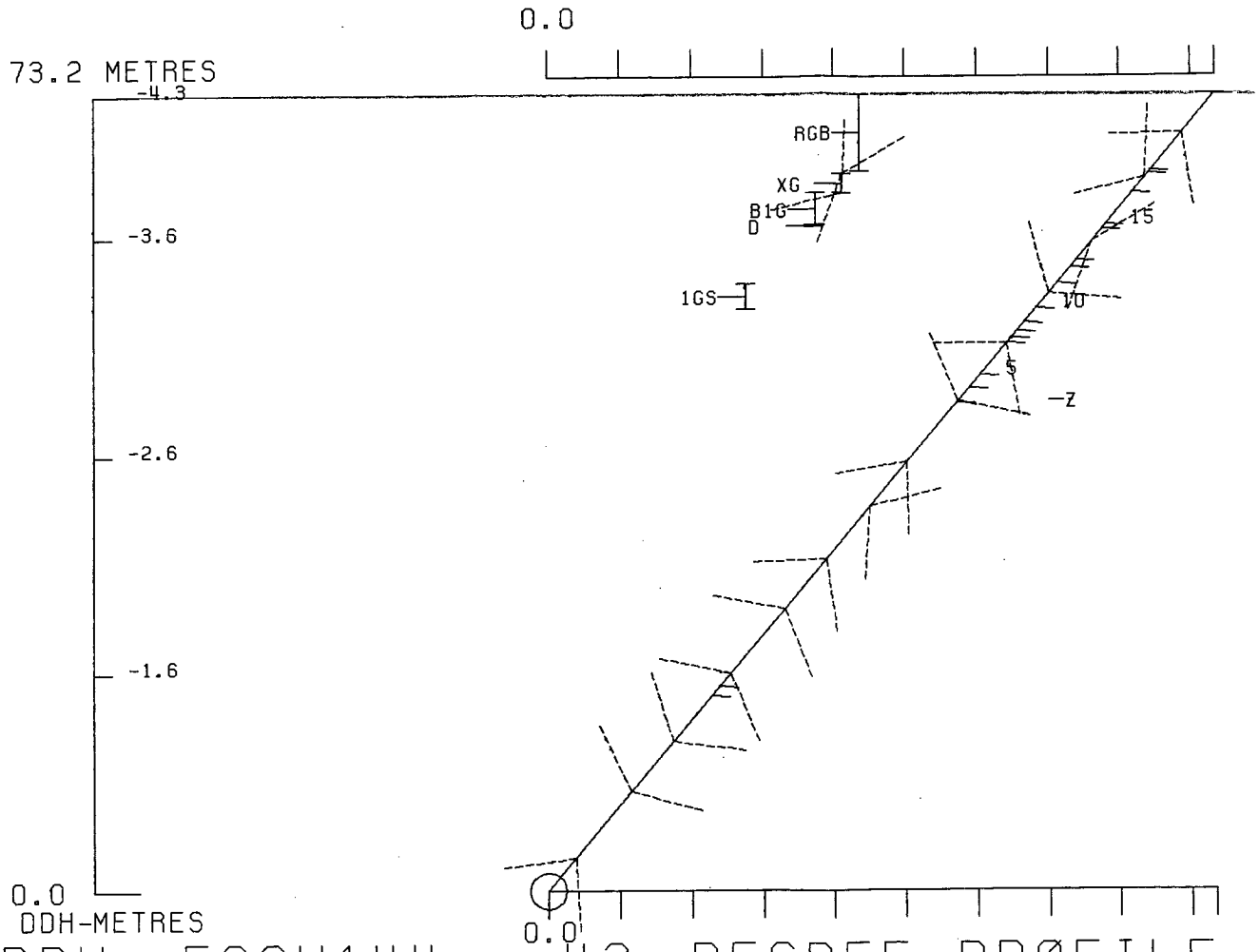

+ 1150 M.

ELEVATION
ABOVE S.L.

DDH: FAGU144 -- 42 DEGREE PROFILE

(VIEW AZIMUTH = 312 DEGREES)

ELEV:1107 592229E ; 905183N

PLUNGE ANGLE IS 11.0 TREND ANGLE IS 312.0

CORRECTED COLLAR POSITION: X = 589.7 Z = 1106.8

SECTION NAME: 80W

DDH: FAGU140 -- 42 DEGREE PROFILE

(VIEW AZIMUTH = 312 DEGREES)

ELEV:1103 592229E ; 905183N

PLUNGE ANGLE IS 11.0 TREND ANGLE IS 312.0

CORRECTED COLLAR POSITION: X = 589.2 Z = 1103.3

SECTION NAME: 80W

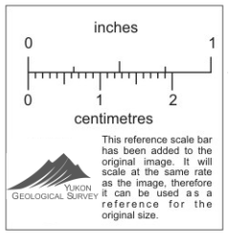

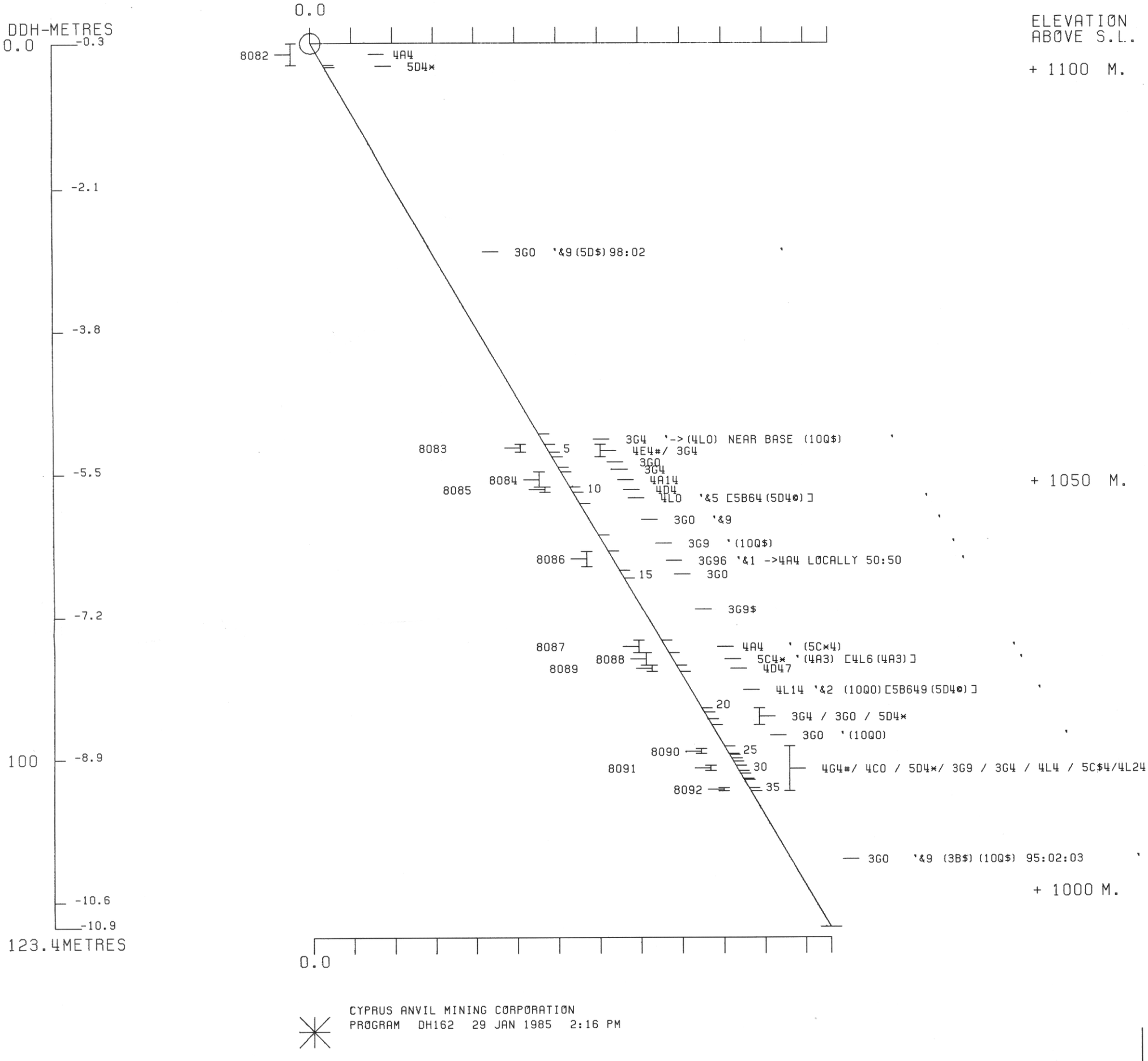

CYPRUS ANVIL MINING CORPORATION
PROGRAM DH162 29 JAN 1985 2:16 PM

DDH: FAGU140 -- 42 DEGREE PROFILE

(VIEW AZIMUTH = 312 DEGREES)

ELEV:1103 592229E ; 905183N

PLUNGE ANGLE IS 11.0 TREND ANGLE IS 312.0

CORRECTED COLLAR POSITION: X = 589.2 Z = 1103.3

SECTION NAME: 80W

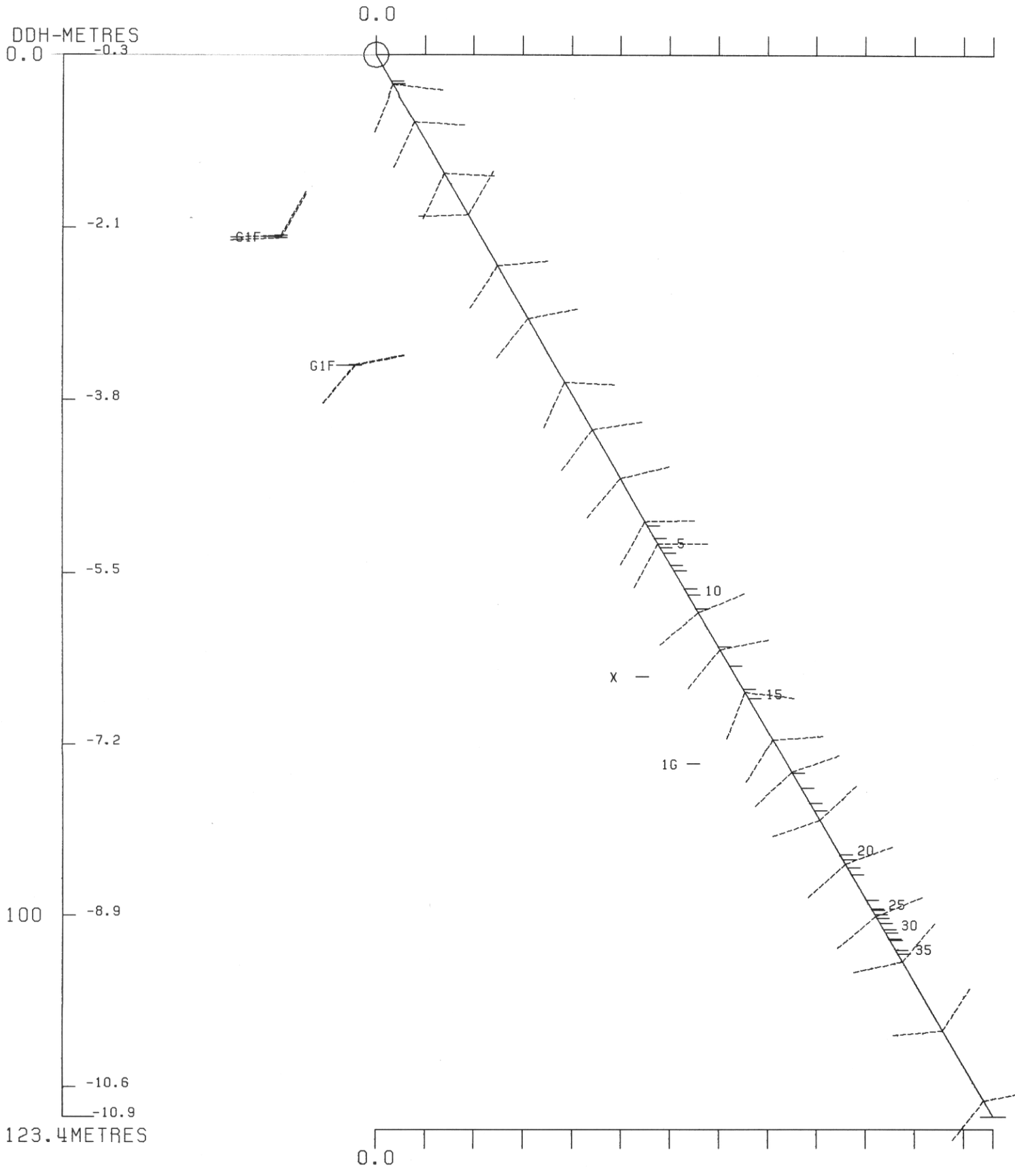

ELEVATION ABOVE S.L.

+ 1100 M.

+ 1050 M.

+ 1000 M.

CYPRUS ANVIL MINING CORPORATION
PROGRAM DH161 30 JAN 1985 3:30 PM

inches
0 1
0 1 2
centimetres
YUKON GEOLOGICAL SURVEY
This reference scale bar has been added to the original image. It will scale at the same rate as the image, therefore it can be used as a reference for the original size.

DDH: FAGA236 -- 42 DEGREE PROFILE

(VIEW AZIMUTH = 312 DEGREES)

ELEV:1304 592226E : 905267N

PLUNGE ANGLE IS 11.0 TREND ANGLE IS 312.0

CORRECTED COLLAR POSITION: X = 649.6 Z = 1315.3

SECTION NAME: 80W

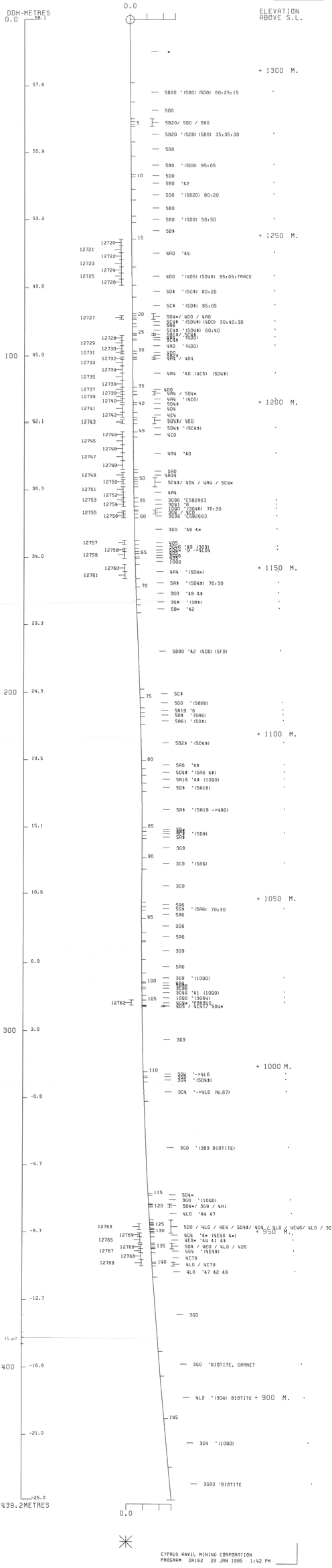

CYPRUS ANVIL MINING CORPORATION
PROGRAM DH162 29 JAN 1985 1:42 PM

DDH: FAGA236 -- 42 DEGREE PROFILE

(VIEW AZIMUTH = 312 DEGREES)

ELEV:1304 592226E : 905267N

PLUNGE ANGLE IS 11.0 TREND ANGLE IS 312.0

CORRECTED COLLAR POSITION: X = 649.6 Z = 1315.3

SECTION NAME: 80W

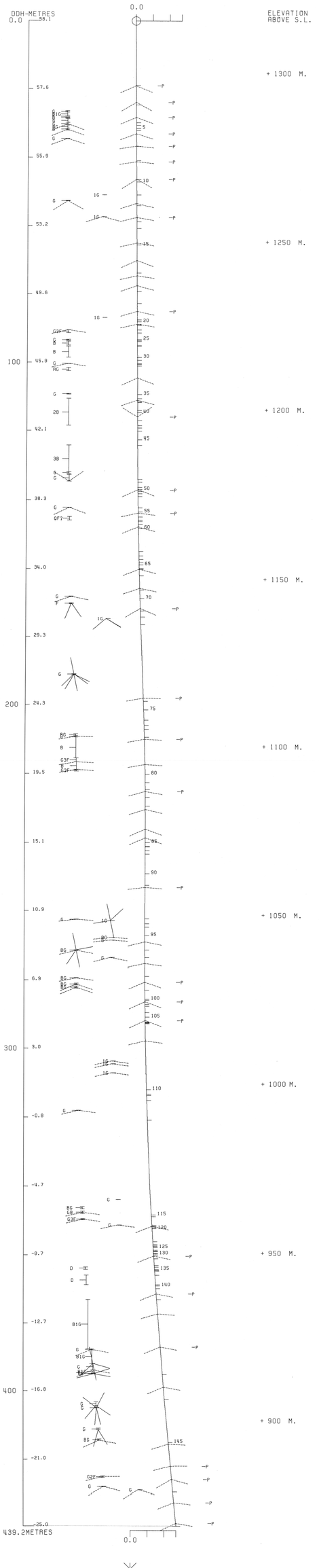

CYPRUS ANVIL MINING CORPORATION
PROGRAM DH161 30 JAN 1985 9:16 AM

DDH: FAGA214 --42 DEGREE PROFILE

(VIEW AZIMUTH = 312 DEGREES)

ELEV:1302 592345E ; 905322N

PLUNGE ANGLE IS 11.0 TREND ANGLE IS 312.0

CORRECTED COLLAR POSITION: X = 769.9 Z = 1303.3

SECTION NAME: 80W

DDH-METRES

ELEVATION ABOVE S.L.

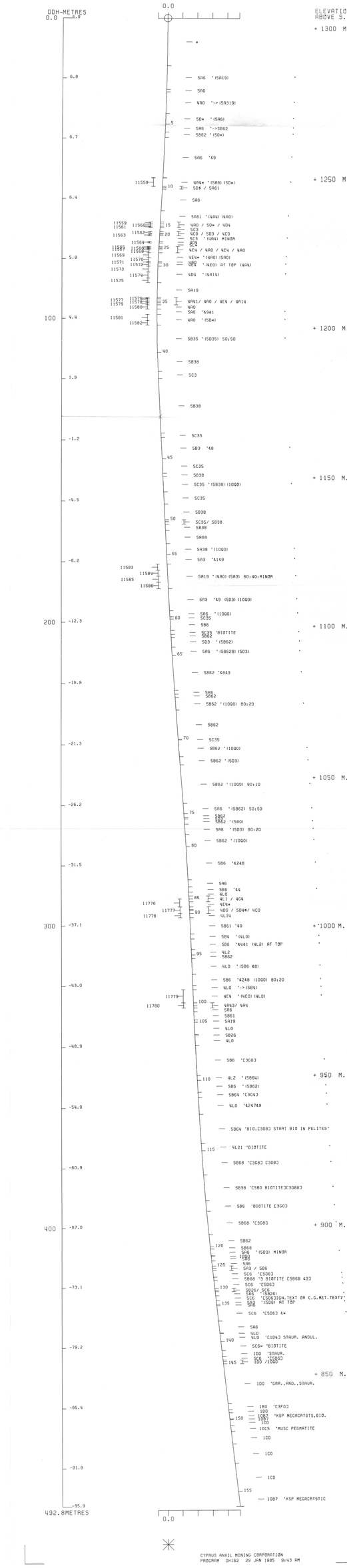

CYPRUS ANVIL MINING CORPORATION
PROGRAM DH162 29 JAN 1985 9:43 AM

DDH: FAGA214 -- 42 DEGREE PROFILE

(VIEW AZIMUTH = 312 DEGREES)

ELEV:1302 592345E : 905322N

PLUNGE ANGLE IS 11.0 TREND ANGLE IS 312.0

CORRECTED COLLAR POSITION: X = 769.9 Z = 1303.3

SECTION NAME: 80W

DDH-METRES

ELEVATION ABOVE S.L.

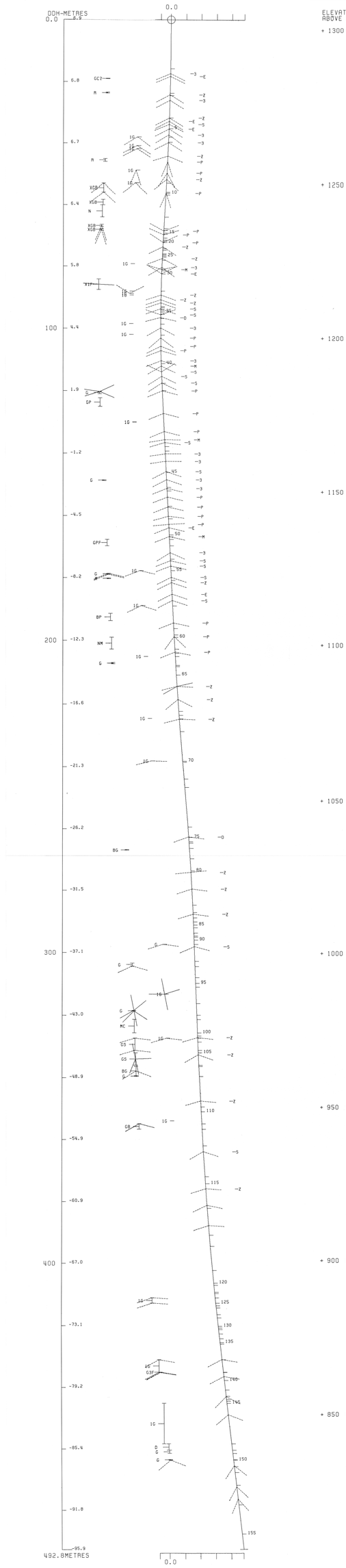

CYPRUS ANVIL MINING CORPORATION
PROGRAM DH181 29 JAN 1985 9:47 AM

DDH: FAGA087 -- 42 DEGREE PROFILE

(VIEW AZIMUTH = 312 DEGREES)

ELEV:1305 592161E ; 905199N

PLUNGE ANGLE IS 11.0 TREND ANGLE IS 312.0

CORRECTED COLLAR POSITION: X = 555.9 Z = 1316.7

SECTION NAME: 80W

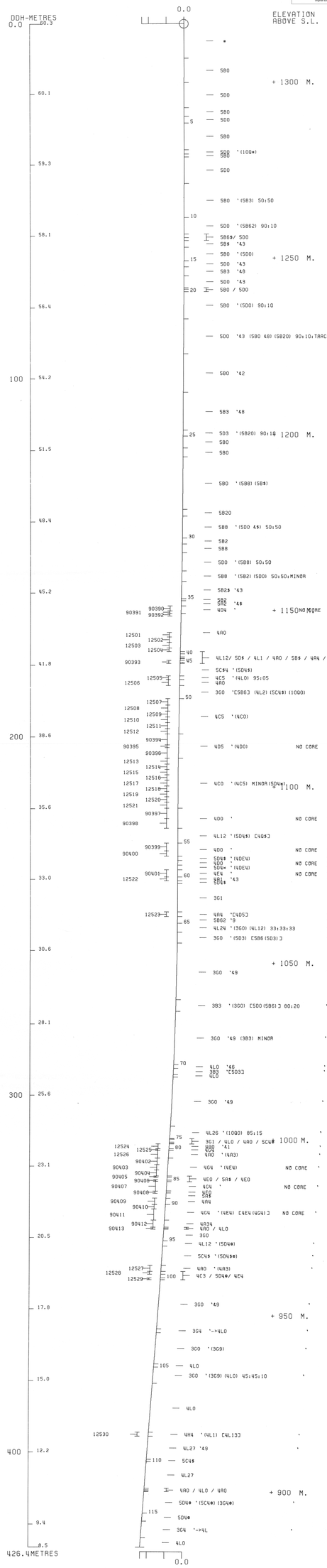

CYPRUS ANVIL MINING CORPORATION
PROGRAM DH182 29 JAN 1985 1:39 PM

DDH: FAGA087 -- 42 DEGREE PROFILE

(VIEW AZIMUTH = 312 DEGREES)

ELEV:1305 592161E ; 905199N

PLUNGE ANGLE IS 11.0 TREND ANGLE IS 312.0

CORRECTED COLLAR POSITION: X = 555.9 Z = 1316.7

SECTION NAME: 80W

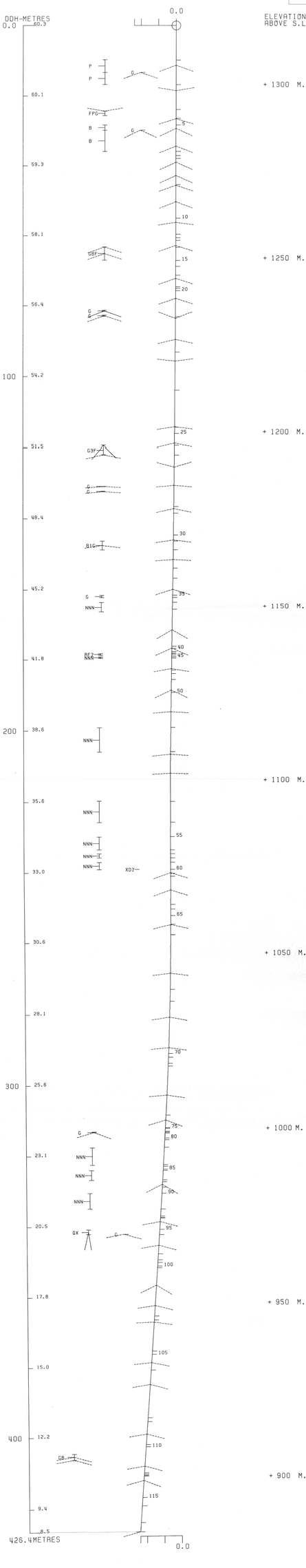

CYPRUS ANVIL MINING CORPORATION
PROGRAM DH101 30 JAN 1985 9:14 AM

DDH: FAGA085 -- 42 DEGREE PROFILE

(VIEW AZIMUTH = 312 DEGREES)

ELEV:1308 592120E ; 905155N

PLUNGE ANGLE IS 11.0 TREND ANGLE IS 312.0

CORRECTED COLLAR POSITION: X = 495.7 Z = 1319.4

SECTION NAME: 80W

DDH-METRES

ELEVATION ABOVE S.L.

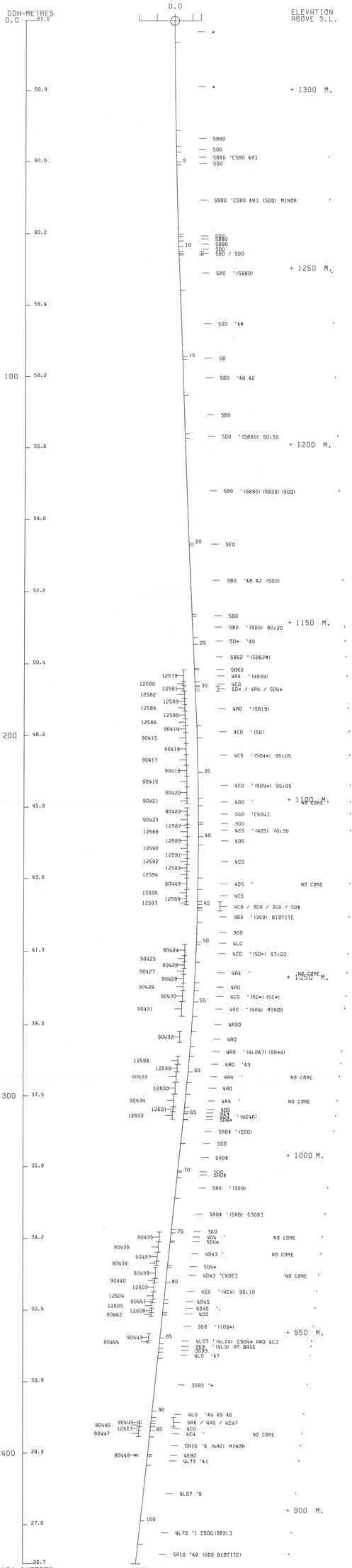

CYPRUS ANVIL MINING CORPORATION
PROGRAM DH162 29 JAN 1985 1:37 PM

DDH: FAGA085 -- 42 DEGREE PROFILE

(VIEW AZIMUTH = 312 DEGREES)

ELEV:1308 592120E : 905155N

PLUNGE ANGLE IS 11.0 TREND ANGLE IS 312.0

CORRECTED COLLAR POSITION: X = 495.7 Z = 1319.4

SECTION NAME: 80W

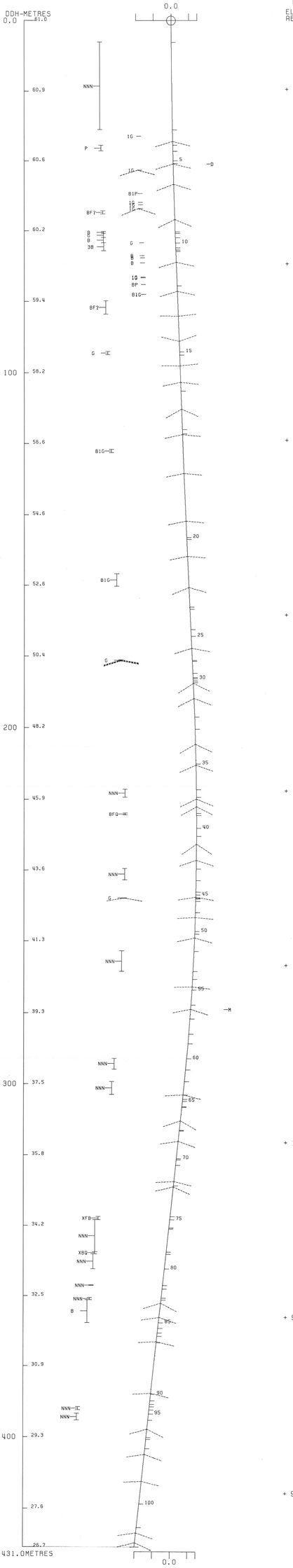

CYPRUS ANVIL MINING CORPORATION
PROGRAM DH161 30 JAN 1985 9:12 AM

DDH: FAGA079 -- 42 DEGREE PROFILE

(VIEW AZIMUTH = 312 DEGREES)

ELEV:1302 592283E : 905252N

PLUNGE ANGLE IS 11.0 TREND ANGLE IS 312.0

CORRECTED COLLAR POSITION: X = 676.8 Z = 1302.7

SECTION NAME: 80W

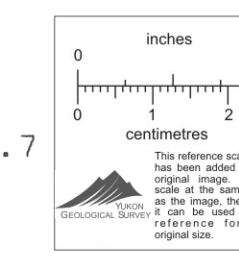

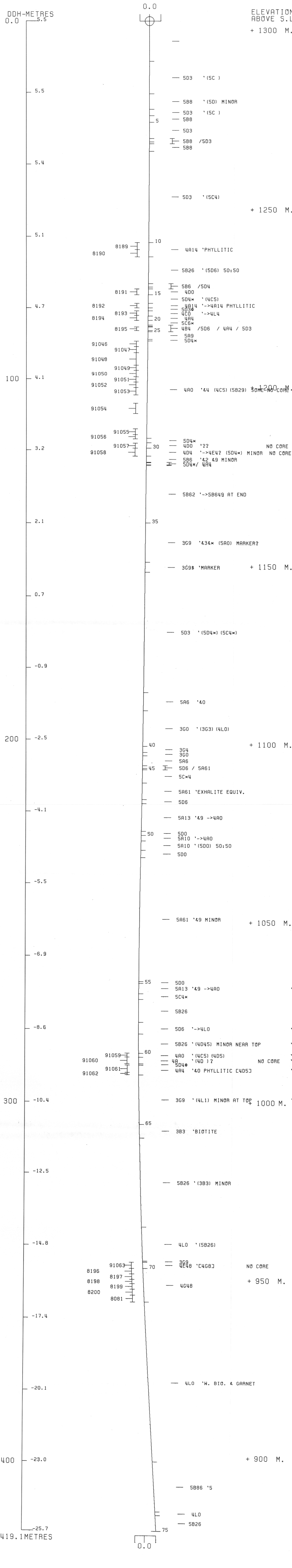

CYPRUS ANVIL MINING CORPORATION
PROGRAM DH162 29 JAN 1985 1:13 PM

DDH: FAGA079 -- 42 DEGREE PROFILE

(VIEW AZIMUTH = 312 DEGREES)

ELEV:1302 592283E ; 905252N

PLUNGE ANGLE IS 11.0 TREND ANGLE IS 312.0

CORRECTED COLLAR POSITION: X = 676.8 Z = 1302.7

SECTION NAME: 80W

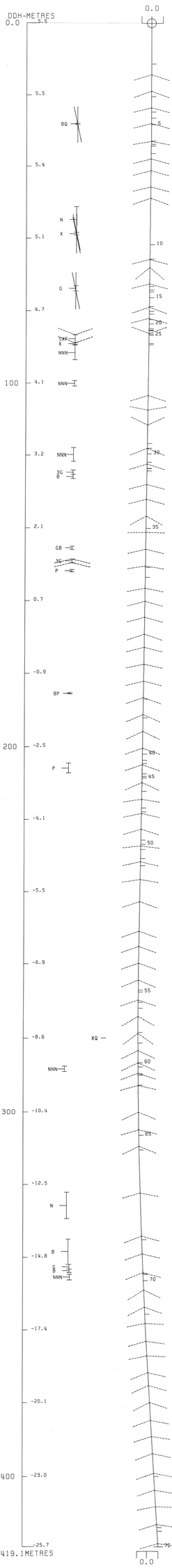

CYPRUS ANVIL MINING CORPORATION
PROGRAM GM16: 30 JAN 1985 9:07 AM

DDH: FAGA076 -- 42 DEGREE PROFILE

(VIEW AZIMUTH = 312 DEGREES)

ELEV: 1302 592247E ; 905204N

PLUNGE ANGLE IS 11.0 TREND ANGLE IS 312.0

CORRECTED COLLAR POSITION: X = 616.9 Z = 1301.8

SECTION NAME: 80W

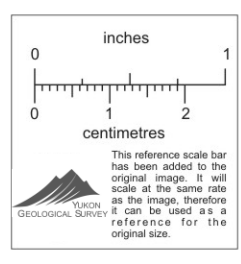

DDH-METRES

ELEVATION ABOVE S.L.

0.0 0.1 -0.1 -0.4 -1.0 -2.2 -3.9 -6.1 -8.8 -11.9 -15.0 -17.1 -18.2 -18.8 -19.9 -21.6 -23.9 -26.2 -28.5 -30.9 -33.3 -34.2

100 200 300 400

407.1 METRES

0.0 5 10 15 20 25 30 35 40 45 50 55 60 65 70 75 80 85 90 0.0

+ 1300 M.

+ 1250 M.

+ 1200 M.

+ 1150 M.

+ 1100 M.

+ 1050 M.

+ 1000 M.

+ 950 M.

+ 900 M.

	5B0 5D3	
	5B2	
	5D3	
	5B2	
	5B0	
	5D3 'C5D0(4B80)]	'
	5B80 '(5B8$)	'
8288	5B2$/5D6 / 4D0 / 5C4*	
8289	4C0	
	5B6$	
	5B8$	
	5D4$	
	5B80/ 5B8$	
	5B0 '(5D0 &$) (10Q0)	'
	5D0	
	5B80 '(5B0)	'
	5D0 '(5B)	'
	5B2$	
91029	4G48	
91030	4E4 '	NO CORE '
91031	4A4 '	NO CORE '
8290	5C4*	
8291	4A4	
8292	5D4$	
	3G9 '(5D4$)	'
	5D4$	
	5A0 '&$	'
	3G0 '&9	'
	5A31 '9	'
	3G0 '&9	'
	5D4@	
	3G0	
	3G9 '&0	'
8293	4L0	
	4D4* '(4L3)	'
	3G0 '&9	'
	5B2$ '(5A$&9)	'
8294	4A4	
	5B2$ '(5A$)	'
8295	3G9 '&0	'
	4A4	
	3G0 '&9	'
8296	4A01/ 4L0	
8297	4A04	
	5B26	
91032	4A4 / 5A9	
91033	4D34 '	NO CORE '
	5B26	
	4L2	
8298	4G4	
	3G0 '(10Q0) (5D4$)	'
	4L27	
	3G9	
	5C4$	
	4A0	
	5C4$	
	5A9	
	5C4$	
	4A0 '->5A19	'
91034	4D43/ 4A10/ 5A1 / 5C4	
91035	5A6 '(4L) (4A)	'
91036	4D43/ 4L0	
	4D14	
	3G0	
	4L0 '(10Q0) (4B42) MINOR	'
	3G0	
	4L0	
91037	4E46/ 4L0 / 4E46/ 4L0 / 4A4	
8299	4G08	
91038	4G80	
91039	4EG '	NO CORE '
91040	4C3	
91041	4G08	
91042	4C3	
91043	4G80 '	NO CORE '
91044		
91045		
	4L27	
	5B6	

CYPRUS ANVIL MINING CORPORATION
PROGRAM DH162 29 JAN 1985 1:11 PM

DDH: FAGA076 -- 42 DEGREE PROFILE

(VIEW AZIMUTH = 312 DEGREES)

ELEV:1302 592247E : 905204N

PLUNGE ANGLE IS 11.0 TREND ANGLE IS 312.0

CORRECTED COLLAR POSITION: X = 616.9 Z = 1301.8

SECTION NAME: 80W

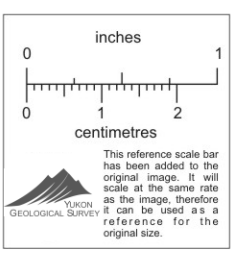

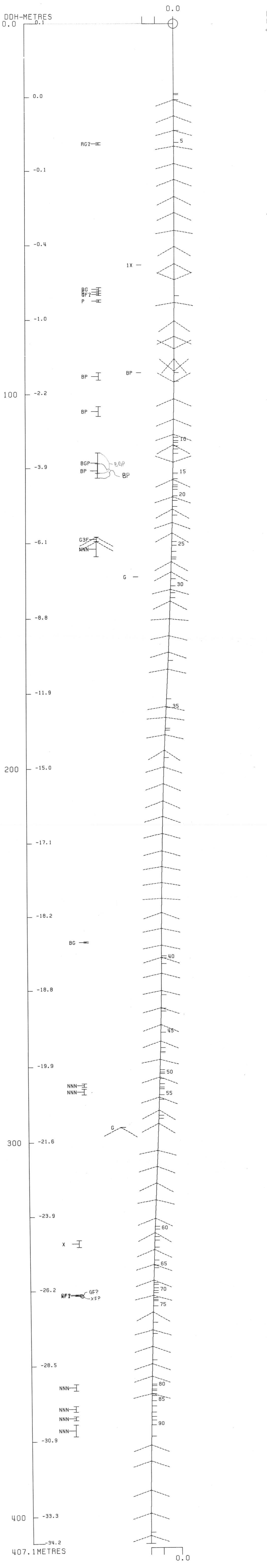

DDH: FAGA069 -- 42 DEGREE PROFILE

(VIEW AZIMUTH = 312 DEGREES)

ELEV:1303 592206E ; 905159N

PLUNGE ANGLE IS 11.0 TREND ANGLE IS 312.0

CORRECTED COLLAR POSITION: X = 556.3 Z = 1302.6

SECTION NAME: 80W

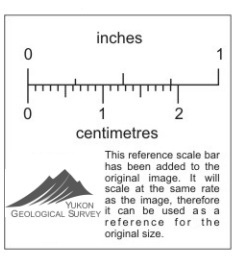

DDH-METRES

ELEVATION ABOVE S.L.

0.0 0.4 — 0.2 — -0.5 — -1.6 — -3.2 — 100 -5.3 — -7.8 — -10.5 — -12.9 — -15.2 — 200 -17.2 — -19.0 — -20.5 — -21.9 — -23.3 — 300 -24.6 — -26.0 — -27.3 — -28.6 — -29.9 — 400 -31.2 — -31.8

410.3METRES

0.0

+ 1300 M.

5B8 '(5DO) MINOR

5DO

+ 1250 M.

5B8

5DO

5

+ 1200 M.

5B8

5B0

10

5B8

5B0

5D4×

5B0

5B21 '&9

15

4D4 '(4E4?) NO CORE

4C3

4A30 ' NO CORE IN PART

5C4

4A4 '&3 &0

20

+ 1150 M.

4LO

4A10 'PHYLLITIC (3G2)

4L4 '[4CO?]

4DO? ' NO CORE

25

4L24

4A10 'PHYLLITIC &3 &9 (4DO)

5C4×

4A1 'PHYLLITIC &4

4LO

30

5B6 '&9

+ 1100 M.

4A4 ' NO CORE

4D45 '(4A3) (4C*) 70:30:TRACE

4KO '&4 (5D4)

35

4LO

4AD4 ' NO CORE

40

5A19/ 4AO / 5A19/ 4A4?

5A19

5B6 '(4D4) MINOR

5A19 '(4AO) (4D4) BOTH MINOR

4L64

45

4D4?

4A1 '&3&4 (4LO)

5B64 '(10QO)

4A14 'PHYLLITIC (3G2)

5B61

50

5B46

4A10 'PHYLLITIC

5B46

3GO '(5D4× -> 5D6)

+ 1050 M.

5DO '(5D6) (5B86[3G8]) 33:33:33 & BIO'

3GO '&9(10QO) (5DO) 80:15:05 STRINGER'

55

4L

3GO '(10QO) 60:40 STR.

4L '&1&2&4&7&6 STR.

3GO '&9 (10Q$) 95:05 STR. & SPECK

60

10QO '&$ (5D4×) (4LO) 60:20:20

3GO '(5D4$) (10QO&$) 90:05:05 SPECK

3B3

3GO '&9 (3B$) 90:10

+ 1000 M.

65

4L2 / 4A10

4G4# '(5D4×) TRACE

70

4E4 / 4G4#/ 4E4 / 4G4#

4E4# '(4G4)

4E4 ' NO CORE

4A1 '&3&4

4A10

75

4L2

3GO '&9 (10Q$)

4L2 '&1(5D4$)4L AFT 5D IN PT,BEIGE●'

4CO '[4L12 &4] (10Q$) (5D4×)

4AO '(4CO)

4LO '&1&2 (10Q&$) 90:10

80

3GO '&9&4

+ 950 M.

4L2 '&1&4 (3G4) (5D4×) 50:40:10

4LH

3GO '&9&4&6

85

4L2

3G9 '&6

4L2 '&1 (3G4) 50:50

5C#

4LO '&2 &6 AFTER 3G STR. & 5D

5C$ '.

90

4LO '&1 &2 &6 AFTER 3G STR.

5C$ '.

4L24 '&1 STR.

5C$ '.

95

4L24 '.

+ 900 M.

5C$ '.

4L2 '&1 &6

100

5C$ / 4L2 / 5C$

4L2 '&6 &1

5C$

4L2 ' &6 &1 AS ABOVE AD NAUSEUM

5C$

4L2 '&6 &1

105

5C$ / 4L2 / 4L2

8359 8360 8361 8362 8363 8364 8365 8366 8367 8368 8369 8370 8371 8372 8373 8374 8375 8376 8377 8378 8379 8380 8381 8382 8383 8384 8385 8386 8387 8388 8389 8390 8391 8392 8393 8394 8395 8396 8397 8398 8399 8400 7951 7952 7953 7954 7955 7973 7956 7957 7958 7959 7960 7961 7962 7963 7964 7965 7966 7967 7968 7969 7970 7971 7972

91022 91023 91024 91025 91026 91027 91028 91066 90266 90267 90268

CYPRUS ANVIL MINING CORPORATION
PROGRAM DH162 29 JAN 1985 1:09 PM

DDH: FAGA069 -- 42 DEGREE PROFILE

(VIEW AZIMUTH = 312 DEGREES)

ELEV:1303 592206E : 905159N

PLUNGE ANGLE IS 11.0 TREND ANGLE IS 312.0

CORRECTED COLLAR POSITION: X = 556.3 Z = 1302.6

SECTION NAME: 80W

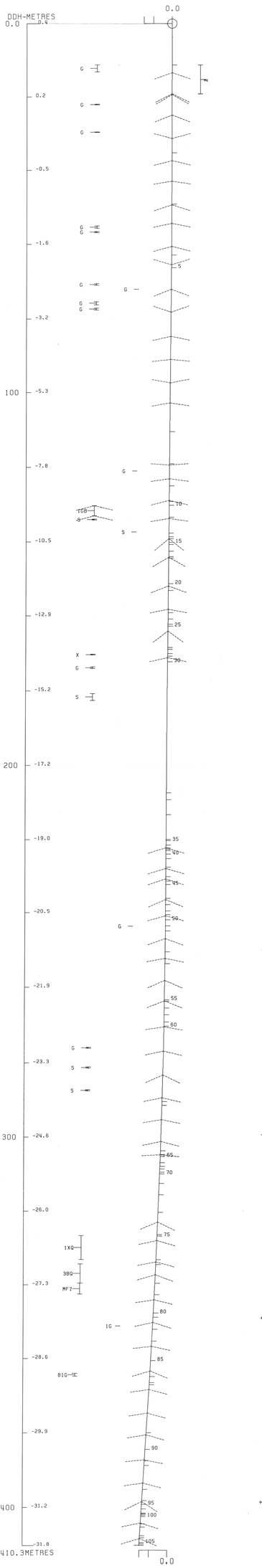

CYPRUS ANVIL MINING CORPORATION
PROGRAM DH161 30 JAN 1985 9:02 AM