015179

CYPRUS ANVIL MINING CORPORATION Page 1 of _____

DIAMOND DRILL CORE LOG Date: _____

Hole Number: P54V019

Reference Fabric Orientation Diagram:

Project: Vangorda Plateau Remap

Location: Vangorda Plateau

Claim: _____

Terr.Plane Co-ords.: 6903303.8 N

Conversion of K-A metric co-ords

593686.2 E

Grid Co-ords: _____

Elevation: 1113.5 metres K-A elev. -10.61 metres

All symmetry determinations looking

Total Depth: 461.0 feet = 140.5 metres NW with 52 dipping

Inclination: -90° _____ with dip azimuth _____.

Purpose: test for lateral extent of mineralization

Reason hole Terminated: _____

Logged by: GAJ/LCP Date(s) Logged: Aug 13/1984

Drilling Contractor: _____

CORE Size	From	To
CASING	0	58 ft
AX	58	461 ft

Collar Cased and Capped: _____

Hole Cemented: _____

Steel down hole: _____

Started: April 21/1954 Completed: April 27/1954

Cyprus Anvil Mining Corp. Page 2 of _____

DDH P-54-V-01-9 (2 / 8)

Diamond Drill Core Log Date: _____ Logged By: _____

Code	Drillhole	Elevation	Northing	Easting	Units (feet/metres)	R.F.E.	
1	2 8	10 16	17 24	25 32	34 39	41 42	
T	P54V019	1111.5	9103103.18	5936862		52	

Code	Drillhole	Depth	Zenith Angle	True Azimuth	Comments
1	2 8	10 14	22 26	28 32	34 56
R	P54V019	00	180.0	0.0	AT COLLAR
R			.	.	
R			.	.	
R			.	.	
R			.	.	
R			.	.	
R			.	.	
R			.	.	
R			.	.	
R			.	.	
R			.	.	
R			.	.	
R			.	.	
R			.	.	
R			.	.	
R			.	.	
R			.	.	
R			.	.	
R			.	.	
R			.	.	
R			.	.	
R			.	.	
R			.	.	
R			.	.	
R			.	.	
R			.	.	
R			.	.	
R			.	.	

Code	Drillhole	Comments, Errant Remarks, Snivellings and / or Lewd Suggestions
1	2 8	10 56
		NO DOWNHOLE SURVEYS
		RECOVERY OVERALL 54.5 %

C.A.M.C. 1981 - E-2

Feet

DDH P54V019

Cyprus Anvil Mining Corp.
Lithologic Log

Page 3 of

Date: Aug 13/84 Logged By: GAJ/LCP

Code	From	To	Recov.	No.	Unit	Description
L	0 0	43 0		1	#	Overburden
L	43 0	58 0		2	#	Approx 7' in core box of granite blders & phyllite pebbles
L	58 0	150 0		3	5B20	(5A1 ± 3) 90:10
						Med dk grey to med grey to dk grey, variably calc, mod lithoned to PS2
						fltd, mod soft to mod hrd phyllite interbanded w/ dk grey to blk,
						PS2 fltd, variably calc phyllite. Latter unit as 3 approx. 1 m
						thick interbands scattered thru — locally calc enough to approach
						carbonaceous marble. S2 folia largely dk med grey, locally black
						in the darker lithology. Softer, variably calc phyllite are 30% calc &
						locally are greenish tinged — also contain minor biotite. Unit ends in
						1 m (2') long quartz vein. Phyllites have minor diss py + po. Intact
L	150 0	315 0		4	5A6	±1 borderline (5D0 ± 4) Minor
						Mod hrd, dk grey to blk, generally PS2 fltd, largely noncalc, carbonaceous
						phyllite. Contains good microlithon texture involving lighter & darker
						qtzose laminae separated by dk grey to blk, softer, more micaceous
						S2 folia. Qtz-sulphide banding not well developed but is a
						minor feature — Sulphide mainly po both as diss flecks/streaks along
						S2 and in qtz bands. Total sulphides 1-2%. Minor py present.
						Around 228.5 — small qtz-pyrite band has been split. Texturally
						4E1 — 1½-2cm or less qtz-sulphide bands — approaches 4A for 1 ft
						Contains minor interbanded, greenish beige, gen calc. PS2 fltd to lithoned,
						chlorite-muscovite phyllite. Occurs as bands on scales less 1cm to about
						8" thick — volcanic derived. Predominant occurrences in int
						270-381 (3 larger bands) V minor calc interbanding 167'-168'

Small minor 5D4 band at 122'
Also minor sphal
Short chloritic sections
lighter grey phyllite possible alt. of darker grey phyllite

Unit relatively intact

C.A.M.C. 1981 - E - 3A

DDH P54V019

Cyprus Anvil Mining Corp.
Lithologic Log

Date: Aug 13/84 Logged By: GAS/LCP

Code	From	To	Recov.	No.	Unit	Description
L	3115 0	3310 0		5	5E21	(5B20) (5A16) 50:30:20
						Dk grey to med dk grey to locally blk, mod hrd to hrd, var. calc, generally PS2 fltd, locally lithoned phyllite interb w/ dk grey PS2 fltd calcite, carb, marble Marble itself has interbands, dk grey to black, v fine grained, v hard, possible metachert Unit 50% marble Diss py + po in qtzose bands No convincing 4A texture Relatively intact Not v convincing Vangorda lithologies Unit similar to phyllites in Unit # 3 (except where marble w/ black interbands – which is minor occurrence in the upper unit)
L	3310 0	3412 0		6	5A16	→ (5B62) uphole
						Dk grey to blk, mod hrd to hrd, PS2 fltd, to microlithoned, noncalc phyll. Harder & dker as go down DDH Upper contact last appearance of subst marble – otherwise similar Rel intact
L	3412 0	3680		7	5A16	No CORE
						probably the same as the underlying unit
L	3680	4610		8	5A16	(5A3) minor (5D0 ±4) minor
						Dk grey to blk, mod hrd to hrd, gen. noncalc, PS2 fltd to microlithoned, carbonaceous, sil. phyllite. V Minor interbanded calc phyllite – esp 423'–425' but overall quite noncalc Contains minor po and lesser py diss along S2 & cross-cutting fractures, & qtzose bands along S2 Qtzose bands not well developed Similar to Unit # 4 Numerous small 5D0 ±4 bands Rel intact w/ some core missing from boxes.

C.A.M.C. 1981 – E – 3A

EOH = 461.0 ft

DDH P54.V.01.9

Cyprus Anvil Mining Corp.

Lithologic Log

Date: Aug 13/84 Logged By: GAS/LLP

Code	From	To	Recov.	No.	Unit	Description
1	10 14	16 20	22 24	26 28	30 34	35
						Summary
						DDH starts in variably calc phyllites which can't be placed in strat interbedded w/ dk grey marbles
						Passes into grey noncalc, silic, carb. phyllites w/ tuff bands. Looks reasonable for basal Vangorda. Contains some interbanded dk marble
						Most reasonable prob. is basal Vangorda carbonaceous phyllite

C.A.M.C. 1981 - E - 3A

DDH P54V019 (2–8) **Cyprus Anvil Mining Corp.** Page 6 of

Structural Log Date: Aug 13/84 Logged By: GAJ

Code (1)	From (10–14)	To (16–20)	Feature (22–24)	Sym (26)	S_0 Dip Direct. (28–32)	S_1 Dip Direct. (34–38)	S_2 Dip Direct (40–44)	Description
S			PS2				60	top of DDH 105?
S		1130	CS2				60	→ PS2 L2 030° low pt S2 + crem. at 045°
S		1270	CS2	D			56	→ PS2 lineation L2
								is down dip
S		1400	PS2				60	
S		1720	CS2				75	→ PS2
								L2 is ~090° to low pt of S2
S		2001	PS2				74	→ CS2
S		2470	PS2				84	
S		2750	PS2				69	
S		2900	PS2				70	→ CS2
S		3170	PS2				72	
S		3380	PS2				78	
S		4160	PS2				65	
S		4520	PS2				70	
S		4580	PS2				65	
								EOH = 461.0 feet

Feet

FAULT

DDH P5HV019 (2 / 8) Cyprus Anvil Mining Corp.

Page 7 of _____

REC Structural Log Date: Aug 29/84 Logged By: LCP

Code	From	To	Feature	Sym	S_0 Dip / Direct. (UPPER)	S_1 Dip / Direct. (INT)	S_2 Dip / Direct (LOWER)	Description
	10 14	16 20	22 24	26	28 32	34 38	40 44	
F	15180	11058	P1	2				13'/47' recovery — from original log
F	13412	13618	NIVIV					No core box — no core lost in shuffle of core / companies / etc.

C.A.M.C. 1981 - E - 4

DIAMOND DRILL RECORD, HOLE NO. 19

PROPERTY VANGORDA

SHEET NUMBER 1 | SECTION FROM 0.0 TO 150.0 | STARTED April 21, 1954

LATITUDE 29,721.16 9059.01 | DATUM 4000 | COMPLETED April 27, 1954

DEPARTURE 29,352.91 8946.77 | BEARING | ULTIMATE DEPTH 461.0

ELEVATION 3,945.94 +259 1261.67 | DIP Vertical hole | PROPOSED DEPTH to test for lateral extent of mineralization

DEPTH FEET	CORE RECOV	DESCRIPTION	CORE SAMPLE NO.	FOOTAGE	CORE ASSAYS AG.	CU.	PB.	ZN.	SLUDGE SAMPLE NO.	FOOTAGE	SLUDGE ASSAYS AG.	CU.	PB.	ZN.
(1144' 0.0-58.0		Overburden (casing). From 43.0 to 58.0, granite boulders and fragments of graphitic schist were drilled. Actual bedrock starts at 58.0.												
58.0-105.0	13.0	Graphitic schist containing about 40% interbanded grey silica. Several small quartz stringers. Shearing 50° to core.												
105.0-115.0	10.0	Dark grey sericite schist. A few short interbanded graphitic sections.												
115.0-129.7	14.7	Graphitic schist. Several short sections of interbanded sericitic material.												
129.7-150.0	18.0	Medium grey sericite schist. Some fine laminations of graphitic material. Shearing contorted in part but averaging 50° to core. Quartz from 147.5 to 149.7												
150.0-232.0	65.0	Graphitic schist. About 30% grey interbanded silica. Shearing at 60° to 70° to core. A few small patches and threads of pyrrhotite.												
232.0-342.0	75.0	Graphitic schist similar to the above section. Considerable interbanded silica. Shearing at 60° to core. Sparse pyrite and pyrrhotite.												
342.0-372.0	22.2	Graphitic schist with varying amounts of grey interbanded silica. Shearing at 80° to core.												

DIAMOND DRILL RECORD, HOLE NO. 19

PROPERTY VANGORDA

SHEET NUMBER 2 SECTION FROM ___ TO ___ STARTED ___

LATITUDE ___ DATUM ___ COMPLETED ___

DEPARTURE ___ BEARING ___ ULTIMATE DEPTH ___

ELEVATION ___ DIP ___ PROPOSED DEPTH ___

DEPTH FEET	CORE RECOV	DESCRIPTION	CORE SAMPLE NO.	FOOTAGE	CORE ASSAYS AG.	CU.	PB.	ZN.	SLUDGE SAMPLE NO.	FOOTAGE	SLUDGE ASSAYS AG.	CU.	PB.	ZN.
372.0-374.0	2.0	Light grey, silicified sericite schist.												
374.0-461.0		Graphitic schist with varying amounts of interbanded silica. Shearing at 80° to core. Sparse pyrrhotite.												
		End of hole at 461.0												
		Recovery: 54.5%												
		Size of core: A-X (1 3/16")												

CYPRUS ANVIL MINING CORPORATION Page 1 of _____

DIAMOND DRILL CORE LOG Date: _____

Hole Number: P54V022 Reference Fabric Orientation Diagram:

Project: Vangorda Plateau remap

Location: _____

Claim: _____

Terr.Plane Co-ords.: 6903317.917 N } conversion of PA coordinates
593795.8628 E }

Grid Co-ords: _____

Elevation: 1129.976m. (4000.08ft [PA]) conv. of P.A. elevations All symmetry determinations looking

Total Depth: 342 feet = 104.2m NW with 52 dipping

Inclination: -90° SW with dip azimuth _____.

Purpose: To cross-section mineralization

Reason hole Terminated: _____

Logged by: LCP / GAS Date(s) Logged: August 1984

Drilling Contractor: _____

	CORE Size	From	To	Collar Cased and Capped:
	AX	96 ft	342 ft	
Hole Cemented:				
Steel down hole:				

Started: April 29/54 Completed: May 4/54

Cyprus Anvil Mining Corp. Page 2 of _____

DDH P54V022 (2 8)

Diamond Drill Core Log Date: _____ Logged By: _____

Code	Drillhole	Elevation	Northing	Easting	Units (feet/metres)	R.F.E.	
	2 8	10 16	17 24	25 32	34 39	41 42	
T	P54V022	11130.0	9033171.9	5937955.9		52	

Code	Drillhole	Depth	Zenith Angle	True Azimuth	Comments
	2 8	10 14	22 26	28 32	34 56
R	P54V022	00	180.0	010.0	AT COLLAR
R			.	.	
R			.	.	
R			.	.	
R			.	.	
R			.	.	
R			.	.	
R			.	.	
R			.	.	
R			.	.	
R			.	.	
R			.	.	
R			.	.	
R			.	.	
R			.	.	
R			.	.	
R			.	.	
R			.	.	
R			.	.	
R			.	.	
R			.	.	
R			.	.	
R			.	.	
R			.	.	
R			.	.	
R			.	.	
R			.	.	
R			.	.	
R			.	.	
R			.	.	

Code	Drillhole	Comments, Errant Remarks, Snivellings and / or Lewd Suggestions
1	2 8	10 56

C.A.M.C. 1981 - E-2

DDH V22

Cyprus Anvil Mining Corp.
Lithologic Log

Date: _____ Logged By: LCP/GJ

Code	From	To	Recov.	No.	Unit	Description
L	00	90		1	#	overburden
L	90	174		2	3G9	±0 med grey to m. dk grey to dk grey, soft, generally non calc PS_2 fol phyllite Weath brick red along S_2 folia and x cutting fractures below 167' with minor thin calcareous bands 1- few mm thick Minor qtz-rose lithons developed locally Very poor recovery 77' in 20' of core box all v. broken & rubbly
L	174	184		3	3F9	dk grey hard PS_2 foliated thinly to thickly laminated finely x/n calcite mbl. Some light colored "beaded" lamine laminated in shades of grey ll S_2 intact to mod bkn
L	184	253		4	3G9	±0 ±3 generally med grey to dk grey mod soft to mod hard PS_2 foliated bt locally lithoned generally non calc Phyllite with interbands of well lithoned lighter colored calc phyllite (thinly to medium interbanded) Calc bands have qtz, aqua green mineral and locally perhaps biotite Lower contact gradational and marks consistently dk grey color as opposed to interbanded m grey & dk grey. Unit is roughly 30% calcareous and 60% is dark grey-color interbanding independent of calcite content and also thinly to medium interbanded, 2cm SDO at EOI could fit into 3F9/3G9 pkg described in Mt Myra fairly well.

DDH V22

Cyprus Anvil Mining Corp.
Lithologic Log

Date: _____ Logged By: _____

Code	From	To	Recov.	No.	Unit	Description
	10 14	16 20	22 24	26 28	30 34	35
L	253	278		5	BG9	±3 minor
						mod hard, dk grey to black non calc PS_2 foliated phyllite with lesser thin interbands that are moderately calcareous
						Locally microlithoned.
						Calc bands ~ 5% of unit and generally less than 10% of unit
						254'-260' heavily bxtd silicified (ie hard) probably a minor fault - qtz filled fractures at 10° CA
L	278	310		6	BE1.6	V. minor
						mod hard to hard, PS_2 fol dk grey to black silic carb phyllite.
						Minor po lesser py as irregular porphs and streaks // S_2 locally assoc with qtz rose bands.
						290' = thin (2cm) BB3 bgnd
						Lower contact gradational over ~2' and marked by increase in amount of dissem po.
L	310	342		7	BE1.6	
						as above except with more rusty weathering spots reflecting the presence of pyrrhotite ~2-5% po. - Does not in general show a good AA type texture much is just po without associated qtz.
						342' = end of core - may not be end of hole.

DDH V22 (2 – 8)

Cyprus Anvil Mining Corp.

Structural Log

Date: _____ Logged By: LCP

Code	From	To	Feature	Sym	S_0 Dip Direct.	S_1 Dip Direct.	S_2 Dip Direct	Description
1	10 – 14	16 – 20	22 – 24	26	28 – 32	34 – 38	40 – 44	
		105	PS2				44	
		134	PS2				51	
		166	PS2				40	
		178	PS2	D			45	→ CS_2
		188	CS2				63	L_2 at 130 from S_2 low point
		198	PS2				55	
		208	PS2	D			78	→ CS_2
		226	PS2				69	→ CS_2
		245	CS2				65	L_2 ~90° from low point
		262	PS2				83	
		280	PS2				70	
		295	PS2				77	CS_N 48/090
		314	PS2				74	CS_N 30/090
		341	PS2				87	L_N is 10° counterclockwise from low point

CYPRUS ANVIL MINING CORPORATION Page 1 of _____

DIAMOND DRILL CORE LOG Date: _____

Hole Number: P54V023

Reference Fabric Orientation Diagram:

Project: Vangorda Plateau remap

Location: Vangorda Plateau

Claim: _____

Terr.Plane Co-ords.: 6903170.1 N

Conversion of KA metric grid coords

593721.4 E

Grid Co-ords: _____

KA elev. -10.61 m.

Elevation: 1136.8 m.

All symmetry determinations looking

Total Depth: 335.0 feet 102.1 metres _____ with _____ dipping

Inclination: -90° _____ with dip azimuth _____.

Purpose: test for mineralization

Reason hole Terminated: _____

Logged by: GAJ/LCP

Date(s) Logged: August 12/1984

Drilling Contractor: _____

Size	CORE From	To
CASING	0.0	114.0
AX	114	335

Collar Cased and Capped: _____

Hole Cemented: _____

Steel down hole: _____

Started: May 4/1954 Completed: May 10/1954

Cyprus Anvil Mining Corp. Page 2 of _____

DDH P54V023 (2–8)

Diamond Drill Core Log Date: _____ Logged By: _____

Code	Drillhole	Elevation	Northing	Easting	Units (feet/metres)	R.F.E.	
	2 8	10 16	17 24	25 32	34 39	41 42	
T	P54V023	1136.8	9031710.1	593721.4		52	

Code	Drillhole	Depth	Zenith Angle	True Azimuth	Comments
	2 8	10 14	22 26	28 32	34 56
R	P54V023	000	180.0	000.0	AT COLLAR
R					
R					
R					
R					
R					
R					
R					
R					
R					
R					
R					
R					
R					
R					
R					
R					
R					
R					
R					
R					
R					
R					
R					

Code	Drillhole	Comments, Errant Remarks, Snivellings and / or Lewd Suggestions
	2 8	10 56
		NO DOWNHOLE SURVEYS
		OVERALL RECOVERY 57.4 %

C.A.M.C. 1981 – E-2

DDH P54V0023

Cyprus Anvil Mining Corp.

Lithologic Log

Date: Aug 12/84 Logged By: GAJ/CCP

Code	From	To	Recov.	No.	Unit	Description
	10 14	16 20	22 24	26 28	30 34	35
L	100	11140		1	#1	0/8
L	11140	12130		2	5A6	±1 [3G9 ±1]
						Mod. hrd to locally hrd & locally mod soft, dk grey to black, noncalc, PS2 f+d phyllite. Contains minor thin qtz-po or py bands, minor diss streaks po or py along S2. No good qtz-sulphide banding. Core badly broken - recovery INC - but probably pretty bad in top ½ of unit. No gouge recovered
L	12130	12170		3	3G9 3	±0±1 (3F9) 90:10
						Dk grey to locally blk, generally PS2 f+d, variably calc phyll interlayered w/ minor med dk grey to dk grey, finely x/line calcite marble. Core ranges mod soft to mod. hrd to locally hrd. Mod interbanded noncalc phyll, calc phyllite, marble, hrd siliceous phyllite interbanded. Sil. phyll is calc. Local lithons to micro lithons are commonly calcareous - consist of qtz-calc-minor po & py. Po & py as thin streaks // S2 and in thin laminae of qtz-po-py parallel S2. (mm scale)
						10% marble, 40% noncalc phyll, 40% calc phyll. Bottom of last good marble. First good marble 1 ft below TOI. Minor green mineral in calc lithons. One po porphyroblast.
						* Possible candidate for 3F9 package.
						V. broken to relatively intact. Recovery obviously less than perfect
L						
L	12170	12172		4	3G9 3	
						Mod. soft, dk grey, PS2 f+d to lichened calc phyllite. Similar to calc sections of last unit. Green mineral in calcareous lithons.

DDH P54.V.023
2 8

Cyprus Anvil Mining Corp.
Lithologic Log

Page 4 of _____

Date: Aug 12/84 Logged By: GAJ/CCP

Code	From	To	Recov.	No.	Unit	Description
	10 14	16 20	22 24	26 28	30 34	35
L	12720	13013		15	13691	No Core probably same as Units #4 and #6
L	13013	13300		16	13691	± 3 Dk grey, locally black, generally PS2 fld, locally lithonel, mod soft, gen. noncalc phyll. interlayered w/ short sections of lithonel, dk grey, calc phyllite. Calc phyllite has green mineral in lithons - also po. Calc phyllite about 20% of unit. One thin (1cm) 3B band at 322' in noncalc. phyllite. Contains minor po & py diss as thin streaks along S2 & thin ptygg sulphide laminae parallel S2. Short sections have a few % sulphides due to conc. of ptygg bands. - these sections are not particularly hard.
L	13300	13315		17	15A161	Hole may end in 3' of hard, dk grey to black, noncalc, carbonaceous, siliceous phyllite w/ minor po. Assuming DDH ends around 335'.
						Summary: Too dk grey for normal phyllite Contains short sections of dk grey marble Not good Vangorda Best correlation is carbonaceous Mt. Mye marble section Not good 5A169. No qtz-sulphides banding EOH = 335 feet

C.A.M.C. 1981 - E - 3A

DDH P54V023 (2 8) Cyprus Anvil Mining Corp. Page 5 of _____

Structural Log Date: Aug 12/84 Logged By: GAS/LCP

Code	From	To	Feature	Sym	S_0 Dip Direct.	S_1 Dip Direct.	S_2 Dip Direct	Description
1	10 14	16 20	22 24	26	28 32	34 38	40 44	
S			P S2				45	near top of DDH
S			P S2				65	½ first box
S		11950	P S2				60	
S		12150	P S2				65	CSn 20/000
S		12460	P S2				50	
S		12590	P S2				43	
S		12700	P S2				50	
S		13050	P S2				47	
S		13210	P S2				45	
								EOH

Feet

FAULT

DDH P54V023 (2 8) Cyprus Anvil Mining Corp.

Structural Log

Date: Aug 29/84 Logged By: LCP

Code	From	To	Feature	Sym	S_0 Dip Direct. (UPPER)	S_1 Dip Direct. (INT)	S_2 Dip Direct (LOWER)	Description
1	10 14	16 20	22 24	26	28 32	34 38	40 44	
F	1 1 1 4 0	1 2 3 1 3 0	3 1 B P	4				core badly broken, recovery poor
								recovery about 40%
F	1 2 3 1 3 0	1 2 7 1 0 0	2 1 B P					core very broken to relatively intact / recovery less than perfect
F	1 2 7 1 2 0	1 3 0 1 3 0	N W W					No core - box lost in "shuffle"

C.A.M.C. 1981 - E - 4

DIAMOND DRILL RECORD,

HOLE NO. 23

PROPERTY VANGORDA CREEK, Y. T.

SHEET NUMBER 1 | SECTION FROM ____ TO ____ | STARTED May 4, 1954

LATITUDE 29,279.15 8324.28 | DATUM 4000 | COMPLETED May 10, 1954

DEPARTURE 29,456.19 8978.25 | BEARING ____ | ULTIMATE DEPTH 335.0

ELEVATION 4,022.56 +259 1305.02 | DIP Vertical hole | PROPOSED DEPTH To test for mineralization

DEPTH FEET	CORE RECOV	DESCRIPTION	CORE SAMPLE NO.	FOOTAGE	CORE ASSAYS AG.	CU.	PB.	ZN.	SLUDGE SAMPLE NO.	FOOTAGE	SLUDGE ASSAYS AG.	CU.	PB.	ZN.
0.0- 34.7 114.0		Casing (overburden)												
114.0- 254.0	57.8	Graphitic schist. Some interbanded grey silica at 60° to core, changing to 50° to core toward end of section. Sparse pyrite and pyrrhotite.												
254.0- 335.0	69.0	Graphitic schist containing slightly more interbanded silica than previous section. Several irregular patches of white quartz. Sparse pyrite and pyrrhotite.												
		Shearing at 45° to core.												
		End of hole at 335.0												
		Recovery: 57.4%												
		Size of core: A X (1 3/16")												
		R. W. Baker												

CYPRUS ANVIL MINING CORPORATION Page 1 of ____

DIAMOND DRILL CORE LOG Date: ____

Hole Number: P54V024

Reference Fabric Orientation Diagram:

Project: Vangorda Plateau remap

Location: Vangorda Plateau

Claim: ____

Terr.Plane Co-ords.: 6903164.8 N

(conversion of KA metric co-ords)

593606.2 E

Grid Co-ords: ____

Elevation: 1123.1 metres (KA metric elev -10.61m.)

All symmetry determinations looking

Total Depth: 351.0 feet = 107.0 metres ____ with ____ dipping

Inclination: -90° ____ with dip azimuth ____.

Purpose: to cross-section mineralization

Reason hole Terminated: ____

Logged by: LCP/GAM Date(s) Logged: ____

Drilling Contractor: ____

	Size	CORE From	To
	CASING	0.0	131.0
	EX	131.0	351.0

Collar Cased and Capped: ____

Hole Cemented: ____

Steel down hole: ____

Started: May 6/1984 Completed: May 13/1954

Cyprus Anvil Mining Corp. Page 2 of _____

DDH P54V024 (2–8)

Diamond Drill Core Log Date: _____ Logged By: _____

Code	Drillhole	Elevation	Northing	Easting	Units (feet/metres)	R.F.E.	
	2 8	10 16	17 24	25 32	34 39	41 42	
T	P54V024	11123.1	9031641.8	5936061.2		52	

Code	Drillhole	Depth	Zenith Angle	True Azimuth	Comments
	2 8	10 14	22 26	28 32	34 56
R	P54V024	00	180.0	0.0	AT COLLAR
R		.	.	.	
R		.	.	.	
R		.	.	.

Feet

DDH P54V024

Cyprus Anvil Mining Corp.

Lithologic Log

Date: _____ Logged By: LCP/GAJ

Code	From	To	Recov.	No.	Unit	Description
	10 14	16 20	22 24	26 28	30 34	35
L	00	1310		1	#	Overburden check original log for depth (<135')
L	1310	3225		2	SA1,6	9 v. minor
						dk grey to black mod hard to hard (only locally mod soft)
						PS2 fol moncale carbonace silic phyllite
						Minor PO assoc with thin qtz bands // S2 locally resembling
						4A texture but very minor
						Minor 2-5 cm SD6 bands
						recovery very bad but indeterminate due to lack of
						footage blocks (2 x 7 row boxes) From 220' down the
						4A type qtz S= banding is more strongly developed
L	3225	3250		3	SD0	
						generally homogenous with minor qtz calcite bands/veins
						mod olive green slightly calc - minor interbanded mdk
						grey phyllite - a few larger (3cm thick) qtz calc veins
L	3250	3430		4	SA1,6	
						same as #2 only v. v. minor qtz S= banding and
						some thin SD bands 2-3 cm
L	3430	3500		5	SA1,6	±3 v. minor
						similar to #4 with v.v. minor calcite bearing interbands
						and calcite in Xcutting fracts << 1% calcite
L	3500	3510		6	BF9	
						dk grey to black PS2 fol mod soft to hard finely X'ln calcite
						marble small bandins of black hard silicate - chert?

C.A.M.C. 1981 - E - 3A

EOH = 351.0

DDH P54V024 (2 8)

Cyprus Anvil Mining Corp.

Structural Log

Page 4 of ____

Date: ____ Logged By: LCP

Code (1)	From (10–14)	To (16–20)	Feature (22–24)	Sym (26)	S_0 Dip (28–32)	S_0 Direct.	S_1 Dip (34–38)	S_1 Direct.	S_2 Dip (40–44)	S_2 Direct	Description
S			PS2						31		wer top ~138'?
S		2050	PS2						30		
S		221	PS2						46		
S		252	PS2						32		
S		284	PS2						57		
S		302	CS2						49		L2 "horizontal"
S		319	CS2						70		L2 " @090°
S		335	PS2						57		
S		345	PS2						41		
S		350	PS2						40		
											EOH

DIAMOND DRILL RECORD, HOLE NO. 24

PROPERTY VANGORDA CREEK, Y. T.

SHEET NUMBER 1 SECTION FROM 0.0 TO 351.0 End STARTED May 6, 1954

LATITUDE 29,272.37 DATUM 4000 COMPLETED May 13, 1954

DEPARTURE 29,077.72 BEARING ULTIMATE DEPTH 351.0

ELEVATION 3,977.52 DIP Vertical hole PROPOSED DEPTH To cross-section mineralization

DEPTH FEET	CORE RECOV	DESCRIPTION	CORE SAMPLE NO.	FOOTAGE	CORE ASSAYS AG.	CU.	PB.	ZN.	SLUDGE SAMPLE NO.	FOOTAGE	SLUDGE ASSAYS AG.	CU.	PB.	ZN.
0.0-131.0	(1)	Casing (overburden)												
131.0-322.5	107.5	Graphitic schist containing some interbanded grey silica. Shearing at 30° to 40° to core. Sparse pyrite and pyrrhotite.												
322.5-325.0	2.5	Sericite schist, pale greenish-grey. Shearing at 50° to core. One small patch of quartz at 324.0.												
325.0-351.0	22.0	Graphitic schist with about 40% interbanded silica. Shearing at 70° to core; partially contorted from 345.0 to 349.0.												
		End of hole at 351.0												
		Recovery: 60%												
		Size of core: E X (7/8")												
		R. W. Baker												

Feet

DDH P54V051 Cyprus Anvil Mining Corp

Page 6 of

Logged by

ASSAY LOG (SAMPLER'S COPY)

Date

Sampled by Prospectors Airways

CODE	FROM	TO	SAMPLE	INTR.	REC (m)	UNIT	DESCRIPTION
1	10 14	16 20	22 26	28 30	32 34	36 40	42
P	270	285		15	15	4E8	
P	285	335		50	30	4E8	
P	335	385		50	30	4E8	
P	385	450		65	30	4E8	
P	450	510		60	21	4E8	

DIAMOND DRILL RECORD,

PROPERTY VANGORDA CREEK, Y. T.

HOLE NO. 51

SHEET NUMBER 2

SECTION FROM 76.0 TO 295.0

LATITUDE

DATUM

STARTED

DEPARTURE

BEARING

COMPLETED

ELEVATION

DIP

ULTIMATE DEPTH

PROPOSED DEPTH

DEPTH FEET	CORE RECOV	DESCRIPTION	CORE SAMPLE NO.	FOOTAGE	CORE ASSAYS AG.	CU.	PB.	ZN.	SLUDGE SAMPLE NO.	FOOTAGE	SLUDGE ASSAYS AG.	CU.	PB.	ZN.
76.0-86.0	0	No core. Rock washed out as sludge. Soft alteration material indicated.												
86.0-101.0	1.5	Brittle fragments of graphitic schist. Very black with no interbanded silica. Shearing at 0° to 10° to core.												
101.0-135.0	17.0	Dark grey talcose sericite schist containing a little interbanded graphitic material. Shearing at 50° to core.												
135.0-151.0	4.5	Dark grey talcose sericite schist. Shearing at 50° to core.												
151.0-295.0	43.5	Graphitic schist. Shearing at 70° to 80° to core. Brittle carbonaceous, with very little interbanded silica. Sparse pyrite.												
		End of hole at 295.0 Recovery for hole: 30.7% Recovery in mineralization 52.5% Size of core: A X (1 3/16")												
		Please note: The sludges, other than 188 to 193 inclusive which were sent for assay, do not show any sulphide mineralization worthy of assay. Sparse pyrite grains occur in the sections from 75 to 80 and from 85 to 90.												
		R. W. Baker												

DDH P54V051 (2 / 8) Cyprus Anvil Mining Corp. Page 5 of _____

Structural Log Date: _____ Logged By: _____

Code	From	To	Feature	Sym	S_0 Dip Direct.	S_1 Dip Direct.	S_2 Dip Direct	Description
1	10 14	16 20	22 24	26	28 32	34 38	40 44	
F	1510	1616.0	3 R I P	1				pebbles & rubble / recovery 2.9/15 feet
F	1616.0	1710	N I P					No recovery
F	1710	1716.0	P 1	0				recovery 0.3/5 feet
F	1716.0	1816.0	N I P 1					no recovery
F	1816.0	11010	P 1	1				brittle fragments, recovery 1.5/15 feet
F	11010	13150	P 1	5				recovery 17/34 feet
F	13150	21950	3 B I T	3				very broken to poker chippy recovery 48/160 feet

C.A.M.C. 1981 - E - 4

DDH P54V051 (2 / 8)

Cyprus Anvil Mining Corp.

Structural Log

Page 4 of _____

Date: _____ Logged By: LCP

Code	From	To	Feature	Sym	S_0 Dip Direct.	S_1 Dip Direct.	S_2 Dip Direct	Description
1	10 14	16 20	22 24	26	28 32	34 38	40 44	
S			P S2				70	S = banding near top
S		115	P S2				65	
S		124	P S2				70	
S		139	P S2				55	
S		170	A S2				80	
S		188	P S2				83	
S		216	P S2				67	
S		254	P S2				85	
S		275	P S2				84	
S		284	P S2				75	
								EOH

CYPRUS ANVIL MINING CORPORATION Page 1 of ____

DIAMOND DRILL CORE LOG Date: ____

Hole Number: P54V051

Reference Fabric Orientation Diagram:

Project: Vangorda Plateau Remap

Location: ____

Claim: ____

Terr.Plane Co-ords.: 6902848.72 N

Conversion of KA metric coords

594101.3605 E

Grid Co-ords: ____

Elevation: 1145.1825 metres KA elev - 10.61 m.

All symmetry determinations looking

Total Depth: 295.0 feet = 89.9 metres ____ with ____ dipping

Inclination: -90° ____ with dip azimuth ____.

Purpose: To test magnetic anomaly

Reason hole Terminated: ____

Logged by: LCP / GAJ Date(s) Logged: 1984

Drilling Contractor: ____

	Size	CORE From	To
	CASING	0.0	27.0
	AX	27.0	295.0

Collar Cased and Capped: ____

Hole Cemented: ____

Steel down hole: ____

Started: July 24/1954 Completed: July 27/1954

Cyprus Anvil Mining Corp. Page 2 of _____

DDH P54V051 (2–8)

Diamond Drill Core Log Date: _____ Logged By: _____

Code	Drillhole	Elevation	Northing	Easting	Units (feet/metres)	R.F.E.	
	2 8	10 16	17 24	25 32	34 39	41 42	
T	P54V051	1145.2	9028487.5	594101.4		52	

Code	Drillhole	Depth	Zenith Angle	True Azimuth	Comments
	2 8	10 14	22 26	28 32	34 56
R	P54V051	00	180.0	000.0	AT COLLAR
R			.	.	
R			.	.	
R			.	.	
R			.	.	
R			.	.	
R			.	.	
R			.	.	
R			.	.	
R			.	.	
R			.	.	
R			.	.	
R			.	.	
R			.	.	
R			.	.	
R			.	.	
R			.	.	
R			.	.	
R			.	.	
R			.	.	
R			.	.	
R			.	.	
R			.	.	
R			.	.	
R			.	.	
R			.	.	

Code	Drillhole	Comments, Errant Remarks, Snivellings and / or Lewd Suggestions
	2 8	10 56
		NO DOWNHOLE SURVEYS
		OVERALL RECOVERY 30.7 %
		RECOVERY IN ORE 52.5 %

C.A.M.C. 1981 – E-2

Feet

DDH P54V051 (2–8)

Cyprus Anvil Mining Corp.
Lithologic Log

Page 3 of ____

Date: ____ Logged By: LCP/GAJ

Code	From	To	Recov.	No.	Unit	Description
1	10–14	16–20	22–24	26–28	30–34	35
	00	270		1	#	overburden. check PA log for depth
	270	1510		2	4E8	
						well developed streaks of mt defining thin banding/
						lamination – mt also as larger lenses/clasts one
						to 3cm across.
						relatively intact –
						low grade.
						lower contact against pebbles & rubble.
L	1010	1350		6	3G0	(3B34) minor
						mod soft to soft, m grey, PS_2 fol, non calc, phyllite –
						contains thin orange brown weathering lamine along
						S_2 – upper portion contains thin soft calc greenish
						cremo chl musc phy bands 2→10cm thick.
						S_2 fol'n steely grey
						lower contact small fault.
L	1350	2950		7	5A61	
						non calc, PS_2 fol., dk grey to black generally mod hard
						to locally hard and locally mod soft.
						minor pyrite as dissem grains and in qtz py
						bands ∥ S_2 also locally in X cutting fractures.
						1 2cm calcareous band but largely non calc.
						Core v broken to poker chippy – recovery poor.
						no good SD bands no good qtz 5= bands

insert next page here from original log.

C.A.M.C. 1981 – E – 3A

295 = EOH

DDH P.54.V.0.51.L
2 8

Cyprus Anvil Mining Corp.
Lithologic Log

Date: Aug 28/84 Logged By: LCP

Code	From	To	Recov.	No.	Unit	Description
1	10 14	16 20	22 24	26 28	30 34	35
						Filled in from original log (1954) by Prospector's Airways
L	510	660		3	360	(369) Dark grey sericite schist fragments with a little interbanded graphitic schist Shearing 30° to core recovery 2.9 feet
L	660	860		4	*	5A61 ? NO CORE No recovery, remnants and fragments of graphitic schist
L	860	1010		5	*	5A61 ? NO CORE Brittle fragments of graphitic schist Very black with no interbanded silica Shearing at 10°-0° to core

DIAMOND DRILL RECORD,

(18 E) HOLE NO. 51

PROPERTY VANGORDA CREEK, Y. T.

SHEET NUMBER 1 | SECTION FROM 0.0 TO 76.0 | STARTED July 24, 1954

LATITUDE 28,190.44 8592.4461 | DATUM 4000 | COMPLETED July 27, 1954

DEPARTURE 30,673.93 9349.4139 | BEARING | ULTIMATE DEPTH 295.0

ELEVATION 4,049.97 1155.7925 | DIP Vertical hole | PROPOSED DEPTH To test magnetic anomaly

DEPTH FEET	CORE RECOV	DESCRIPTION	CORE SAMPLE NO.	FOOTAGE	CORE ASSAYS AG.	CU.	PB.	ZN.	SLUDGE SAMPLE NO.	FOOTAGE	SLUDGE ASSAYS AG.	CU.	PB.	ZN.
0.0-27.0	(4.2')	Casing (overburden)												
27.0-28.5	1.5	Casing core (BX) at bedrock. Massive pyrite with vestigial banding at 60° to core. Some magnetite and a little sphalerite - galena following the banding planes. Magnetite partly in attenuated patches.	183	1.5			2.53	2.42		27-51	24'		1.92	1.12
28.5-33.5	3.0	Same mineralization as in previous section. Some reddish-brown sphalerite bands in minor amount. Magnetite in irregular patches as well as following the banding.	184	5.0			3.03	1.71	188	30-35			.57	1.51
33.5-38.5	3.0	Same as previous section. Magnetite has an "augen" appearance in the banding. (in part).	185	5.0			.69	1.11	189	35-40			.17	.15
38.5-45.0	3.0	Banded pyrite at 45° to core containing some magnetite and sparse galena and sphalerite. Sample taken over 6.5 to block at 45.0, due to low core recovery.	186	6.5			2.17	.50	190	40-45			.86	1.61
45.0-51.0	2.1	Fragments of mineralization similar to above. Sample taken over 6.0 due to low core recovery.	187	6.0			1.62	1.01	191	45-50			1.20	1.21
51.0-66.0	2.9	Dark grey sericite schist fragments showing a little interbanded graphitic schist. Shearing at 80° to core.							192	50-55			.19	.15
66.0-71.0	0	No recovery.							193	55-60			.23	.10
71.0-76.0	0.3	Quartz-carbonate fragments containing remnants of graphitic schist. Appears to be a zone [illegible] of alteration too soft to core.												

CYPRUS ANVIL MINING CORPORATION

Page 1 of _____

DIAMOND DRILL CORE LOG

Date: _____

Hole Number: P54V059

Reference Fabric Orientation Diagram:

Project: Vangorda Plateau rcmap

Location: _____

Claim: _____

Terr.Plane Co-ords.: 6902962.08 N

594745.3847 E

} conversions of PA coordinates

Grid Co-ords: _____

Elevation: 1177.5949 m conversion of PA survey

All symmetry determinations looking

Total Depth: 461.0 feet = 140.5m

_____ with _____ dipping

Inclination: -90°

_____ with dip azimuth _____.

Purpose: to test magnetic anomaly

Reason hole Terminated: _____

Logged by: LCP/GAI

Date(s) Logged: August 1984

Drilling Contractor: _____

CORE Size	From ft	To	Collar Cased and Capped: _____
AX	23.0	255	
EX	255	461	

Hole Cemented: _____

Steel down hole: _____

Started: Aug 8/54 Completed: Aug 13/54

Cyprus Anvil Mining Corp. Page 2 of _____

DDH P54V0059 (2–8)

Diamond Drill Core Log Date: _____ Logged By: _____

Code	Drillhole	Elevation	Northing	Easting	Units (feet/metres)	R.F.E.	
1	2 8	10 16	17 24	25 32	34 39	41 42	
T	P54V0059	11177.6	9102962.1	5914745.4		52	

Code	Drillhole	Depth	Zenith Angle	True Azimuth	Comments
1	2 8	10 14	22 26	28 32	34 56
R	P54V0059	100	180.0	270.0	AT COLLAR
R			.	.	
R			.	.	
R			.	.

DDH V59

Feet 2 8

Cyprus Anvil Mining Corp.

Lithologic Log

Date: _____ Logged By: LCP/GAJ

Code	From	To	Recov.	No.	Unit	Description
	10 14	16 20	22 24	26 28	30 34	35
L	0 0	30 0		1	#	overburden
L	30 0	41 0		2	4L07	9 minor
						Mod soft PS_2 foliated locally hard pale cream non calc
						phyllite - Strongly altered now mainly musc + qtz -
						S_2 Folia are off white with v. faint greenish tint
						Contains irregular stringers / veinlets of pyrrhotite &
						minor cpy. . Weath rusty red brn along fractures
						& S_2 Folia
						Lower contact drilled away - core rubbly & redrilled in part.
L	41 0	86 0		3	364	minor → (4LO) 80:20
						Med soft med grey PS_2 fol non calc phyllite thin red weath
						S_2 Folia - S_2 folia are silvery grey fresh. Contains thickly
						interbanded 4LO as unit #2
						Core is v. broken to rubbly
						drillers make no core around 76' v poor recvy ± 20' from there
L	86 0	170 0		4	4L027	
						Similar to #2, pyrite and minor arsenopyrite in addition
						to po. at 125' is 10 cm of po + qtz
						126-170 = much rubble & redrilled core only ≈ 9' recvd.
L	170	250		5	4L6	weak.
						Mod soft to mod hard non calc PS_2 foliated light greenish
						chl musc phyllite locally with thin discontinuous streaks of
						po along S_2 - S_2 folia are pale greenish white - differes
						from #4 since much less sulphide and distinct green
						tinge on S_2 and cut surface
						Recovery v. bad.

DDH V59 (2–8)

Cyprus Anvil Mining Corp.
Lithologic Log

Date: Aug 84 Logged By: LCP GAJ

	Code	From	To	Recov.	No.	Unit	Description
	1	10–14	16–20	22–24	26–28	30–34	35
?To	L	250	3350		6	4L6	[3G48]
							mod soft, locally hard, PS_2 fol med green chloritic phyllite,
							S_2 folia are silvery greenish grey tinge - minor thin
							streaks of PO along S_2 folia and small pink
							garnets locally - core changes size near top of unit
							Grey coloration on S_2 folia ⇒ originally metasedimentary
							protolith
							Homogenous nature & non calc nature implies 3G
							parent.
							At Dy this would be 4L6
?To	L	3350	390			4L06	weak [4L0]
							mod soft to soft PS_2 foliated pale greenish creme non
							calc phyllite - S_2 folia have pale slight greenish tinge
							indicating musc >> chl - Thin streaks of po
							along S_2 locally assoc with qtzose bands & lenses.
							Locally weath red along S_2 & fractures.
							Upper contact gradational lower drilled away in
							rubble.
							not as green as #6
	L	390	461			3G9	
							m dk grey, PS_2 fol, non calc, mod soft, homogenous
							phyllite - Poor recvy

DDH V59 (2–8)

Feet

Cyprus Anvil Mining Corp.

Structural Log

Date: _____ Logged By: LCP

Code	From	To	Feature	Sym	S_0 Dip Direct.	S_1 Dip Direct.	S_2 Dip Direct	Description
1	10–14	16–20	22–24	26	28–32	34–38	40–44	
S		145.0	PSR				65	
S		151.0	PS2				63	
S		171.0	PS2				75	
S		191.0	PS2				60	
S		1115.0	PS2				57	
S		1125	PS2				60	
S		1140	PS2				75	
S		1170	PS2				69	
S		1182	PS2				50	
S		207	PS2				68	
S		2510	PS2				50	
S		2916	PS2				65	CS_N 20/280
S		301	PS2				57	
S		316	PS2				59	
S		3192	PS2				49	
S		4150	PS2				56	

DIAMOND DRILL RECORD,

HOLE NO. 59

PROPERTY Vangorda Creek Y.T.

#59

SHEET NUMBER 1 | SECTION FROM 00 TO 3400 | STARTED August 8, 1954

LATITUDE 28,504.34 | DATUM 4000 | COMPLETED August 13, 1954

DEPARTURE 32,797.33 | BEARING | ULTIMATE DEPTH 4610

ELEVATION 4,156.31 | DIP Vertical hole | PROPOSED DEPTH To test magnetic anomaly north east of previous drilling.

DEPTH FEET	CORE RECOV	DESCRIPTION	CORE SAMPLE NO.	FOOTAGE	CORE ASSAYS AG.	CU.	PB.	ZN.	SLUDGE SAMPLE NO.	FOOTAGE	SLUDGE ASSAYS AG.	CU.	PB.	ZN.
0.0		Casing (Overburden)												
23.0														
23.0 - 255.0	120.6	Light gray to medium gray sericite schist. Shearing at 40° to core. Talcose in part. Sparse pyrrhotite from 36.0 to 39.0; scattered patches of pyrrhotite from 125.0 to 130.0. A few patches of white quartz; some chlorite in association with the quartz. Please note: Due to casing conditions, reduction to E core was made at 255.0												
255.0 - 3400	34.5	Medium grey sericite schist. Fissile. Shearing at 50° to core. Sparse interbanded pyrrhotite.												

DIAMOND DRILL RECORD,

HOLE NO. 59

PROPERTY Vangorda Creek

SHEET NUMBER 2 | SECTION FROM 3400 TO 4610 | STARTED

LATITUDE | DATUM End | COMPLETED

DEPARTURE | BEARING | ULTIMATE DEPTH

ELEVATION | DIP | PROPOSED DEPTH

DEPTH FEET	CORE RECOV	DESCRIPTION	CORE SAMPLE NO.	FOOTAGE	CORE ASSAYS AG.	CU.	PB.	ZN.	SLUDGE SAMPLE NO.	SLUDGE FOOTAGE	SLUDGE ASSAYS AG.	CU.	PB.	ZN.
340.0 - 350.0	1.1	Light grey sericite schist. Several threads of reddish-brown sphalerite. Due to low recovery over this section, only sludges sent for assay.							359	340-345			nil	nil
									360	345-350			nil	nil
350.0 - 381.0	9.3	Greyish white sericite schist. Sheared at 50° to core. Sparse interbanded pyrrhotite.												
381.0 - 412.0	5.2	Graphitic schist containing a little finely interbanded silica. Sheared at 50° to core												
412.0 - 461.0	11.0	Medium grey to dark grey sericite schist. A little interbanded graphitic material. Sheared at 50° to core.												
		End of hole at 4610												
		Average recovery for the hole: 24.1%												
		Size of core: AX (1 3/16") to 255.0 and EX (7/8") to bottom at 461.0. Bad caving took place at 130' from bottom of hole.												

CYPRUS ANVIL MINING CORPORATION Page 1 of _____

DIAMOND DRILL CORE LOG Date: _____

Hole Number: P54V076

Reference Fabric Orientation Diagram:

Project: Vangorda Plateau remap

Location: _____

Claim: _____

Terr.Plane Co-ords.: 6902287.927 N

(conversion of KA metric coords)

595559.2505 E

Grid Co-ords: _____

Elevation: 1145.4141 metres (KA elev - 10.61 m.)

All symmetry determinations looking

Total Depth: 366.0 feet = 111.6 metres _____ with _____ dipping

Inclination: -90° _____ with dip azimuth _____.

Purpose: to test magnetic anomaly

Reason hole Terminated: _____

Logged by: GAJ/LCP Date(s) Logged: August 13/1954

Drilling Contractor: _____

	Size	CORE From	To
	Casing	0.0	20.0 feet
	AX	20.0	366.0 feet

Collar Cased and Capped: _____

Hole Cemented: _____

Steel down hole: _____

Started: Sept 8/1954 Completed: Sept 11/1954

Cyprus Anvil Mining Corp. Page 2 of _____

DDH P54V0076 (2 8)

Diamond Drill Core Log Date: _____ Logged By: _____

Code	Drillhole	Elevation	Northing	Easting	Units (feet/metres)	R.F.E.	
	1 2 8	10 16	17 24	25 32	34 39	41 42	
T	P54V0076	11145.49	02287.9	59555591.3		52	

Code	Drillhole	Depth	Zenith Angle	True Azimuth	Comments
	1 2 8	10 14	22 26	28 32	34 56
R	P54V0076	00	180.0	0.0	AT COLLAR
R		.	.	.	
R		.	.	.	
R		.	.	.

DDH P.S.H.V.07.6 (2 / 8)

Cyprus Anvil Mining Corp.
Lithologic Log

Date: Aug 13/84 Logged By: GAJ/ccc

Code	From	To	Recov.	No.	Unit	Description
1	10 14	16 20	22 24	26 28	30 34	35
L	100	200		1	1#	o/B
L	200	2150			1*	No core & no core boxes
L	2150	2511				1 box - mostly empty
						* rows 1 & 2 2 pieces of IDF - qtz - feldspar - hornblende - biotite subhedral qtz phenocrysts up to 2mm across, subhedral feldspar - locally strongly embayed. Altered hbl & bio (Uessen) set in fine-grained cream to light beige matrix. Also much rubble of same rock — probably not a jumper.
						* rows 3-5 largely fine rubble of grey phyllite chips w/ few pieces of core — dk med grey to greenish grey to beige fault rock. S2 filled phyllite pieces in fine-grained rock flour matrix. Much S2 disrupted film. Develops characteristic wavy, lenticular film. Like T1E fault — but poorly preserved. Some possible S_D4 as well. Recovery terrible because 215-251 in same box.
L	2511	3142		10	3G01	
						1 box full of jumbled pieces of med grey, PS2 filled, lustrous, noncalc, med. soft to med hard phyllite. A few small qtz vein probably originally // S2. Again recovery is very dreadful.
	3142	3161.6		11	3G01	NO CORE from original log presumed 360 EDH

change to 250.0

SEE Sheets 3A & 3B

change to 250.0

DDH P54.V.07.6 (2 / 8)

Cyprus Anvil Mining Corp.

Lithologic Log

Page 3A of _____

Date: _____ Logged By: _____

Code	From	To	Recov.	No.	Unit	Description
1	10 14	16 20	22 24	26 28	30 34	35
						Filled in from original prospector's airways log
L	1210	1312.5		2	5IC	NO CORE medium grained gabbro with minor magnetite 19.7-20.5 section of aphanitic dark green rock
L	1312.5	1410.3		3	3IG	[5B] NO CORE medium grey sericite schist, hard and brittle showing 80° to core some fragments of gabbro
L	1410.3	1550		4	5IC	(3G [5B]) NO CORE marginal phase of gabbro showing partial assimilation of the schist
L	1550	1010		5	5IC	NO CORE dense, medium-grained gabbro
L	1010	1110		6	5IC 3I	NO CORE medium green, carbonatized section in gabbro fissile and mudded from 101-102
L	1110	1260		7	5IC	NO CORE medium grained gabbro
L	1260	2300		8	10IF	MOSTLY NO CORE porphyry / intercalated brownish grey aphanitic rock 128-133

C.A.M.C. 1981 - E - 3A

DDH P.5.4.V.0.7.6 (2 / 8)

Cyprus Anvil Mining Corp.

Lithologic Log

Date: Aug 28/89 Logged By: _____

Code	From	To	Recov.	No.	Unit	Description
1	10 14	16 20	22 24	26 28	30 34	35
L	2310	2500		9	36	BXA SOME NO CORE
						like TIE fault rock, poorly preserved. 240-250
						may be SD4

DDH 2 V.0.7.6 8 Cyprus Anvil Mining Corp. Page 4 of _____

Structural Log Date: Aug 13/84 Logged By: GAS

Code	From	To	Feature	Sym	S_0 Dip Direct.	S_1 Dip Direct.	S_2 Dip Direct	Description
1	10 14	16 20	22 24	26	28 32	34 38	40 44	
		12151 0	PS12				415	
		12151 5	PS12				810	
		13412 0	PS12				710	
								Most of rest of box is PS2 at 50°-80° average dip is 70°
								EOH

C.A.M.C. 1981 - E - 4

Feet!

FAULT

DDH P54V076 (2–8)

Cyprus Anvil Mining Corp.
Structural Log

Page 5 of ____

Date: Aug 28/84 Logged By: LCP

Code (1)	From (10–14)	To (16–20)	Feature (22–24)	Sym (26)	S_0 Dip Direct. (28–32)	S_1 Dip Direct. (34–38)	S_2 Dip Direct (40–44)	Description
F	1200	2150	NNN					no core - boxes missing
F	2300	2500	3FX					fault bxn rock - like
								TIE fault
F	3420	3660	NNN					no core - boxes missing
F	200	3660	P	5				average recovery 54.1%

DIAMOND DRILL RECORD,

HOLE NO. 76

PROPERTY VANGORDA CREEK Y.T.

SHEET NUMBER 2 SECTION FROM 230.0 TO 366.0 STARTED

LATITUDE DATUM End COMPLETED

DEPARTURE BEARING ULTIMATE DEPTH

ELEVATION DIP PROPOSED DEPTH

DEPTH FEET	CORE RECOV	DESCRIPTION	CORE SAMPLE NO.	FOOTAGE	CORE ASSAYS AG.	CU.	PB.	ZN.	SLUDGE SAMPLE NO.	FOOTAGE	SLUDGE ASSAYS AG.	CU.	PB.	Z
230.0-237.0	6.0	Remnants of schist associated with white quartz-carbonate and numerous small carbonate stringers. Sparse pyrite.												
237.0-240.0	1.5	Same as previous section with several threads of reddish-brown sphalerite associated with pyrite.	544	3.0			0.48	0.82						
240.0-290.0	3.5	Fissile, highly carbonatized schist. Small patches of pyrite and white quartz.												
290.0-366.0	36.0	Graphitic schist interbanded with dark grey sericite schist. Fissile and highly buttoned. White quartz from 290.0 to 292.0. Sparse pyrite. Shearing at 80° to 90° to core.												
		End of hole at 366.0												
		Size of core: AX (1-3/16")												
		Average recovery: 54.1%												

DIAMOND DRILL RECORD,

HOLE NO. 76

PROPERTY VANGORDA CREEK Y. T.

SHEET NUMBER 1 | SECTION FROM 0.0 TO 230.0 | STARTED Sept. 8, 1954

LATITUDE 26,218.94 7991.5329 | DATUM 4000 | COMPLETED Sept. 11, 1954

DEPARTURE 35,407.03 10792.063 | BEARING | ULTIMATE DEPTH 366.0

ELEVATION 4,050.73 1156.0241 | DIP Vertical Hole | PROPOSED DEPTH To test magnetic anomaly #24

DEPTH FEET	CORE RECOV	DESCRIPTION	CORE SAMPLE NO.	FOOTAGE	CORE ASSAYS AG.	CU.	PB.	ZN.	SLUDGE SAMPLE NO.	FOOTAGE	SLUDGE ASSAYS AG.	CU.	PB.	ZN.
0.0 - 20.0	(6")	Casing (overburden)												
20.0 - 32.5	12.5	Gabbro, medium grained. Texture non-aphitic. A little magnetite present, as determined by alnico magnet. From 19.7 to 20.5, a section of aphanitic dark green rock, possibly a partially re-constituted portion of wall rock.												
32.5 - 40.3	4.3	Medium gray sericite schist. Hornlets appearance, hard and brittle. Shearing at 60° to core. Some fragments of gabbro present.												
40.3 - 55.0	5.7	Marginal phase of the gabbro showing partial assimilation of the schist. Some well-developed feldspar from 52.0 to 55.0												
55.0 - 101.0	33.4	Dense, medium-grained gabbro. Weakly magnetic.												
101.0 - 111.0	8.0	Medium green, carbonatized section in the gabbro. Original character of rock destroyed. Fissile and mudded from 101.0 to 102.0												
111.0 - 126.0	5.6	Medium grained gabbro. Medium-grained feldspar.												
126.0 - 230.0	70.8	Porphyry. An interealated section of brownish-grey aphanitic rock from 126.0 to 133.0; possibly a remnant of country rock, partically re-constituted. Some large well developed feldspar phenocrysts from 225.0 to 230.0. some anhedral quartz eyes in the ~~creamy grey groundmass.~~												

CYPRUS ANVIL MINING CORPORATION Page 1 of _____

DIAMOND DRILL CORE LOG Date: _____

Hole Number: P54V079

Reference Fabric Orientation Diagram:

Project: Vangorda Plateau remap

Location: _____

Claim: _____

Terr.Plane Co-ords.: 6902955.917 N

Conversion of KA metric co-ords

595306.3276 E

Grid Co-ords: _____

Elevation: 1210.876 metres KA elev - 10.61 m.

All symmetry determinations looking

Total Depth: 571.0 feet = 174.0 metres _____ with _____ dipping

Inclination: -90° _____ with dip azimuth _____.

Purpose: to test magnetic anomaly

Reason hole Terminated: _____

Logged by: LCP/GAS Date(s) Logged: August/1984

Drilling Contractor: _____

CORE Size	From	To	
CASING	0.0	2.0	feet
AX	2.0	571.0	feet

Collar Cased and Capped: _____

Hole Cemented: _____

Steel down hole: _____

Started: Sept 12/1954 Completed: Sept 17/1954

Cyprus Anvil Mining Corp. Page 2 of _____

DDH P.54.V.0.79 (2–8)

Diamond Drill Core Log Date: _____ Logged By: _____

Code	Drillhole	Elevation	Northing	Easting	Units (feet/metres)	R.F.E.	
1	2 8	10 16	17 24	25 32	34 39	41 42	
T	P54V0179	12101.9	9029551.9	5953061.3		512	

Code	Drillhole	Depth	Zenith Angle	True Azimuth	Comments
1	2 8	10 14	22 26	28 32	34 56
R	P54V0179	000	180.0	0.0	AT COLLAR
R					
R					
R					
R					
R					
R					
R					
R					
R					
R					
R					
R					
R					
R					
R					
R					
R					
R					
R					
R					
R					
R					
R					

Code	Drillhole	Comments, Errant Remarks, Snivellings and / or Lewd Suggestions
1	2 8	10 56
		NO DOWNHOLE SURVEYS
		AVERAGE RECOVERY 61.61 %

C.A.M.C. 1981 – E-2

DDH P54V079 (2 Feet 8)

Cyprus Anvil Mining Corp.
Lithologic Log

Page 3 of ____

Date: Aug 84 Logged By: LCP/GAJ

Code	From	To	Recov.	No.	Unit	Description
1	10–14	16–20	22–24	26–28	30–34	35
L	80	20		1	#	Overburden see original PA log
L	20	600		2	3G0	
						m grey ps_2 fol noncalc mod soft to mod hard Phyllite.
						2 pieces of 10F qtz feld porphyry at 56' both ~10cm long
						may not be in place as boxes do contain some obvious
						jumpers
L	60	163			#	mostly no core. - a few pieces of 3G0
L	163	168		6	3G0	
L	168	222		7	#	mostly no core - a few pieces of 3G0
L	222	279		8	#	no core
L	279	325		9	3G0	
						as #2 only about ½ of core remains
L	325	390		8	#	no core
L	390	395		14	3G0	
						med grey soft, noncalc, PS_2 fol. Phyllite
	395	507		15	3E1	AND (3B2) minor
						dk grey to black, PS_2 fol, noncalc mod hard to hard carbonaceous
						siliceous phyllite contains black mottling possibly reflecting
						andalusite porphs. Contains dissem fg po & py in xcutting

see next page

see next page

see next page

not in original log

C.A.M.C. 1981 - E - 3A

fractures. Minor thin olive grey homogenous noncalc chl MUSC phyllite mod soft & v. locally with Leopard rock texture upper contact lost in missing core - lower contact gradational - no faults visible

DDH P54V079 (2 / 8)

Cribbed from Prospectors Airways log

Cyprus Anvil Mining Corp.

Lithologic Log

Page 3A of _____

Date: _____ Logged By: _____

Code	From	To	Recov.	No.	Unit	Description
1	10 14	16 20	22 24	26 28	30 34	35
L	1610	1910		3	3G0	No Core medium grey sericite schist ; same as the overlying unit
L	1910	11150		4	3G9	1? No core graphitic schist; dense, carbonaceous and brittle with very little interbanded silica. Sparse pyrite
L	11150	11630		5	3G0	No core medium grey sericite schist ; same as the underlying unit
L	11680	12120		7	3G0	MOSTLY NO CORE medium grey to dark grey sericite schist
L	12120	12790		8	3G0	NO CORE medium grey to dark grey sericite schist ; same as next unit
L	13150	13420		10	3G0	NO CORE medium grey to dark grey sericite schist
L	13420	13440		11	3G0	±9 No CORE same interbanded graphitic schist from 342-344
L	13440	13520		12	3G0	NO CORE
L	13520	13900		13	3G0	±9 NO CORE dark grey sericite schist interbanded w/ considerable graphitic schist
L	51100	51170		17	3G09	NO CORE same as overlying unit

L 517.0 551.0 18 3G0 NO CORE same as underlying unit

C.A.M.C. 1981 - E - 3A

DDH V.79

Cyprus Anvil Mining Corp.
Lithologic Log

Date: Aug 84 Logged By: LCP GAJ

Code	From	To	Recov.	No.	Unit	Description
	10 14	16 20	22 24	26 28	30 34	35
L	507	510		16	3609	
						mod to med dk grey PS_2 foliated mod soft to mod hard non calc. Phyllite - minor brick red weath along S_2 Folia
L	510	551			#	no core
L	551	571		19	3610	
						mgrey non calc PS_2 Fol mod soft phyllite Microlithoned in detail with steely grey S_2 folia separating soft greenish grey microlithons containing an dissem green mineral perhaps chloride - not the usual gtrose green bands
						571 = EOH

see previous page

C.A.M.C. 1981 - E - 3A

DDH V79 (2–8) Ft

Cyprus Anvil Mining Corp.
Structural Log

Page 5 of ____

Date: ____ Logged By: LCP

Code	From	To	Feature	Sym	S_0 Dip Direct.	S_1 Dip Direct.	S_2 Dip Direct	Description
1	10–14	16–20	22–24	26	28–32	34–38	40–44	
S		55	PS2				65	
S		163	PS2				86	
S		290	PS2				78	
S		301	PS2				70	
S		402	PS2				66	
S		417	PS2				65	
S		423	PS2				80	
S		469	PS2				70	
S		485	PS2				70	
S		500	PS2				80	
S		551	PS2				90	
S		556	PS2				82	

Feet

FAULT

DDH P-54-10-79 (2 / 8)

Cyprus Anvil Mining Corp.

Structural Log

Date: Aug 28/84 Logged By: LCP

Code	From	To	Feature	Sym	S_0 Dip Direct.	S_1 Dip Direct.	S_2 Dip Direct	Description
1	10 14	16 20	22 24	26	28 32	34 38	40 44	
F	11610	11630	NNW					mostly no core
F	11680	12120	NNW					mostly no core
F	12120	12790	NWW					no core — no boxes
F	13150	13100	NNW					no core — no boxes
F	15100	15151	NWW					no core — no boxes

DIAMOND DRILL RECORD, HOLE NO. 7[illegible]

PROPERTY VANGORDA CR[illegible], Y. T.

SHEET NUMBER 1 SECTION FROM 0.0 TO 517.0 STARTED September 12, 1954

LATITUDE 28,433.56 [illegible] DATUM 4,000 COMPLETED September 17, 1954

DEPARTURE 34,637.35 [illegible] BEARING ULTIMATE DEPTH 571.0

ELEVATION 4,265.59 [illegible] DIP Vertical Hole PROPOSED DEPTH To test magnetic anomaly.

DEPTH FEET	CORE RECOV	DESCRIPTION	CORE SAMPLE NO.	FOOTAGE	CORE ASSAYS AG.	CORE ASSAYS CU.	CORE ASSAYS PB.	CORE ASSAYS ZN.	SLUDGE SAMPLE NO.	FOOTAGE	SLUDGE ASSAYS AG.	SLUDGE ASSAYS CU.	SLUDGE ASSAYS PB.	SLUDGE ASSAYS ZN.
0.0-2.0	(0.67)	Casing (overburden)												
2.0 - 91.0	44.5	Medium grey sericite schist. Shearing at 80° to core. The schist is fairly compact and does not break readily on the shear planes.												
91.0 - 115.0	11.4	Graphitic schist. Dense, carbonaceous and brittle with very little interbanded silica. Sparse pyrite.												
115.0 - 211.0	86.5	Medium grey sericite schist. Shearing at 80° to 90° to core. A few small white quartz patches. Some interbanded grey silica, of a quartzitic nature. Sparse pyrrhotite in short threads. The rock is non-magnetic per the alnico magnet. A little biotite present.												
211.0 - 332.0	100.[illegible]	Medium grey to dark grey sericite schist. The schist is not fissile and the sericite development is not as strong as in the main zone at Vangorda Cr. The schist has an argillaceous odour when wet. Shearing at 80° to core. A few small patches of white quartz. Some interbanded graphitic schist from 342.0 to 34[illegible].												
332.0 - 387.0	29.4	Dark grey sericite schist interbanded with considerable graphitic schist, silica and intermittent bands of brown, fine-grained biotite. A few white quartz threads.												
387.0 - 467.0	48.5	Dominantly graphitic schist. Some interbanded silica, fine biotite and chlorite. The rock is almost gneissic rather than schistose. Sparse pyrrhotite, and pyrite in short threads.												
467.0 - 517.0	30.0	Graphitic schist interbanded with some fine granular silica. Sparse pyrite. Shearing at 70° to core. Several short sections of interbanded sericite schist.												

DIAMOND DRILL RECORD, HOLE NO. [illegible]

PROPERTY [illegible], V. T.

SHEET NUMBER 2 SECTION FROM 517.0 TO 57[illegible] STARTED

LATITUDE DATUM COMPLETED

DEPARTURE BEARING ULTIMATE DEPTH

ELEVATION DIP PROPOSED DEPTH

DEPTH FEET	CORE RECOV	DESCRIPTION	CORE SAMPLE NO.	FOOTAGE	CORE ASSAYS AG.	CU.	PB.	ZN.	SLUDGE SAMPLE NO.	FOOTAGE	SLUDGE ASSAYS AG.	CU.	PB.	ZN.
517.0 - 571.0		Medium gray to dark gray sericite schist. Shearing at 60° to core. Several small patches of white quartz.												
		End of hole at 571.0												
		Size of core: Ax (1 3/16")												
		Average recovery: 61.6%												

CYPRUS ANVIL MINING CORPORATION Page 1 of _____

DIAMOND DRILL CORE LOG Date: _____

Hole Number: P55V107

Reference Fabric Orientation Diagram:

Project: Vangorda Plateau remap

Location: _____

Claim: _____

Terr.Plane Co-ords.: 6902639.596 N

conversion of KA metric coords

594317.7713 E

Grid Co-ords: _____

Elevation: 1162.3336 metres KA elev -10.61m.

All symmetry determinations looking

Total Depth: 275.0 feet = 83.8 metres _____ with _____ dipping

Inclination: -90° _____ with dip azimuth _____.

Purpose: to test for extensions of mineralization

Reason hole Terminated: _____

Logged by: GAS/LCP

Date(s) Logged: August 13/1984

Drilling Contractor: _____

CORE Size	From	To	Collar Cased and Capped: _____
Casing	0.0	15.0 feet	
AX	15.0	275.0	

Hole Cemented: _____

Steel down hole: _____

Started: May 23/1955 Completed: May 25/1955

Cyprus Anvil Mining Corp.

Diamond Drill Core Log

DDH P55V107 (2–8)

Date: _____ Logged By: _____

Code	Drillhole	Elevation	Northing	Easting	Units (feet/metres)	R.F.E.	
1	2–8	10–16	17–24	25–32	34–39	41 42	
T	P55V107	1162.3	902639.6	594317.8			

Code	Drillhole	Depth	Zenith Angle	True Azimuth	Comments
1	2–8	10–14	22–26	28–32	34–56
R	P55V107	00	180.0	0.0	AT COLLAR
R			.	.	
R			.	.	
R			.	.	
R			.	.	
R			.	.	
R			.	.	
R			.	.	
R			.	.	
R			.	.	
R			.	.	
R			.	.	
R			.	.	
R			.	.	
R			.	.	
R			.	.	
R			.	.	
R			.	.	
R			.	.	
R			.	.	
R			.	.	
R			.	.	
R			.	.	
R			.	.	

Code	Drillhole	Comments, Errant Remarks, Snivellings and / or Lewd Suggestions
1	2–8	10–56
		NO DOWNHOLE SURVEYS
		AVERAGE RECOVERY 49.2 %

Feet

DDH P55.V.107 (2 / 8)

Cyprus Anvil Mining Corp.
Lithologic Log

Date: Aug 13/84 Logged By: GAJ/CCP

Code	From	To	Recov.	No.	Unit	Description
	10 14	16 20	22 24	26 28	30 34	35
L	0 0	115 0		1	#1	O/B check original log for bedrock - O/B interface
L	115 0	1110 0		2	3G9	Dk grey, mod. hrd, PS2 flkd, homog, nonscale phyllite w/ minor S2 foliaform qtz-chlorite-py-po veins. Two pieces 4HO massive po at 38' - 6" total. Contact ind. Unit v. brkn recovry probably pretty bad. Not dk. enough for SA. Weathered down to 45.0
L	1110 0	1217 0		3	3G93	Dk grey, mod. soft to mod. hrd, PS2 flkd, slightly calc phyllite. About 10% calc bands 1 - few cm thick. Bands largely diss. calc. in dk grey phyllite - locally from microlithons in slightly coarser layers. V. Broken recovry bad.
L	1217 0	1717 0		4	3G	No core no core = no core boxes
L	1717 0	2018 0		5	3G0	Mod. soft, med. grey, PS2 flkd, nonscale phyllite. Quite homogeneous. V. brken - recovry not v. good but better than above units. OB2. flattened po porph in S2
L	2018 0	2019 0		6	BXA	Fault BXa Mod. hrd, calc, dk grey fault breccia. Usual highly irregular flkg w/ lenses of calcite & qtz. Some redrilled core. Recovry IND. (45" core in 25' box) IND. Flkg locally at 25°-60° to Core axis. Difference in S2 across fault - steeper below than above.

change to 211.0

change to 212.5

based on Prospectors Airways log.

DDH P55V107
2 8

Cyprus Anvil Mining Corp.
Lithologic Log

Page 4 of

Date: Aug 13/84 Logged By: GAS/LCP

Code	From	To	Recov.	No.	Unit	Description
1	10 14	16 20	22 24	26 28	30 34	35
L	2090	2510		7	3E1	borderline ±3 minor
						Dk grey to blk, slightly calc, PS2 fltd, mod hrd to locally hrd phyllite.
						Contains minor diss py & po. Some diss euhedral py & py ass
						w irregular qtz bands & lenses. Po in xcutting veinlets. Minor thin
						5D tuff bands interbanded
L	2510	2750		8	3E1	borderline ±3 minor No CORE
						No core boxes – same lithology as Unit #7 from
						original Prospectors Airways log
						EOH = 275.0 feet

C.A.M.C. 1981 – E – 3A

DDH P55V107 (2 8)

Cyprus Anvil Mining Corp.

Structural Log

Page 5 of

Date: Aug 13/84 Logged By: GAJ

Code	From	To	Feature	Sym	S_0 Dip Direct.	S_1 Dip Direct.	S_2 Dip Direct	Description
1	10 14	16 20	22 24	26	28 32	34 38	40 44	
S		600	PS2				65	
S		850	PS2				85	
S		1000	PS2				83	
S		1100	PS2				72	
S		1770	PS2				60	
S		1890	PS2				80	
S		2060	PS2				80	
S		2120	PS2				23	
S		2480	PS2				53	
								EOH

Feet

FAULT

DDH P55.V.10.7 (2 / 8) Cyprus Anvil Mining Corp.

Structural Log Date: Aug 28/84 Logged By: LCP

Code	From	To	Feature	Sym	S_0 (UPPER) Dip Direct.	S_1 (INT) Dip Direct.	S_2 (LOWER) Dip Direct	Description
	10 14	16 20	22 24	26	28 32	34 38	40 44	
F	11150	11450	3BP	2				very broken w/ poor recovery 6.3'/30'
F	11110	11270	3BIP	4				very brkn w/ poor recovery 43.6'/92'
F	11270	11770	NNN					no core - boxes missing
F	11770	12110	3BIP	6				v. brkn w/ poor recovery 49.3'/74'
F	12110	12125	3FIX					fault breccia like TIE Fault rock foliations 25-60° to core axis
F	12150	12750	NNN					no core - boxes missing

DIAMOND DRILL RECORD.

HOLE NO. 107

PROPERTY Vangorda Creek Y.T.

SHEET NUMBER 1 SECTION FROM 0.0 TO 211.0 STARTED May 23, 1955.

LATITUDE 27,404.75 8377.3518 DATUM 4000 COMPLETED May 25, 1955

DEPARTURE 31,365.17 9560.1038 BEARING Vertical hole ULTIMATE DEPTH 275.0

ELEVATION 4,106.24 1172.9436 DIP PROPOSED DEPTH To test location of

DEPTH FEET	CORE RECOV	DESCRIPTION	CORE SAMPLE NO.	FOOTAGE	CORE ASSAYS AG.	CU.	PB.	ZN.	SLUDGE SAMPLE NO.	FOOTAGE	SLUDGE ASSAYS AG.	CU.	PB.	ZN.
0.0- 15.0	(all)	Casing (overburden)												
15.0- 45.0	6.2	Fragments and buttons of weathered dark grey sericite schist. Sparse pyrite. Shearing at 70° to core.												
45.0- 137.0	13.1	Graphitic schist containing a little interbanded dark grey sericite schist. Several patches of barren greyish-white quartz. Massive pyrrhotite from 88.0 to 88.5. Shearing at 80° to core.												
137.0- 211.0	49.5	Dark grey sericite schist Shearing at 70° to core. A few threads of white quartz-carbonate.												

[illegible] DRILL RECORD. [illegible] NO. 107

[illegible] Vangorda Creek Y.T.

SHEET NUMBER 2. SECTION FROM 211.0 TO 275.0 STARTED

LATITUDE DATUM End. COMPLETED

DEPARTURE BEARING ULTIMATE DEPTH

ELEVATION DIP PROPOSED DEPTH

DEPTH FEET	CORE RECOV	DESCRIPTION	CORE SAMPLE NO.	FOOTAGE	CORE ASSAYS AG.	CU.	PB.	ZN.	SLUDGE SAMPLE NO.	FOOTAGE	SLUDGE ASSAYS AG.	CU.	PB.	ZN.
211.0 - 275.0	[illegible]	Graphitic schist containing a little interbanded silica. White carbonatized section from 211.0 to 212.5. Shearing at 50° to core. Several threads and small patches of pyrrhotite. End of hole at 275.0 Average recovery: 49.7% Recovery in [illegible]: No Samples Size of core: NX (1 7/16")												

CYPRUS ANVIL MINING CORPORATION Page 1 of ____

DIAMOND DRILL CORE LOG Date: _____

Hole Number: P55 V122 Reference Fabric Orientation Diagram:

Project: Vangorda Plateau remap

Location: _____

Claim: _____

Terr.Plane Co-ords.: 6902080.655 N } conversions of PA survey coords.
596619.767 E

Grid Co-ords: _____

Elevation: 1178.0826m conversion of PA All symmetry determinations looking

Total Depth: 203 ft = 61.9m _____ with _____ dipping

Inclination: -90° _____ with dip azimuth _____.

Purpose: to test magnetic anomaly

Reason hole Terminated: _____

Logged by: LCP / GAS Date(s) Logged: August 1984

Drilling Contractor: _____

Size	CORE From ft	To	Collar Cased and Capped: ____
AX	8.0	203	

Hole Cemented: _____

Steel down hole: _____

Started: June 12/55 Completed: June 14/55

Cyprus Anvil Mining Corp. Page 2 of _____

DDH P55V122 (2–8)

Diamond Drill Core Log Date: _____ Logged By: _____

Code	Drillhole	Elevation	Northing	Easting	Units (feet/metres)	R.F.E.	
	2 8	10 16	17 24	25 32	34 39	41 42	
T	P55V122	1178.1	9920809.7	591661 9.8		52	

Code	Drillhole	Depth	Zenith Angle	True Azimuth	Comments
	2 8	10 14	22 26	28 32	34 56
R	P55V122	600	180.0	090.0	AT COLLAR
R			.	.	
R			.	.	
R			.	.

DDH V123

Cyprus Anvil Mining Corp.
Lithologic Log

Page 3 of

Date: Aug 84 Logged By: LCP/GAJ

Code	From	To	Recov.	No.	Unit	Description
	10 14	16 20	22 24	26 28	30 34	35
L	0 0 6			1	#	overburden see original log
L		3 1 0		2	SC0	± $ minor
						Homogenous medium to dk blush green med to coarse grained metabasite - Excellent mottled relict ign texture - poorly foliated - minor dolo. generally no carbonate at all
						contains biotite
L	3 1 0	5 7 0		3	#	missing core box
L	5 7	1 5 4		4	SC0	± $ minor
						same as #2 becomes more broken and jumbled towards
						EOT with lots of jumpers
						At ~ 112 - 137 has steep fracts subll to CA with chl
						and calcite
L	1 5 4	1 5 7		5	SF3	
						med to lt green PS_2 foliated slightly calcareous phyllite -
						S_2 folia are light green with slight silvery tint
						Internally thickly laminated // S_2 with some bands
						containing calcite - some calcite bearing microlithons -
						looks like greening assoc with margins of metabasites - might
						be dealing with Vangorda phyllites - much missing core & unit
						bdrys uncertain
L	1 5 7 0	1 6 5 0		6	SD0	[SC3]
						homogenous, med green, med calcareous chl phyllite - weath tan brown
						S_2 folia are green, no grey looks like fine grained homogenous metabasite

C.A.M.C. 1981 - E - 3A

DDH V122

Cyprus Anvil Mining Corp.
Lithologic Log

Date: _____ Logged By: _____

Code	From	To	Recov.	No.	Unit	Description
1	10 14	16 20	22 24	26 28	30 34	35
L	1650	1900		7	#	no core.
L	1900	2055		8	SBO	much missing core, Mid grey mod soft well lithened, calc phyllite, S_2 folia are light steely grey. Calc bands form fairly well developed lithons
						205 = EOH

DDH V122 (2 — 8)

Cyprus Anvil Mining Corp.

Structural Log

Page 5 of _____

Date: _____ Logged By: LCP

Code	From	To	Feature	Sym	S_0 Dip Direct.	S_1 Dip Direct.	S_2 Dip Direct	Description
	10 — 14	16 — 20	22 — 24	26	28 — 32	34 — 38	40 — 44	
S			PS2				70	S: " at start of hole.
S		280	PS2				60	" poor foln in metabasite
S		570	PS2				62	"
S		740	PS2				55	"
S		890	PS2				60	"
S		1090	PS2				82	"
S		1170	PS2				80	"
S		1320	PS2				80	"
S		1520	PS2				63	"
S		155	PS2				52	good S_2
S		195	PS2				78	

C.A.M.C. 1981 - E - 4

DIAMOND DRILL RECORD,

HOLE NO. 122

PROPERTY Vangorda Creek Y.T.

SHEET NUMBER 1 | SECTION FROM 0.0 TO 203.0 END | STARTED June 12, 1955 | #122

LATITUDE 25,443.24 | DATUM 4000 | COMPLETED June 14, 1955

DEPARTURE 38,868.13 | BEARING Vertical hole | ULTIMATE DEPTH 203.0

ELEVATION 4,157.91 | DIP | PROPOSED DEPTH To test magnetic anomaly.

DEPTH FEET	CORE RECOV	DESCRIPTION	CORE SAMPLE NO.	FOOTAGE	CORE ASSAYS AG.	CU.	PB.	ZN.	SLUDGE SAMPLE NO.	FOOTAGE	SLUDGE ASSAYS AG.	CU.	PB.	ZN.
0.0-8.0		Casing (overburden)												
8.0-152.2	129.1	Medium grained gabbro. Some irregular carbonate threads and a little magnetite are present. The ferromagnesian has been partially serpentinized accompanied by some development of talc. A little talcose slip fibre occurs between 91.0 and 93.0.												
152.2-203.0	38.3	Light greenish-grey, fissile sericite schist. Slightly talcose; shearing at 80° to core. The contact zone between 152.2 and 163.0 shows partial reconstitution to a hybrid, fine grained rock.												
		End of hole at 203.0												
		Recovery: 85.8%												
		Size of Core: AX (1 3/16")												

CYPRUS ANVIL MINING CORPORATION

Page 1 of _____

DIAMOND DRILL CORE LOG

Date: _____

Hole Number: P55 V124

Reference Fabric Orientation Diagram:

Project: Vangorda Plateau remap

Location: _____

Claim: _____

Terr.Plane Co-ords.: 6902376.156 N

Conversion of KA metric coords

596076.4393 E

Grid Co-ords: _____

Elevation: 1153.3298 metres KA elev - 10.61 m.

All symmetry determinations looking

Total Depth: 414.0 feet = 126.2 metres _____ with _____ dipping

Inclination: -90° _____ with dip azimuth _____.

Purpose: to test anomaly above iron oxide swamp

Reason hole Terminated: _____

Logged by: LCP / GAS

Date(s) Logged: August 14/1984

Drilling Contractor: _____

	CORE Size	From	To
	CASING	0.0	8.0 feet
	AX	8.0	414.0 feet

Collar Cased and Capped: _____

Hole Cemented: _____

Steel down hole: _____

Started: June 14/1955 Completed: June 18/1955

Cyprus Anvil Mining Corp. Page 2 of _____

DDH P55V1124 (2–8)

Diamond Drill Core Log Date: _____ Logged By: _____

Code	Drillhole	Elevation	Northing	Easting	Units (feet/metres)	R.F.E.	
	1 2 8	10 16	17 24	25 32	34 39	41 42	
T	P55V1124	1153.3	9102376.2	596076.4			

Code	Drillhole	Depth	Zenith Angle	True Azimuth	Comments
	1 2 8	10 14	22 26	28 32	34 56
R	P55V1124	00	180.0	0.0	AT COLLAR
R			.	.	
R			.	.	
R			.	.

DDH P55V124 (2 Feet 8)

Cyprus Anvil Mining Corp.
Lithologic Log

Page 3 of ____

Date: 14 Aug 84 Logged By: LCP GAJ

Code	From	To	Recov.	No.	Unit	Description
L	00	80		1	#	overburden - check PA log.
L	80	330		2	4L02	(10F0) ±BXA
						dominantly 3 rock types; in order of abundance.
						80% = a) non calc. mod soft PS2 foliated pale creamy white musc phyllite. Abundant x cutting strengers/fracts. with Pyrite. Weath rusty orange - occurs to 32'. = highly altered phyllite
						20% = b) fine grained qtz fold porphyry - green to beige color - mm size qtz phenos. - 10F - at 32'-33' and minor occurrences near top
						tr = c) one piece of coherent fault bxa involving black and tan colored phyllites near top
						vbkn to mod bkn
L	330	1000		3	4L62	→ (4L02) 80:20
						mod soft, non calc, medium to pale green, chl musc phyllite
						S2 folia are med green to pale creamy green.
						Unit contains abundant x cutting hairline fractures containing po.
						Overall looks like an altered metasdmty phyllite - altn mainly to green colors but locally to off creme. ∴ similar rx have been called 3G48 & 3G8
						S2 is relatively planar & smooth
L	1000	1150		4	5C$7	BXA? (4L6weak)
						mod hard, strongly foliated, dolo-chl-qtz Phyllite. Dolo weath to a tan brown - Has a highly foliated/sheared texture with lenses of dolo/qtz between chl folia. - overall texture resembles leopard rock - a few short intervals are 4L type phyllite similar to #2 & #3 - unit looks more sheared/foliated than leopard rock; usually is in context of surroundings this is a potential fault zone = Footwall of "Dickson Ck flt"

change to 115.5

note: use of 7 in context of 5C refers to the foliated metabasite that has anastomizing chl folia between white/grey lenses ie. Leopard rock

C.A.M.C. 1981 - E - 3A

DDH PS5V1234

Cyprus Anvil Mining Corp.
Lithologic Log

Date: _____ Logged By: _____

Code	From	To	Recov.	No.	Unit	Description
	10 14	16 20	22 24	26 28	30 34	35
L	1150	1340		5	SA16	±3 v. minor [3E1 ±3 v. minor] (5<3 minor) 60:40
						dk grey to black mod hard to hard PS_2 foliated generally noncalc siliceous carbonace phyllite.
						Contains rare thin calcareous bands - Crosscutting quartz fractures contain minor pyrite and sphalerite
						Medium interbanded with med green, homogeneous, poorly foliated, slightly calcareous metabasite
						Core mod to strongly broken - recovery ok
L	1340	1950		6	3608	minor ±9 minor
						mod soft to mod hard, non calc, PS_2 fol, med light greenish grey Phyllite
						Overall homogeneous but locally laminated in shades of green and grey partly related to qtz use lamina and partly just to grey green color variation in phyllitic portions. banding/ lamination is // S_2
						176.5-177.5 = bull qtz vein
						Upper contact sharp = last SC lower contact is gradational loss of grey color of phyllite and lightening to green.
						S_2 Folia med to dk steely grey
						Grey color is somewhat lightest in the first 10' of the unit
L	1950	2105		7	3684	±3
						mod soft to mod hard, locally hard, PS_2 foliated, medium green with slight olive tinge, generally non calcareous Phyllite
						Homogeneous; S_2 folia are silvery green with local slight grey tinge.

change to 132.5

same as 3608 in V131

206'-209' contains patchy biotite and is calcareous and looks to be gradational with rest of green phyllites ?? not sure if it might or might not be 383 - unit appears to be attn heals related to #7.

DDH P55V124 (2 — 8)

Cyprus Anvil Mining Corp.
Lithologic Log

Date: _____ Logged By: _____

change to 212.0

Code	From	To	Recov.	No.	Unit	Description
	10 14	16 20	22 24	26 28	30 34	35
L	2105	2140		8	3C0	±3
						med green, homogeneous, poorly foliated, mod hard to hard locally moderately calc, chloritic metabasite
						Speckled relict igneous texture
L	2140	2360		9	3G8	
						Similar to #7 – gradual increase of grey from green going down hole
						lower contact arbitrary, placed by looking at core from 10' away to see green color change.
						Altered phyllites around unit #8
L	2360	3305		10	3G08	±bio minor
						non calc, moderately soft to moderately hard, PS_2 foliated, greenish grey phyllite
						S_2 folia are generally steely grey. locally thinly laminated
						Similar to unit #6
						Minor intervals are mod hard to hard and have felted med dk green felted chlorite texture and are commonly ruined by patchy bio development in both the chl rx and adjacent phyllites. – 10–15 cm thick and mainly in upper portion of unit – may be metabasites
L	3305	3420		11	3G4	→ (4L0)
						mod soft to mod hard PS_2 foliated generally non calc phyllite –
						Starts out as med grey and becomes progressively lighter colored down hole, into tan weath silvery creme phyllite
						Lowermost 1' contains interbanded hard calcareous pale green calc silicate

C.A.M.C. 1981 – E – 3A

DDH P55V124 (2 8)

Cyprus Anvil Mining Corp.
Lithologic Log

Date: _____ Logged By: _____

Code	From	To	Recov.	No.	Unit	Description
	10 14	16 20	22 24	26 28	30 34	35
L	3420	3460		12	3F01	Bio + calc-sil
						Thinly banded sequence of med xln m grey to brown biotite bearing calcite mbl. and off white to pale green calc-silicate bearing qtzite.
L	3460	3565		13	3G8	± GARNET ± BIO. → calc sil.
						non calc, homogenous, PS_2 foliated, moderately hard, medium to med light green, chloritic phyllite - locally biotite bearing
						S_2 folia are green with a grey tinge.
						Locally thin (2-3 cm) zones rich in garnet.
						Last 1' is pale green laminated hard calcsilicate - possible reaction rim with next unit ???
						This is unit most comparable to "mystery rock" of CNR-76-01 in that its green but has grey folia and garnet and seems to be derived from metasedimentary protolith
L	3565	3750		14	3F01	(3D01) 95:5
						med grey to light grey hard med xln PS_2 foliated calc. to mbl.
						containing PS_2 // bands and boudins of mainly
						biotite phyllite accounting for 30-40% of unit -
						Lower portion of interval has interbanded fine grained
						hard biotite (brown) and calc-silicate (green) qvartzite - Thinly
						to thickly laminated between brown and green
L	3750	3840		15	3DP01	
						Hard, PS_2 foliated thinly laminated brown > green biotite + calc silicate
						bearing quartzite, non calc.
						Contains minor very foliated qtz vein material - large version of qtzite in last unit

DDH P55V124

Cyprus Anvil Mining Corp.

Lithologic Log

Date: _____ Logged By: _____

Code	From	To	Recov.	No.	Unit	Description
	10 14	16 20	22 24	26 28	30 34	35
L	384	414.0		16	3D01	(3FO) 70:30
						Mixed unit of thinly banded 3FO biotite mbl and 3D01 biotite +
						calc sil gtzite in proportions 30:70% (gtzite)
						414 = EOH ? check log. EOH = 414.0 feet

C.A.M.C. 1981 – E – 3A

DDH P55V124 Cyprus Anvil Mining Corp. Page 8 of _____

2 8 Feet. Structural Log Date: _____ Logged By: LCP

Code	From	To	Feature	Sym	S_0 Dip Direct.	S_1 Dip Direct.	S_2 Dip Direct	Description
1	10 14	16 20	22 24	26	28 32	34 38	40 44	
S		132	OPS2				54	
S		142	OPS2				55	
S		147	OPS2				47	
S		175	OPS2				62	
S		197	OPS2				58	
S		1,03	OPS2	?			58	? could be shear plane = flaser text
S		1,05	OPS2	?			39	? "
S		1,17	OPS2				83	
S		1,34	OPS2				88	
S		1,55	OPS2				90	
S		1,70	OPS2				82	LN crinkle lineation is down dip
S		1,86	OPS2				70	
S		1,95	OPS2				72	
S		2,17	OPS2				85	
S		2,29	OPS2				69	→ CS_2 CS_N = 33/340 weak
S		2,52	OPS2				79	CS_N = 61/000
S		2,67	OPS2				76	
S		2,79	OPS2				68	
S		2,96	OPS2				82	
S		3,07	OPS2				61	
S		3,27	OPS2				78	
S		3,47	OPS2				75	
S		3,53	OPS2				81	
S		3,58	OPS2				80	in mbl
S		3,73	OPS2				77	
S		3,92	OPS2				73	
S		4,08	OPS2				79	
S		4,03	OPS2				85	

Feet

FAULT

DDH P55.V.124 (2 / 8) Cyprus Anvil Mining Corp.

Page 9 of _____

Structural Log Date: _____ Logged By: _____

Code	From	To	Feature	Sym	S_0 (UPPER) Dip / Direct.	S_1 (INT) Dip / Direct.	S_2 (LOWER) Dip / Direct	Description
1	10–14	16–20	22–24	26	28–32	34–38	40–44	
F	180	330	28					v. broken to mod. broken
F	1010	1155	SIX?					looks more sheared/foliated than typical for SC. This is a potential fault zone — = footwall of Dickson Creek fault?
F	1150	1340	28					moderately to strongly broken/ recovery OK
F								

C.A.M.C. 1981 - E - 4

DIAMOND DRILL RECORD. HOLE NO. 124 #124

PROPERTY Vangorda Creek Y.T.

SHEET NUMBER 1 SECTION FROM 0.0 TO 115.5 STARTED June 14, 1955

LATITUDE 26,461.82 8065.5627 DATUM 4000 COMPLETED June 18, 1955

DEPARTURE 37,111.99 11311.735 BEARING Vertical hole ULTIMATE DEPTH 414.0

ELEVATION 4,076.70 1163.9398 DIP PROPOSED DEPTH To test anomaly above iron oxide swamp.

DEPTH FEET	CORE RECOV	DESCRIPTION	CORE SAMPLE NO.	FOOTAGE	CORE ASSAYS AG.	CU.	PB.	ZN.	SLUDGE SAMPLE NO.	FOOTAGE	SLUDGE ASSAYS AG.	CU.	PB.	ZN.
0.0 - 8.0		Casing (broken quartz porphyry, probable bedrock)												
8.0 - 30.6	17.1	Quartz - feldspar porphyry. Fine grained, chilled appearance for the most part. Some inclusions of partially assimilated sericite schist. Two small patches of fine grained, porous pyrite at 11.2 and 13.5.												
30.6 - 115.5	71.7	Light greenish-grey, fissile sericite schist. Greenish cast due to chlorite. Shearing at 50° to core. A few small patches of white quartz, and some scattered carbonate threads.												

HOLE NO. #124

PROPERTY Vangorda Creek Y.T.

SHEET NUMBER 2 SECTION FROM 115.5 TO 356.5 STARTED

LATITUDE DATUM COMPLETED

DEPARTURE BEARING ULTIMATE DEPTH

ELEVATION DIP PROPOSED DEPTH

DEPTH FEET	CORE RECOV	DESCRIPTION	CORE SAMPLE NO.	FOOTAGE	CORE ASSAYS AG.	CU.	PB.	ZN.	SLUDGE SAMPLE NO.	FOOTAGE	SLUDGE ASSAYS AG.	CU.	PB.	ZN.
115.5-132.5 15 17	11.4	Graphitic schist with some finely interbanded silica. Shearing at 70° to core but crenulated in part. Some intercalated chlorite schist, and some white quartz.												
132.5 356.5	175.4	Dark grey, fissile sericite schist Shearing at 80° to core. At 137.0, 159.5 and 161.0, small patches of dark brown rock which may be chilled lamprophyre. Greenish cast in some sections of the schist due to chlorite. Fine grained diorite tongue between 210.5 and 212.0 The schist is dominantly a chloritic type in some sections.												

DIAMOND DRILL RECORD.

PROPERTY Vangorda Creek Y.T. HOLE NO. #124

SHEET NUMBER 3 SECTION FROM 356.5 TO 414.0 STARTED

LATITUDE DATUM End. COMPLETED

DEPARTURE BEARING ULTIMATE DEPTH

ELEVATION DIP PROPOSED DEPTH

DEPTH FEET	CORE RECOV	DESCRIPTION	CORE SAMPLE NO.	FOOTAGE	CORE ASSAYS AG.	CU.	PB.	ZN.	SLUDGE SAMPLE NO.	FOOTAGE	SLUDGE ASSAYS AG.	CU.	PB.	ZN.
356.5-	19.8	Quartz-biotite schist. The												
376.6		biotite is fine grained, dark brown												
		and lies in bands roughly												
		parallel to the shearing at 80°												
		to core. Shearing is crenulated												
		in part. Several small patches												
		of intruded White quartz.												
376.6-	34.4	Quartz-biotite schist as in												
414.0		previous section, but containing												
		some intercalated greenstone												
		between 376.6 and 390.0. The												
		schist is likely derived from a												
		former sandstone.												
		End of Hole at 414.0												
		Average Recovery: 81.2%												
		Size of Core: BX (1 3/16")												

[illegible] RECORD, [illegible] NO. [illegible]

PROPERTY Vangorda Creek Y.T.

SHEET NUMBER 1. SECTION FROM 0.0 TO 1103.0 STARTED June 11, 1955

LATITUDE 25,443.74 7755.0996 DATUM 4000 END COMPLETED June 12, 1955

DEPARTURE 38,668.12 11847.006 BEARING Vertical hole ULTIMATE DEPTH 2030

ELEVATION 4,137.71 1188.6926 DIP PROPOSED DEPTH To test magnetic anomaly

DEPTH FEET	CORE RECOV	DESCRIPTION	CORE SAMPLE NO.	FOOTAGE	CORE ASSAYS AG.	CU.	PB.	ZN.	SLUDGE SAMPLE NO.	FOOTAGE	SLUDGE ASSAYS AG.	CU.	PB.	ZN.
[illegible]		Casing (overburden)												
	1[illegible]	Medium grained gabbro. Some irregular carbonate threads and a little magnetite are present. The ferromagnesian has been partially serpentinized accompanied by some development of talc. A little talc-slip fibre occurs between 90 and 92.0.												
[illegible]	[illegible]	Light greenish-grey, fissile sericite schist. Slightly talcose, shearing at 80° to core. The contact zone between 1522 and 1130 shows partial recrystallization to a hybrid fine grained rock. End of hole at 2030												
		Recovery: [illegible] %												

[illegible] 124

[illegible] Vangorda Creek Y.T.

SHEET NUMBER 1 | SECTION FROM 0.0 TO 115.5 | STARTED June 14, 1955

LATITUDE 26,461.82 | DATUM 4,000 | COMPLETED June 18, 1955

DEPARTURE 37,111.99 | BEARING Vertical hole | ULTIMATE DEPTH 414.0

ELEVATION 4,071.70 | DIP | PROPOSED DEPTH To test anomaly [illegible]

DEPTH FEET	CORE RECOV	DESCRIPTION	CORE SAMPLE NO.	FOOTAGE	CORE ASSAYS AG.	CU.	PB.	ZN.	BLEDGE SAMPLE NO.	FOOTAGE	BLEDGE ASSAYS AG.	CU.	PB.
[illegible]		Casing (broken quartz porphyry, probable bedrock)											
[illegible]	17.1	Quartz-feldspar porphyry. Fine grained, chilled appearance for the most part. Some inclusions of partially assimilated sericite schist. Two small patches of fine grained, porous pyrite at 11.2 and 13.5.											
[illegible]	71.7	Light greenish-grey, fissile sericite schist. Greenish cast due to chlorite. Shearing at 50° to core. A few small patches of white quartz, and some scattered carbonate threads.											

DIAMOND DRILL RECORD, HOLE NO. 124

PROPERTY Vangorda Creek Y.T.

SHEET NUMBER 2 SECTION FROM 115.5 TO 356.5 STARTED

LATITUDE DATUM COMPLETED

DEPARTURE BEARING ULTIMATE DEPTH

ELEVATION DIP PROPOSED DEPTH

DEPTH FEET	CORE RECOV	DESCRIPTION.	CORE SAMPLE NO.	FOOTAGE	CORE ASSAYS AG.	CU.	PB.	ZN.	SLUDGE SAMPLE NO.	FOOTAGE	SLUDGE ASSAYS AG.	CU.	PB.	ZN.
115.5-[illegible]	114	Graphitic schist with some finely interbanded silica. Shearing at 70° to core but crenulated in part. Some intercalated chlorite schist, and some white quartz.												
[illegible]	175.4	Dark grey, fissile sericite schist. Shearing at 80° to core. At 137.0, 159.5 and 161.0, small patches of dark brown rock which may be chilled lamprophyre. Greenish cast in some sections of the schist due to chlorite. Fine grained diorite tongue between 210.5 and 212.0 The schist is dominantly a chloritic type in some sections.												

DIAMOND DRILL RECORD, VOL. NO. 124

PROPERTY Vangorda Creek Y.T.

SHEET NUMBER 3 SECTION FROM 356.5 TO 414.0 STARTED

LATITUDE DATUM End COMPLETED

DEPARTURE BEARING ULTIMATE DEPTH

ELEVATION DIP PROPOSED DEPTH

DEPTH FEET	CORE RECOV	DESCRIPTION	CORE SAMPLE NO.	FOOTAGE	CORE ASSAYS AG.	CU.	PB.	ZN.	SLUDGE SAMPLE NO.	FOOTAGE	SLUDGE ASSAYS AG.	CU.	PB.	ZN.
356.5-374.6	19.8	Quartz-biotite schist. The biotite is fine grained, dark brown and lies in bands roughly parallel to the shearing at 80° to core. Shearing is crenulated in part. Several small patches of intruded white quartz.												
374.6-414.0	34.4	Quartz-biotite schist as in previous section, but containing some intercalated greenstone between 374.6 and 390.0. The schist is likely derived from a former sandstone. End of Hole at 414.0. Average Recovery: 81.7% Size of Core: [illegible]												

CYPRUS ANVIL MINING CORPORATION Page 1 of _____

DIAMOND DRILL CORE LOG Date: _____

Hole Number: P55V127 Reference Fabric Orientation Diagram:

Project: Vangorda Plateau Remap

Location: _____

Claim: _____

Terr.Plane Co-ords.: KA 6902337.174 N

conversion of metric coords 595968.5316 E

Grid Co-ords: _____

Elevation: 1152.3666 metres KA elev -10.61m. All symmetry determinations looking

Total Depth: 479 feet _____ with _____ dipping

Inclination: -90° _____ with dip azimuth _____.

Purpose: _____

Reason hole Terminated: _____

Logged by: _____ Date(s) Logged: _____

Drilling Contractor: _____

CORE Size	From	To

Collar Cased and Capped: _____

Hole Cemented: _____

Steel down hole: _____

Started: June 19/55 Completed: June 23/55

Cyprus Anvil Mining Corp. Page 2 of _____

DDH P55V1127 (2–8)

Diamond Drill Core Log Date: _____ Logged By: _____

Code	Drillhole	Elevation	Northing	Easting	Units (feet/metres)	R.F.E.	
	1 2 8	10 16	17 24	25 32	34 39	41 42	
T	P55V1127	1/1/52.4	9023371.2	595968.5			

Code	Drillhole	Depth	Zenith Angle	True Azimuth	Comments
	1 2 8	10 14	22 26	28 32	34 56
R	P55V1127	000	180.0	0.0	AT COLLAR
R			.	.	
R			.	.	
R			.	.	
R			.	.	
R			.	.	
R			.	.	
R			.	.	
R			.	.	
R			.	.	
R			.	.	
R			.	.	
R			.	.	
R			.	.	
R			.	.	
R			.	.	
R			.	.	
R			.	.	
R			.	.	
R					
R					
R					
R					
R					
R					

Code	Drillhole	Comments, Errant Remarks, Snivellings and / or Lewd Suggestions
	1 2 8	10 56

C.A.M.C. 1981 - E-2

DDH V.127 (2 – 8 Feet)

Cyprus Anvil Mining Corp.
Lithologic Log

Date: Aug 84 Logged By: LCP/GAJ

Code	From	To	Recov.	No.	Unit	Description
1	10 – 14	16 – 20	22 – 24	26 – 28	30 – 34	35
L	00			1	#	overburden.
L		80		2	SA16	9 minor ± BXA.
						dk grey to black, PS_2 foliated, moderately hard, non calc Phyllite
						S_2 folia are dk grey
						locally with qtz fly banding
						Thought unit are bits & pieces of 4L that might be jumpers – Top box has 2/3 of core missing.
						Lower contact uncertain due to jumbled & lost core
						55' – FOI is mod to heavily crackle brxtd with some disrupted S_2 and local development (≈60') of some Fault brxn
L	80	167		3	360	
						mod soft med grey with slight greenish tinge, generally PS_2 foliated non calc Phyllite
						Thinly laminated in shades of grey resulting from slightly more qtz use bands and partly from pressure solution striping. This unit unlike the last has a regular S_2 foliation
						S_2 folia are steely grey
						Core v. broken to pokerchippy recovery not bad ≈ 80–90%
L	167	173		4	336	(1099po) 50:50
						mod soft to mod hard, medium green, non calc. Homogenous chl – musc phyllite. S_2 folia are med green – In lower ½ of unit

DDH V127 (2–8)

Cyprus Anvil Mining Corp.
Lithologic Log

Date: Logged By:

Code	From	To	Recov.	No.	Unit	Description
1	10–14	16–20	22–24	26–28	30–34	35
						is qtz veined with po in veins – ~1/3 of core missing
						Correlation of unit uncertain – may be metabasic
						rocks & similar to the homogenous green qtzose
						rx in CNR-76-01 & deeper in this hole. –
L	173	1995		5	368	± Bio minor
						med to med light green, mod soft to mod hard, PS_2 foliated,
						non calc Phyllite
						Thinly to thickly lam – distinctively laminated (in greens)
						appearance $\parallel S_2$ in contrast to unit #4 –
						S_2 folia are med to pale green locally with a silvery
						tint – no grey tint left on foln.
						Near top have biotite dissem in some bands
						Mod broken with ½ of core missing to 184' but below
						that most core present
L	1995	2110		6	360	(10Q0) 80:20
						med to mdk green homogenous PS_2 ? foliated non calc
						mod hard to hard metabasite. Definitely foliated
						but no leopard rock texture – local relict ign text
						some qtz veins interbanded – Lower contact is
						1' of lighter green more foliated equivalent. Lower
						contact placed at start of banding in adjacent
						phyllites – 2-3' of missing core.
L	2110	2540		7	360	
						non calc mod soft to mod hard PS_2 foliated med greenish grey
						Phyllite. S_2 folia are silvery to steely grey with greenish tint

C.A.M.C. 1981 – E – 3A

Thinly to thickly lam in shades of grey & green but all the same hardness.

232' is 6" of green & brown banded phyllite reminiscent of "calc-sil" in ~~[illegible]~~ CNR-76-01 and next unit – mod bkn to intact – all there

DDH V127 (2–8)

Cyprus Anvil Mining Corp.
Lithologic Log

Date: ____ Logged By: ____

Code	From	To	Recov.	No.	Unit	Description
1	10–14	16–20	22–24	26–28	30–34	35
L	2540	2560		8	3DB	
						med and dk med green with patchy brown biotite bands, non calc,
						mod hard, Overall fairly homogenous, chlorite biotite phyllite
						PS_2 foliated - - Very similar to the "calc-sils" of CNR-76-01
						intact - 10% bio mainly dk green bands (50%)
L	2560	2960		9	3GO	
						similar to #7
						S_2 folia are steely grey
L	2960	2980		10	3DB	
						chl bio phyllite non calc, hard, banded between dark med
						green and brown - Like #8
						PS_2 foliated - thickly lam to thinly banded
						30-40% bio
L	2980	3480		11	3GO	(3G4) 95:5
						same as #7
						Contains minor small irregular garnet and from 312-314
						that is altered pale green, with pale green-creme S_2 folia,
						musc > chl version of the phyllite in gradational contact
						with the dominant 3GO phyllite
L	348	353		12	3G4	Bio (3CO) 80:20
						upper + lower contact gradational and marked by slight lightening
						of color - start to see "matrix biotite" looks like symmet
						developed altn around 2 6" dk med green noncalc homogenous
						metabasites near center of interval

DDH V127

Cyprus Anvil Mining Corp.
Lithologic Log

Date: _____ Logged By: _____

Code	From	To	Recov.	No.	Unit	Description
	10 14	16 20	22 24	26 28	30 34	35
L	353	361		13	360	
						Same as #7 etc.
						lower contact gradational and is placed at point where
						banding and grey tinge on S_2 folia is lost.
						mod bkn.
L	361	440		14	???	
						overall is med light green, mod soft, FS_2 foliated, non
						calc, chloritic phyllite
						S_2 folia are med green no grey tinge.
						Speckled appearance on cut surface for much of unit.
						Locally (~417') is thickly laminated to thinly banded
						with brown thin bands which contain biotite.
						Upper portion 350–355 have euhedral py 2mm
						across now weath to Fe oxide
						Unit correlates fairly well with rx just above
						3F0 in CNR-7601 is same rock and is no clearer
						here just what it is – can't tell if metased
						or metaign – banded part looks metased
						speckled part looks metaign
						Minor pink garnet loosely assoc with the bio banded
						portion.
						Locally thickly laminated between med green and bluish grey
						with minor thin bio bands or lamina as well.
L	440	479			3F0	
						med xln, med grey to lt grey calcite mbl with bands and
						bandins of mainly biotite bearing (brown) ± locally greenish (calc silicate)

C.A.M.C. 1981 – E – 3A

Note: Wholehole compares well with CNR-76-01

20–40% of unit is silicates.
Top 1' is bxtn & weath orange & is more finely xln suggesting some shearing along contact. ~2/3 of core missing from last box.

DDH V-127 (2–8) Cyprus Anvil Mining Corp. Page 7 of _____

Structural Log Date: _____ Logged By: _____

Code	From	To	Feature	Sym	S_0 Dip Direct.	S_1 Dip Direct.	S_2 Dip Direct	Description
1	10–14	16–20	22–24	26	28–32	34–38	40–44	
S		1450	PS2				77	
S		1540	PS2				90	
S		1750	PS2				70	
S		1800	PS2				90	
S		1950	PS2				65	
S		1110	PS2				80	
S		1250	PS2				68	
S		1420	PS2				55	
S		1610	PS2				73	
S		1820	PS2				80	
S		1912	PS2				77	
S		2000	PS2				66	
S		2114	PS2				60	$CS_N = 28/000$
S		2124	PS2				76	$CS_N = 32/000$
S		2139	PS2				74	
S		2154	PS2				60	
S		2168	PS2				80	$CS_N = 30/000$
S		2178	PS2				74	
S		2195	PS2				72	
S		3118	PS2				78	$CS_N = 58/000$
S		3148	PS2				82	
S		3158	PS2				90	
S		3185	PS2				74	
S		3195	PS2				85	
S		4143	PS2				78	
S		4117	PS2				70	$CS_N = 45/000$
S		4136	PS2				65	
S		4152	PS2				78	
S		4161	PS2				80	
S		4179	PS2				75	

DIAMOND DRILL RECORD.

HOLE NO. #127

PROPERTY Vangorda Creek Y.T.

SHEET NUMBER 1 — SECTION FROM 0.0 TO 171.0 — STARTED June 19, 1955

LATITUDE 26,343.64 8029.5415 — DATUM 4000 — COMPLETED June 23, 1955

DEPARTURE 36,754.41 11202.744 — BEARING Vertical hole — ULTIMATE DEPTH 479.0

ELEVATION 4,073.54 1162.9766 — DIP — PROPOSED DEPTH To test above area of iron oxide deposition

DEPTH FEET	CORE RECOV	DESCRIPTION	CORE SAMPLE NO.	FOOTAGE	CORE ASSAYS AG.	CU.	PB.	ZN.	SLUDGE SAMPLE NO.	FOOTAGE	SLUDGE ASSAYS AG.	CU.	PB.	ZN.
0.0-		Casing (Broken, oxidized												
17.0		detrital material)												
17.0-	48	Sericite schist containing												
71.0		considerable reddish-brown												
		iron oxide stain. Shearing at												
		90° to core. No evidence of												
		sulphide; stain possibly due to												
		altered carbonate.												
71.0-	39.1	Graphitic schist and interbanded												
80.7		silica. Shearing crenulated												
		in part but averaging 80° to												
		core.												
80.7-	73.1	Medium grey to dark grey,												
171.0		fissile sericite schist. Typical												
		host rock of main ore zone.												
		White quartz from 82.5 to 85.5												

Shearing at 80° to core.

DIAMOND DRILL RECORD.

HOLE NO. 127
#127

PROPERTY Vangorda Creek Y.T.

SHEET NUMBER 2 SECTION FROM 171.0 TO 385.0 STARTED

LATITUDE DATUM COMPLETED

DEPARTURE BEARING ULTIMATE DEPTH

ELEVATION DIP PROPOSED DEPTH

DEPTH FEET	CORE RECOV	DESCRIPTION	CORE SAMPLE NO.	FOOTAGE	CORE ASSAYS AG.	CU.	PB.	ZN.	SLUDGE SAMPLE NO.	FOOTAGE	SLUDGE ASSAYS AG.	CU.	PB.	ZN.
171.0-199.5	26.8	Light grey to medium grey sericite schist. Slight greenish cast due to chlorite. Shearing at 90° to core. Some irregular patches of white quartz.												
199.5-210.5	11.0	Fine grained greenstone (andesite) containing scattered threads and small patches of pyrrhotite. Two patches of white quartz.												
210.5-385.0	144.1	Medium grey to dark grey sericite schist. Fissile shearing at 80° to core. Sparse pyrrhotite plated on the shear planes. Several small patches of quartz-chlorite. A few small reddish-black garnets between												

DIAMOND DRILL RECORD.

HOLE NO. 127
#127

PROPERTY Vangorda Creek Y.T.

SHEET NUMBER _____ SECTION FROM _____ TO End. STARTED _____

LATITUDE _____ DATUM _____ COMPLETED _____

DEPARTURE _____ BEARING _____ ULTIMATE DEPTH _____

ELEVATION _____ DIP _____ PROPOSED DEPTH _____

DEPTH FEET	CORE RECOV	DESCRIPTION	CORE SAMPLE NO.	FOOTAGE	CORE ASSAYS AG.	CU.	PB.	ZN.	SLUDGE SAMPLE NO.	FOOTAGE	SLUDGE ASSAYS AG.	CU.	PB.	ZN.
		End of Hole at 479.0												
		Average Recovery: 80.1%												
		Size of Core: AX (1 5/16")												

DIAMOND DRILL RECORD.

HOLE NO. 127
#127

PROPERTY Vangorda Creek Y.T.

SHEET NUMBER 3 | SECTION FROM 385.0 TO 479.0 | STARTED

LATITUDE | DATUM End | COMPLETED

DEPARTURE | BEARING | ULTIMATE DEPTH

ELEVATION | DIP | PROPOSED DEPTH

DEPTH FEET	CORE RECOV	DESCRIPTION	CORE SAMPLE NO.	FOOTAGE	CORE ASSAYS AG.	CU.	PB.	ZN.	SLUDGE SAMPLE NO.	FOOTAGE	SLUDGE ASSAYS AG.	CU.	PB.	ZN.
385.0-440.0	52.2	Medium grey, non-fissile sericite schist. Fine white mottling throughout and more compact than previous section. Shearing at 80° to core; sparse pyrrhotite in the shear planes.												
440.0-479.0	32.6	Fine grained grey carbonate, containing irregular bands and patches of dark brown rock. Does not appear to be a cemented breccia; possibly a recrystallized impure limestone. The dark bands average about 70° to the core but also show convolutions. The carbonate effervesces readily. A little biotite in the dark sections.												

DIAMOND DRILL RECORD,

HOLE NO. 127

PROPERTY Vangorda Creek Y.T.

SHEET NUMBER 1

LATITUDE 26,343.64

DEPARTURE 36,754.41

ELEVATION 4,073.54

SECTION FROM 0.0 TO 1710

DATUM 4000

BEARING Vertical hole

DIP

STARTED June 12, 1955

COMPLETED June 23, 1955

ULTIMATE DEPTH 479.0

PROPOSED DEPTH To test above area of iron & carb. exposure

DEPTH FEET	CORE RECOV	DESCRIPTION	CORE SAMPLE NO.	FOOTAGE	CORE ASSAYS AG.	CU.	PB.	ZN.	SLUDGE SAMPLE NO.	FOOTAGE	SLUDGE ASSAYS AG.	CU.	PB.	ZN.
0.0-15.0		Casing (broken cribbed detrital material)												
15.0-110.0	48	Sericite schist containing considerable reddish-brown iron oxide stain. Shearing at 90° to core. No evidence of sulphides; stain possibly due to altered carbonate.												
110.0-290.7	391	Graphitic schist and interbanded silica. Shearing accentuated in part but averaging 60° to core.												
290.7-410.0	73.1	Medium grey to dark grey fissile sericite schist. Typical host rock of main ore zone. White quartz from 61.5 to 65.5 Shearing at 60° to core.												

DIAMOND DRILL RECORD,

HOLE NO. 127

PROPERTY Vangorda Creek Y.T.

SHEET NUMBER 2 | SECTION FROM 1110 TO 3850.0 | STARTED

LATITUDE | DATUM | COMPLETED

DEPARTURE | BEARING | ULTIMATE DEPTH

ELEVATION | DIP | PROPOSED DEPTH

DEPTH FEET	CORE RECOV	DESCRIPTION	CORE SAMPLE NO.	FOOTAGE	CORE ASSAYS AG.	CU.	PB.	ZN.	SLUDGE SAMPLE NO.	FOOTAGE	SLUDGE ASSAYS AG.	CU.	PB.	ZN.
1110-1145	26.8	Light yellowish to medium grey sericite schist. Slightly greenish cast due to chlorite. Shearing at 60° to core. Some irregular patches of white quartz.												
1145-1185	11.0	Fine grained greenstone (andesite) containing scattered threads and small patches of pyrrhotite. Two patches of white quartz.												
1185-1250	14.1	Medium grey to dark grey sericite schist. Fissile shearing at 60° to core. Sparse pyrrhotite plated on the shear planes. Several small patches of quartz-chlorite. Also small reddish-black garnets between 3120 and 3190.												

DIAMOND DRILL RECORD,

HOLE NO. 127

PROPERTY Vangorda Creek Y.T.

SHEET NUMBER 3 | SECTION FROM 385.0 TO 477.0 | STARTED

LATITUDE | DATUM End | COMPLETED

DEPARTURE | BEARING | ULTIMATE DEPTH

ELEVATION | DIP | PROPOSED DEPTH

DEPTH FEET	CORE RECOV	DESCRIPTION	CORE SAMPLE NO.	FOOTAGE	CORE ASSAYS AG.	CU.	PB.	ZN.	SLUDGE SAMPLE NO.	FOOTAGE	SLUDGE ASSAYS AG.	CU.	PB.	ZN.
385- 442		Medium grey, non-fissile sericite schist. Fine white matting throughout and more compact than previous section. Shearing at 60° to core; sparse pyrrhotite in the shear planes.												
442- 470	326	Fine grained grey carbonate containing irregular bands and patches of dark brown rock. Does not appear to be a cemented breccia; possibly a recrystallized impure lime stone. The dark bands average about 70° to the core but also show convolutions. The carbonate effervesces readily. A little pyrite in the dark sections.												

CYPRUS ANVIL MINING CORPORATION Page 1 of ____

DIAMOND DRILL CORE LOG Date: _____

Hole Number: P55V131

Reference Fabric Orientation Diagram:

Project: Vangorda Plateau Remap

Location: _____

Claim: _____

Terr.Plane Co-ords.: 6902285.719 N

conversion of KA metric coords

596001.2936 E

Grid Co-ords: _____

Elevation: 1156.2955 KA elev -10.61 m.

All symmetry determinations looking

Total Depth: 428.0 feet = 130.5 metres NW with 52 dipping

Inclination: -90° SW with dip azimuth _____.

Purpose: to test areas of iron oxide deposition (i.e. gossan)

Reason hole Terminated: _____

Logged by: GAJ/LCP Date(s) Logged: Aug 13/1984

Drilling Contractor: _____

CORE Size	From	To	
Casing	0.0	3.0	feet
AX	3.0	428.0	feet

Collar Cased and Capped: ____

Hole Cemented: _____

Steel down hole: _____

Started: June 23/55 Completed: June 28/55

Cyprus Anvil Mining Corp. Page 2 of _____

DDH P55V131 (2–8)

Diamond Drill Core Log Date: _____ Logged By: _____

Code	Drillhole	Elevation	Northing	Easting	Units (feet/metres)	R.F.E.	
	2 8	10 16	17 24	25 32	34 39	41 42	
T	P55V131	1115613	9022851.7	596001.3			

Code	Drillhole	Depth	Zenith Angle	True Azimuth	Comments
	2 8	10 14	22 26	28 32	34 56
R	P55V131	00	180.0	0.0	AT COLLAR
R			.	.	
R			.	.	
R			.	.	
R			.	.	
R			.	.	
R			.	.	
R			.	.	
R			.	.	
R			.	.	
R			.	.	
R			.	.	
R			.	.	
R			.	.	
R			.	.	
R			.	.	
R			.	.	
R			.	.	
R			.	.	
R			.	.	
R			.	.	
R			.	.	
R			.	.	
R			.	.	
R			.	.	
R			.	.	
R			.	.	
R			.	.	

Code	Drillhole	Comments, Errant Remarks, Snivellings and / or Lewd Suggestions
	2 8	10 56

C.A.M.C. 1981 - E-2

DDH P.5.5.V.L.3.L
2 8

Cyprus Anvil Mining Corp.
Lithologic Log

Date: Aug 13/84 Logged By: GAJ/CCP

Code	From	To	Recov.	No.	Unit	Description
1	10 14	16 20	22 24	26 28	30 34	35
L	0 0			1	1H	o/B check original log.
				2		No core
	310 0	619 0		3		FAULT BXA
	310					Dk grey fault bxa w/ clasts of qtz, sulphides in a dk grey, noncalc, hard matrix. Maybe 3'-4' core left in box. Includes short pieces typical SA fault rock w/ augens & lenses of qtz between dk grey folia. Pieces of SC4@. And qtz vein material. Remainder of box missing. Pieces presumed representative - therefore indicates a fairly substantial fault zone. Orientations of faults IND.
L	619 0	710 0		4	31619	
						Dk grey, mod. soft, PS2 f1td, homog, noncalc phyllite w/ orange-brn weathering along S2 folia. Minor py in xcutting fractures. Reasonably planar S2.
L	710 0	1212 3 0		5	316018	Minor
						Med greenish grey, PS2 f1td, noncalc, mod. soft to mod. hrd. phyllite. Overall fairly homogeneous. Minor po diss. along S2. Green tinge from interlaminated grey & greenish grey equally soft phyllites. S2 folia steely grey w/ locally a definite green tint. Interval 137'-140' qtz veins & ass. dk prismatic mineral. Rock seems altered near qtz veins. Minor interlayered dk. grey phyllite in upper 10' of unit. Rock gets gradually greener in last 15' - gradational change to next unit.

First box.

DDH V13-1

Cyprus Anvil Mining Corp.
Lithologic Log

Date: Aug 13/84 Logged By: GAS/LCP

Code	From	To	Recov.	No.	Unit	Description
	10 14	16 20	22 24	26 28	30 34	35
L	1218.0	1237.0		16	31B16	(3G8) 50:50
						light to med green, PS2 flt, noncalc, mod soft to mod hrd, fairly homogenous, chlorite-musc phyllite. Med to med dk green S2 folia w/ distinct muscovite silvery lustre. Does not preserve grey colour on folia — can locally see subtle grey banding on cut surface similar to lower part of last unit. Suggest largely altered 3G although some fine grained 3B metabasite may be included. Minor diss po largely as small flecks along S2. Portions which may be 3B more homog, slightly speckled, mainly in centre.
L	1237.0	1416.0		17	31G1B1	
						Med. grey green, mod. banded, noncalc, PS2 flt, mod soft to mod hrd phyllite. Grey-green S2 folia to greenish grey. Similar to lower portion of unit # 5. Probably largely altered phyllite.
L	1416.0	2790		18	31B121	bio (3G8 bio) [3B2 bio] 50:50
						Mod. hrd to mod. soft, med green, noncalc, PS2 flt, chlorite-bio phyllite. Also musc. Lower portion homogenous although foliated. Upper portion thickly laminated in shades of green, grey, brn. Laminated mostly above 264' may be altered pelite — banding, some grey bands. Lower portions may be foliated metabasite — general homogeneity. Ass. of metabasite w/ greening of 3G phyllite — similar to seen in DDH V127. No major flt.
L	2790	2900		19	31C101	
						Med. green, hrd, noncalc, well flt'd to mod. flt'd, speckled in green, off-white, yellowish & med green metabasite. Homogenous. Could relict igneous texture. Intrud

DDH V-131

Cyprus Anvil Mining Corp.
Lithologic Log

Date: Aug 13/84 Logged By: GAS/ICP

Code	From	To	Recov.	No.	Unit	Description
	10 14	16 20	22 24	26 28	30 34	35
L	12719 0	12915 0		110	13182	
						Mod soft to mod hrd, PS2 flte, noncalc, chlorite-bio phyllite. Similar to portions of Unit # 8 local fine speckled texture. Good mod green chloritic folia however contact 1st appearance grey phyllitic folia.
L	12915 0	13415 0		111	13608	
						Mod. soft, PS2 flte, greenish grey, noncalc, overall fairly homog. phyllite. In detail, thickly laminated mod greenish grey, med grey, light green, med green, generally fairly soft phyllitic material. Locally more ghosse green bands. S2 folia largely greenish grey to grey. Similar to Unit # 5.
L	13415 0	13416 0		112	13602	
						Mod. green, noncalc, mod foliated, mottled, chloritic phyllite. Approaching leopard rock texture locally. Has bands w/ felted texture resembling green interbands in bottom 81-AX-01. Intact.
L	13460 0	13807 0		113	13608	± garnet minor ± bio minor
						Mod. soft to mod. hrd, greenish grey, noncalc, PS2 flte, overall fairly homogenous phyllite. In detail thickly laminated to thinly banded in shades of grey & green. Green is ghosse bands — slightly harder w/ green mineral w/ minors garnet and biotite locally. S2 folia are greenish grey — distinct grey tinged.

DDH V131

Cyprus Anvil Mining Corp.
Lithologic Log

Date: Aug 13/84 Logged By: GAS/LCP

Code	From	To	Recov.	No.	Unit	Description
L		4175		14	3G2	(3B2) (3G8) (3F0)
						hargely noncalc, mod hrd to mod. soft, med. green, PS2 fltd, chlorite phyllite w/ fine off-white speckled texture. Included in dominant lithology are many green to greenish grey chlorite phyllites ± biotite similar to last unit. Also some brn biotitic marble & assoc. light yellowish green calc-silicates - Marble at 406' (3") w/ calc silicates for about 1' below. Calc-silicates again in last 8" of this unit - adjacent to contact w/ next unit. Largely fine grained 3C w/ lesser amounts of altered phyllites.
						Same speckled texture as mystery rock in V127 but generally darker colour (green). Gregg does not correlate w/ the mystery rock
L		4280		15	3F0	
						light med. grey, med. xlline calcite marble w/ bands biot schist & calc silicate. these comprise about 50% of unit. Not as boudinaged as V127 - tends to be more banded. Top 2' have interbanded hrd, green calc-silicates & small sections fine grained light-grey white qtzite which could be a mylonite.
						(In DDH V124 3F0 at 357')
						EOH

Feet

DDH V131 (2–8)

Cyprus Anvil Mining Corp.

Structural Log

Page 7 of ____

Date: Aug 13/84 Logged By: GAJ

Code (1)	From (10–14)	To (16–20)	Feature (22–24)	Sym (26)	S_0 Dip (28–32)	S_0 Direct.	S_1 Dip (34–38)	S_1 Direct.	S_2 Dip (40–44)	S_2 Direct	Description
S		690	PS2						90		
S		830	PS2						85		
S		1000	PS2						90		
S		1330	PS2						85		
S		1480	PS2						85		
S		1790	PS2						85		
S		2110	PS2						85		
S		2430	PS2						80		
S		2630	PS2						73		
S		2740	PS2						45		
S		3000	PS2						85		
S		3260	PS2						85		
S		3590	PS2						75		
S		4000	PS2						90		
S		4260	PS2						85		
											EOH

#131

PROPERTY Vangorda Creek Y.T.

SHEET NUMBER 1 | SECTION FROM 0.0 TO 73.0 | STARTED June 23, 1955

LATITUDE 26,171.85 7977.1799 | DATUM 4000 | COMPLETED June 28, 1955

DEPARTURE 36,857.27 11234.096 | BEARING Vertical hole | ULTIMATE DEPTH 428.0

ELEVATION 4,086.43 1166.9055 | DIP | PROPOSED DEPTH To test above area of iron oxide deposition

DEPTH FEET	CORE RECOV	DESCRIPTION	CORE SAMPLE NO.	FOOTAGE	CORE ASSAYS AG.	CU.	PB.	ZN.	SLUDGE SAMPLE NO.	FOOTAGE	SLUDGE ASSAYS AG.	CU.	PB.	ZN.
0.0-		Casing (broken bedrock, qtz-												
3.0		feldspar porphyry)												
3.0-	26.2	Quartz-feldspar porphyry.												
41.6		Anhedral quartz eyes up to 1/8"												
		diameter and subhedral white												
		feldspar up to 1/4" diameter.												
		Considerable iron oxide stain												
		from 3.0 to 19.3, the porphyry												
		having a partially leached												
		appearance.												
41.6-	17.7	Brecciated graphitic schist												
73.0		containing numerous threads and												
		small patches of white quartz.												
		A little pyrite between 50.0 and												
30		51.0. Inclusion of greenish-grey												
		schist from 530 to 550.												

PROPERTY Vangorda Creek Y.T. #131

SHEET NUMBER 2 SECTION FROM 73.0 TO 418.0 STARTED

LATITUDE DATUM COMPLETED

DEPARTURE BEARING ULTIMATE DEPTH

ELEVATION DIP PROPOSED DEPTH

DEPTH FEET	CORE RECOV	DESCRIPTION	CORE SAMPLE NO.	FOOTAGE	CORE ASSAYS AG.	CU.	PB.	ZN.	SLUDGE SAMPLE NO.	FOOTAGE	SLUDGE ASSAYS AG.	CU.	PB.	ZN.
73.0-279.2	146.0	Medium greenish-grey sericite schist containing sections of dark grey interbanded schist. Bearing at 80° to core. A few small patches of white quartz.												
279.2-291.5	12.1	Medium grained, dark green diorite. Contacts are chilled and partially blended with the schist walls.												
291.5-418.0	95.6	Medium grey to greenish-grey sericite schist. Fissile shearing at 70° to core. A few small patches of white quartz, with some associated chlorite. The schist is non-fissile and more chloritic from 372.0 to 418.0												

#131

PROPERTY Vanguarda Creek Y.T.

SHEET NUMBER 3 | SECTION FROM 418.0 TO 428.0 | STARTED

LATITUDE | DATUM End | COMPLETED

DEPARTURE | BEARING | ULTIMATE DEPTH

ELEVATION | DIP | PROPOSED DEPTH

DEPTH FEET	CORE RECOV	DESCRIPTION	CORE SAMPLE NO.	FOOTAGE	CORE ASSAYS AG.	CU.	PB.	ZN.	SLUDGE SAMPLE NO.	FOOTAGE	SLUDGE ASSAYS AG.	CU.	PB.	ZN.
418.0 - 428.0	9.1	Grey, fine-grained carbonate laminated with dark brown bands in which there is some fine biotite. The bands are contorted in part but average about 70° to core. The rock is possibly a partially re-crystallized impure limestone.												
		End of hole at 428.0												
		Average Recovery: 72.6%												
		Size of Core: AX (1 3/16")												

-missing page 2

DIAMOND DRILL RECORD,

HOLE NO. 131

PROPERTY Vangorda Creek Y.T.

SHEET NUMBER 1 | SECTION FROM 0.0 TO 73.0 | STARTED June 23, 1955

LATITUDE 26,171.85 | DATUM 4000 | COMPLETED June 28, 1955

DEPARTURE 36,857.27 | BEARING Vertical hole | ULTIMATE DEPTH 428.0

ELEVATION 4,086.43 | DIP | PROPOSED DEPTH To test above area of iron oxide & pyrrhotite

DEPTH FEET	CORE RECOV	DESCRIPTION	CORE SAMPLE NO.	FOOTAGE	CORE ASSAYS AG.	CU.	PB.	ZN.	SLUDGE SAMPLE NO.	FOOTAGE	SLUDGE ASSAYS AG.	CU.	PB.	ZN.
0.0-		Casing (broken bedrock, qtz-												
3.0(?)		feldspar porphyry)												
20-	28.6	Quartz-feldspar porphyry.												
41.6		Anhedral quartz eyes up to 1/8"												
		diameter and subhedral white												
		feldspar up to 1/4" diameter.												
		Considerable iron oxide stain												
		from 3.0 to 17.3, the porphyry												
		having a partially leached												
		appearance.												
41.6-	17.7	Granulated graphitic schist												
130		containing numerous threads and												
		small patches of white quartz.												
		A little pyrite between 50.0 and												
		51.0. An inclusion of greenish-grey												
		schist from 530 to 550.												

...OND DRILL RECORD,

HOLE NO. 131

PROPERTY Vangorda Creek Y.T.

NUMBER 3 | SECTION FROM 418.0 TO 428.0 | STARTED

LATITUDE | DATUM End | COMPLETED

DEPARTURE | BEARING | ULTIMATE DEPTH

ELEVATION | DIP | PROPOSED DEPTH

DEPTH FEET	CORE RECOV	DESCRIPTION	CORE SAMPLE NO.	FOOTAGE	CORE ASSAYS AG.	CU.	PB.	ZN.	SLUDGE SAMPLE NO.	FOOTAGE	SLUDGE ASSAYS AG.	CU.	PB.	ZN.
418.0-428.0	7.1	Grey, fine-grained carbonate laminated with dark brown bands in which there is some fine biotite. The bands are contorted in part but average about 70° to core. The rock is possibly a partially re-crystallized impure limestone.												
		End of hole at 428.0												
		Average Recovery: 72.6%												
		Size of Core: AX (1 3/16")												

CYPRUS ANVIL MINING CORPORATION Page 1 of ____

DIAMOND DRILL CORE LOG Date: ____

Hole Number: P55V159

Reference Fabric Orientation Diagram:

Project: Vangorda Plateau remap

Location: ____

Claim: ____

Terr.Plane Co-ords.: 6903089.706 N

conversion of KA metric coords

593889.5449 E

Grid Co-ords: ____

Elevation: 1128.7598 metres KA elev -10.61m.

All symmetry determinations looking

Total Depth: 851.0 feet = 259.4 metres NW with 52 dipping

Inclination: -90° SW with dip azimuth ____.

Purpose: to test flank of

Reason hole Terminated: ____

Logged by: GAS/LCP Date(s) Logged: August 12/1984

Drilling Contractor: ____

Size	CORE From	To
Casing	0.0	____
AX	____	851 feet
____	____	____

Collar Cased and Capped: ____

Hole Cemented: ____

Steel down hole: ____

Started: August 15/55 Completed: Sept 10/55

Cyprus Anvil Mining Corp. Page 2 of _____

DDH P55V1159 (2–8)

Diamond Drill Core Log Date: _____ Logged By: _____

Code	Drillhole	Elevation	Northing	Easting	Units (feet/metres)	R.F.E.	
	1 2 8	10 16	17 24	25 32	34 39	41 42	
T	P55V1159	1128.8	9030891.7	593899.5		52	

Feet

Code	Drillhole	Depth	Zenith Angle	True Azimuth	Comments
	1 2 8	10 14	22 26	28 32	34 56
R	P55V1159	00	180.0	000.0	AT COLLAR
R	P55V1159	851.0	159.0	059.0	AZIMUTH TAKEN FROM
R			.	.	DDH 79VX01
R			.	.	
R			.	.	PROBABLY ACID TEST
R			.	.	
R			.	.	
R			.	.

Feet

DDH V.1.59

Cyprus Anvil Mining Corp.

Lithologic Log

Date: Aug 12/84 Logged By: GAS/LCC

Code	From	To	Recov.	No.	Unit	Description
	10 14	16 20	22 24	26 28	30 34	35
L	10 0			1	#1	O/B ~10' overburden
L	12 3 10			2	5B1210	(5B0) (5B6) 50: 40:10
						Thickly interbanded, med grey & dk grey, calc. phyllite w/ short sections of normal phyllite CS2 f/td., mod. soft to mod. hrd. S2 foliation med. to dk grey. For much of unit S2 often parallel core axis. V. brkn. much core loss & reground core. Suspect in major fault zone. Lower contact ± 10' because lack of legible footage tags — halfway thru 2nd box. Change to "solid" dk grey from interbanded grey & dk grey
L	31019 0			3	5A1611	Borderline 9minor → (5A3 calc-silicate minor)
						Dk grey to blk, med. hrd to locally hrd, gen PS2 f/td to microlithoned, banded noncalc. phyllite. Intervals of 20cm of dk grey to black, med. lithoned calc phyll. Short sections w/ good dk grey, med grey striping, hand — resembling 5A619. Sulphides py > po diss along S2 in qtz lenses & cross-cutting features. No good 4A type qtz-sulph. bands. Minor 5D tuff bands - thin. Total sulphides in 1% range. Calc-sil. for green mineral in calc bands. Short sections convincing for 5A169 — others are not.
L	31670			4	5B1810	Bio (5C37)
						Med grey green, calc, gen PS2 f/td, mod soft chloritic phyllite. Brn tinge on cut surface due to bio. Includes short metabasite sections although dominantly green sheared phyllite. Metabasite 357-361. About 312-317 also metabasite. 5D → 5C leopard rocks.

C.A.M.C. 1981 - E - 3A

DDH V159 (2–8)

Cyprus Anvil Mining Corp.
Lithologic Log

Page 4 of

Date: Aug 12/84 Logged By: GAJ/LLP

5BO calc silicaty bio ±.3 (5DO)

Code	From	To	Recov.	No.	Unit	Description
L		4220		5		Med to dk med. greenish grey, calc, generally PS2 fltd phyllite. Local lithons. Brnish cast on cut surface bio ass. w/ calcareous bands Int. 398-403 v. calcareous & has bands to nodules of blk chert 5DO band 415-416.
L		4390		6	5BBO	± bio minor Mod. soft, med. to light green, largely PS2 fltd, locally lithoned, chlorite-musc. calc. phyll. S2 folia silvery green. Slight brnish tinge locally — because of biotite
L		4530		7	5C3	Med. green & white speckled, mod. foliated, calc. metabasite. First 2' 5D & 5C pseudo leopard rock. Bulk of unit foliated but not laminated. Relict igneous texture present.
L	4530	5770		8		NO CORE
L	5770	6170		9	5BO	calc-silicaty bio Med. grey, lithoned to PS2 fltd calc. phyllite Lithons contain granular qtz-calc-green mineral (chlorite/actin)-bio separated by grey soft, fine-grained phyllitic bands. S2 folia med grey, steely grey Core mod. soft to mod. hrd. Same unit as seen in DDH 80-VX-01
		6630		10	5B20	calc silicaty Med to dk grey, well lithoned, calc phyllite. Mod. soft to mod. hrd. Lithons calc-qtz-green mineral separated by dk grey to dk bluish grey, noncalc phyllitic bands. Similar to last unit - phyllite darker grey & biotite less evident. Only 30% core present. S2 folia dark grey w/ flat cast iron lustre.

C.A.M.C. 1981 - E - 3A

DDH V-159

Cyprus Anvil Mining Corp.
Lithologic Log

Date: Aug 12/84 Logged By: GAS/LCP

Code	From	To	Recov.	No.	Unit	Description
	10 14	16 20	22 24	26 28	30 34	35
L		758 0		111	5B19	calc-silicaty bio.
						Med. grey, calc phyllite. Well lithoned - locally PS2 fld. Band/lithons calc-qtz-green-biotite. Core about 70% present.
L		798 0		112	5B614	bio ± bxa
						Rel. hard, med greenish grey to brn tinged, gen. noncalc, heavily crackle veined, altered looking phyll. interleaved w/ intervals heavily sheared fault rock. Extensive network calc and/or chloride veinlets. Rock gen. noncalc — possible calcite has moved into veinlets. Intuitive feeling this is same rock 5B0 calc-silicaty bio which has been weaved up near fault zone. Short sections w/ other blood red 777-781 & 796-798.
						Red along fractures — some dolomite in crackle veinlets. More heavily veined. Interval reminisc. of fault zone w/ dolomite noted in 80-UX-01.
						locally crackle breccias so intense has actual brecc w/ chlorite-carbonate matrix.
						Fault related rock. — About 1½' at 788 has shearing at 15-20° core axis.
L		805 0		113	5A1	BXA
						Dk grey to blk., heavily sheared, carbonaceous fault bxa. Resembles Dy 5A+
						Augen/clasts of qtz & calcite in scaly, sheared, micaceous matrix. Shearing at 10° core axis
L		811 0		114	5B61	BXA
						Rusty orange to brick-red weathering, noncalc, possibly dolo or ankeritic sheared fault rock. Med. grey version of above unit. Shearing 20-30° C.A.
						Similar to sections of Unit #12 (— -798)

DDH V159

Cyprus Anvil Mining Corp.
Lithologic Log

Page 6 of

Date: Aug 12/84 Logged By: GAJ/ICP

Code	From	To	Recov.	No.	Unit	Description
L		8510		115	5B0	calc-silicaty ± bio
						Mod. hrd to med. soft, med. greenish grey w/ local brn tinge, slightly calc, gen. PS2 fltd phyllite.
						EOH
						All in Vangorda Fm — too short.
						Starts in basal Vangorda & drill goes up section.
						All the calcareous phyllite has already gone to mm grade of calc-silicate transition shown in 80-VX-01

C.A.M.C. 1981 - E - 3A

DDH V159 (2–8)

Cyprus Anvil Mining Corp.

Structural Log

Page 7 of

Date: Aug 12/84 Logged By: GAJ/LLP

Code	From	To	Feature	Sym	S_0 Dip Direct.	S_1 Dip Direct.	S_2 Dip Direct	Description
1	10–14	16–20	22–24	26	28–32	34–38	40–44	
S			CS2				10	Top of hole
S		1950	CS2				05	→ PS2
S		1800	CS2				01	→ PS2
S		2100	CS2				10	→ PS2
S		2200	CS2				10	→ PS2
S		2560	CS2				50	→ PS2
S		2740	PS2				70	CSn 10/340
S		2770	/					L2 // Crenulations = CSn
								120° clockwise from S2
								low point
S		3040	PS2				70	
S		3190	PS2				63	
S		3700	PS2				70	→ CS2
S		3900	PS2				80	→ CS2
S		4170	PS2				80	→ CS2
S		5780	CS2	D			70	
S		6020	CS2				65	
S		6250	CS2				63	
S		6520	CS2				60	
S		6940	CS2				75	→ PS2
S		7120	PS2				70	→ CS2
S		7390	PS2				75	
S		7910	PS2				62	
S		8140	PS2				65	
S		8420	PS2				67	
								EOH

DIAMOND DRILL RECORD,

HOLE NO. 159

PROPERTY Vangorda Creek Y.T.

SHEET NUMBER [illegible] SECTION FROM 0.0 TO 303.0 STARTED August 15, 1955

LATITUDE 29,000.26 8839.2792 DATUM 4000 COMPLETED Sept. 10, 1955

DEPARTURE 30,000.64 9144.1951 BEARING ULTIMATE DEPTH 851.0

ELEVATION 3,996.09 1139.3698 DIP Vertical at collar; 69° at 851 (bottom) PROPOSED DEPTH To test flank of main zone

DEPTH FEET	CORE RECOV	DESCRIPTION	CORE SAMPLE NO.	FOOTAGE	CORE ASSAYS AG.	CU.	PB.	ZN.	SLUDGE SAMPLE NO.	FOOTAGE	SLUDGE ASSAYS AG.	CU.	PB.	ZN.
0.0		Casing (Calcite [illegible]) 0-111												
111.0														
111.0	38.2	Graphitic schist. Core badly												
248.0		broken and [illegible] schistosity at												
		5° to 10° to core. Scattered												
		threads of [illegible] and												
	G	small patches of white quartz.												
	±K	Some sections [illegible]												
		little interbanded [illegible]. This												
		portion of the hole [illegible]												
		the strongest alteration and												
		deformation in the graphitic												
		schist.												
[illegible]	44.2	Graphitic schist and finely												
[illegible]		interbanded silica. Shearing												
	G	at 70° to core.												

DIAMOND DRILL RECORD,

HOLE NO. 159

PROPERTY Vangorda Creek Y.T.

SHEET NUMBER 2 | SECTION FROM 303.0 TO 422.3 | STARTED

LATITUDE | DATUM | COMPLETED

DEPARTURE | BEARING | ULTIMATE DEPTH

ELEVATION | DIP | PROPOSED DEPTH

DEPTH FEET	CORE RECOV	DESCRIPTION	CORE SAMPLE NO.	FOOTAGE	CORE ASSAYS AG.	CU.	PB.	ZN.	SLUDGE SAMPLE NO.	FOOTAGE	SLUDGE ASSAYS AG.	CU.	PB.	ZN.
30[illegible] 311.7	29.8	[illegible]												
	S	[illegible]												
		[illegible]												
		[illegible]												
		[illegible]												
		[illegible]												
		[illegible]												
		[illegible]												
		[illegible]												
311.7 [illegible]	55.1	[illegible]												
	G	[illegible]												
		[illegible]												
		[illegible]												
		[illegible]												
		[illegible] at 80° to core.												

DIAMOND DRILL RECORD,

HOLE NO. 159

PROPERTY [illegible] Creek Y.T.

SHEET NUMBER 3 | SECTION FROM 422.3 TO 524.6 | STARTED

LATITUDE | DATUM | COMPLETED

DEPARTURE | BEARING | ULTIMATE DEPTH

ELEVATION | DIP | PROPOSED DEPTH

DEPTH FEET	CORE RECOV	DESCRIPTION	CORE SAMPLE NO.	FOOTAGE	CORE ASSAYS AG.	CU.	PB.	ZN.	SLUDGE SAMPLE NO.	FOOTAGE	SLUDGE ASSAYS AG.	CU.	PB.	ZN.
422.3-	24.9	[illegible]												
[illegible]		[illegible]												
	SC K	[illegible]												
[illegible]	20.9	[illegible]												
[illegible]		[illegible]												
	CC	[illegible]												
	[illegible]	[illegible]												
		[illegible]												
		[illegible]												
		[illegible]												
19[illegible]	20.9	[illegible]												
[illegible]		[illegible]												
	CC	[illegible]												
	K	[illegible]												

DIAMOND DRILL RECORD.

HOLE NO. 159

PROPERTY Wagner Creek Y.T.

SHEET NUMBER 4 SECTION FROM 5240 E TO 5440 STARTED

LATITUDE DATUM COMPLETED

DEPARTURE BEARING ULTIMATE DEPTH

ELEVATION DIP PROPOSED DEPTH

DEPTH FEET	CORE RECOV	DESCRIPTION	CORE SAMPLE NO.	FOOTAGE	CORE ASSAYS AG.	CU.	PB.	ZN.	SLUDGE SAMPLE NO.	FOOTAGE	SLUDGE ASSAYS AG.	CU.	PB.	ZN.
5240-5242	80%	Dark [illegible]												
5242		Basalt [illegible]												
	100%	[illegible]												
		[illegible]												
		carbonate [illegible]												
		[illegible]												
		[illegible]												
		[illegible]												
		[illegible]												
		[illegible]												
5290-5293	90%	Complete [illegible]												
5293		[illegible]												
		[illegible]												
		[illegible]												
		[illegible]												
		[illegible]												
		[illegible]												
		but [illegible] with												

one [illegible] filling.

DIAMOND DRILL RECORD,

HOLE NO. 159

PROPERTY Vangorda Creek Y.T.

SHEET NUMBER 5

SECTION FROM 1770 TO 0080

STARTED

LATITUDE

DATUM

COMPLETED

DEPARTURE

BEARING

ULTIMATE DEPTH

ELEVATION

DIP

PROPOSED DEPTH

DEPTH FEET	CORE RECOV	DESCRIPTION	CORE SAMPLE NO.	FOOTAGE	CORE ASSAYS AG.	CU.	PB.	ZN.	SLUDGE SAMPLE NO.	FOOTAGE	SLUDGE ASSAYS AG.	CU.	PB.	ZN.
[illegible]	64.8	Dark [illegible]												
[illegible]		schist [illegible]												
		shaly [illegible]												
	[illegible]	[illegible] schist.												
		[illegible]												
		[illegible]												
		[illegible]												
		[illegible]												
[illegible]	40.9	[illegible]												
[illegible]		[illegible]												
	K	[illegible]												
		[illegible]												
		[illegible]												
		[illegible]												
[illegible]	9.7	[illegible]												
[illegible]		[illegible]												

of an intense shear zone.

DIAMOND DRILL RECORD,

HOLE NO. 159

PROPERTY Vanguard Creek YT.

SHEET NUMBER 6 | SECTION FROM 808.0 TO 851.0 | STARTED

LATITUDE | DATUM End. | COMPLETED

DEPARTURE | BEARING — | ULTIMATE DEPTH

ELEVATION | DIP | PROPOSED DEPTH

DEPTH FEET	CORE RECOV	DESCRIPTION	CORE SAMPLE NO.	FOOTAGE	CORE ASSAYS AG.	CU.	PB.	ZN.	SLUDGE SAMPLE NO.	FOOTAGE	SLUDGE ASSAYS AG.	CU.	PB.	ZN.
808.0	80.0	Dark gray [illegible]												
851.0		argillite [illegible] at [illegible]												
		[illegible] ?)												
		at 30° to [illegible]												
		[illegible]												
		[illegible]												
		[illegible]												
		End of hole at 851.0												
		Average [illegible] 71.0%												
		[illegible]												
		Reduction due to caving												
		at bedrock.												
		[illegible] between												
		2210 and 1310 [illegible]												
		points to fault or shear zone												
		over this section.												

CYPRUS ANVIL MINING CORPORATION

DIAMOND DRILL CORE LOG

Hole Number: CNR 76-01

Fabric Orientation Diagram:

Project: Vangorda Plateau re-mapping

Location: _____

Claim: Rocky 8

Terr. Plane Co-ords.: 6902122.0 N

5949470 E

} measured from 1:5000 scale 1979 orthophoto

Grid Co-ords.: 8S / 52E

_____

All symmetry determinations looking

_____ with _____ dipping

Elevation: 1133 metres

_____ with dip azimuth _____.

Total Depth: 1396 feet

Purpose: _____

Logged by: _____ Date(s) Logged: _____

Drilling Contractor: _____ Core: Size From To Collar Cased and Capped: ____

_____ _____ _____

_____ _____ _____

_____ _____ _____

Started: July 7, 1976 Completed: July 18, 1976

Cyprus Anvil Mining Corp. Page 2 of 21

DDH C.N.R.7.6.0.1 (2–8)

Diamond Drill Core Log Date: _____ Logged By: _____

Code	Drillhole (2–8)	Elevation (10–16)	Northing (17–24)	Easting (25–32)	Units (feet/metres) (34–39)	R.F.E. (41–42)	
1							
T	C.N.R.7.6.0.1						

Code	Drillhole (2–8)	Depth (10–14)	Zenith Angle (22–26)	True Azimuth (28–32)	Comments (34–56)
1					
R	C.N.R.7.6.0.1	0	180.0	0.0	AT COLLAR
			.	.	
			.	.	
			.	.

FEET

DDH C.N.R.7.6.0.1 (2 8)

Cyprus Anvil Mining Corp.
Lithologic Log

Date: June 30/84 Logged By: GAS/LCP

	Code	From	To	Recov.	No.	Unit	Description
	1	10 14	16 20	22 24	26 28	30 34	35
12.2	L	100	1410		101	##	Overburden — No core
25.9	L	1410	1815		102	3G8	± 0
							Medium greenish grey, thinly, persavively PSz foliated Phyllite. Strong silvery-greenish-grey sheen on Sz. Local paper thin carbonaceous Sz folia. Short intervals of dk med grey Noncalcareous
							Mod. broken & oxidized above 54' 40-54' 50% recov / 54-69 mod. broken to poker chippy 60% recov / 58-60 chips - Taken recovery / 69-85 mod broken - local poker chip
26.2	L	1815	1816		103	5TC*	Leopard rock
							Typical green & white anastamosing folia. Margins of 5D-type — mainly at bottom. 3C & 3B
31.2	L	1816	11012 5		104	3G8	(38?) Minor
							as above (Unit #2 40-85)
							Moderately broken - no major faults - recov OK
32.3	L	11025	11016		105	3C*	
							as above (Unit #03 85-86)
							Doesn't fizz in 20% HCl
							Mod. to strongly brken - locally crumbly - lithology related
40.2	L	1196	1320		106	3G8	± 0
							Similar to Unit #2 (40-85 feet) Largely med greenish grey, noncalc. phyllite w/ wk lithon texture. Generally PSz foliated.

C.A.M.C. 1981 - E - 3A

Mod. broken. recovery OK

Sections & bands of dk grey along folia. Quite soft - Minor more granular greenish bands. Not silty overall — just noncarbonaceous.

Fine disem. po/minor spy possibly py on flks. Po as flat blebs on Sz

DDH C.N.R.7.6.0.1 (2 — 8)

Cyprus Anvil Mining Corp.
Lithologic Log

Date: 6/30/84 Logged By: GAS / LCP

	Code	From	To	Recov.	No.	Unit	Description
	1	10 14	16 20	22 24	26 28	30 34	35
54.1	L	132	177.6		7	3G8	±4 calc-silicate str - minor
							Intact Recov OK / Unit contains ~ 5% 1-4mm thick qtz-actinolite ± gp ± cc (+ more than -) bands // S_2 & S_1. These define microlithons. Overall appearance similar 3G "stringer" but don't know if bed or stringer or veinlet Definitely po-cpy-py in stringers dominantly po. Str. have gran & white mottled texture w/ green selvage. Some cc & some flesh-colored carbonate in stringers Better lithons than last unit
54.7	L	177.6	179.4		08	3G4	stringer
							qtz-po-act (chlor?) stringers forming good lithons light colored versions of last unit 5% po total. Traces of cpy. locally carbonated Intact
60.0	L	179.4	197.0		09	3G8	±4 calc-silicate str - minor
							intact / 100% recov. Same as Unit #7 (132 - 177.6) Fewer lithons - fewer veins
62.3	L	197.0	210.43		10	3G4B	calc-silicate str (3B3 bio) 64:40
							Phyllites as above (#09 179.4 - 197) only look more altered. Interlayered w/ lesser 3B.
							Intact to locally mod. broken No faults 100%
64.6	L	210.43	212.0		11	3G4	±8
							light colored, some stringers which are calc-silicate Non calcareous. Brownish rusty weathering suggestive of carbonate - locally flesh color. - but no fizz even w/ 20% HCl 210-212 mod. broken w/ trace of gouge.
							Otherwise intact

DDH C.N.R.7.6.01 (2 / 8)

Cyprus Anvil Mining Corp.
Lithologic Log

Date: 6/30/84 Logged By: GAJ / LCP

	Code	From	To	Recov.	No.	Unit	Description
	1	10 14	16 20	22 24	26 28	30 34	35
65.1	L	12112 0	12135		112	3B3	
							Intact. No bio. noted. Contains nice S_2 minor fold couplet
67.8	L	12135	12225		113	3G4	±8 ± stringer
							Qtz-po ± act? stringers forming lithons locally rusty-brown weathering similar to Unit #11 ( ). Few % po in str. up to 1cm thick - most are ~ few cm. Intact for a couple incip micro-gouges
68.4	L	12225	12245		114	3B3	± Bio
							Intact
76.3	L	12245	25103		115	3G8	± 4 ± stringer
							Several % po-qtz-act ± cpy stringers ± some carbonates. 1mm-2cm thick // S_2 folded into D_2 folds locally. Overall po content of 5% to interval 229.5-247. Last 4' is sulphide-poor. Mob. of po into cross-cutting fractures
							Intact 100% recovery. At Dy LCP would have called this a 4L7 ±6 lithology - note for comparison to Dy logging. Fltn surfaces are med. grey. Some have slight greenish cast
99.4	L	25103	32160		116	3G9	± 0.
							Slightly darker grey than normal 3G. Top ½ darker than bottom ½. Unit has poorly developed lithons — green mafic granules bands similar to above units - bands not as abundant. Unit contains first noted disseminated po porphyroblasts in DDH. Abrupt alteration change @ upper contact — no fault evidence. At 253' 6" of possible 3E *
							Top → 268 intact 100% recov. / 268-280 mod. brkn minor local gouge 2ft core loss 277-280 (30%) / 280-292 mod. broken recov. OK / 292-322 intact to mod. broken / 322-326 mod. broken 6" recov. no gouge

lower contact arbitrary & very gradational — hence much B.S.

DDH C.N.R.7.6.0.1
2 8

Cyprus Anvil Mining Corp.
Lithologic Log

Date: June 30/84 Logged By: GAJ/LCP

	Code	From	To	Recov.	No.	Unit	Description
	1	10 14	16 20	22 24	26 28	30 34	35
125.0	L	3260	4102		17	3G0	
							Mica rich, mod. soft., med to dk med grey, noncalc. phyllite.
							PS_2 flted. $\parallel S_2$ are 1-10mm thick dker carbonaceous bands &
							lighter siliceous bands. Minor lithons only locally
							S_2 cut by later cren. cluge — steeper — locally well enough developed
							by pressure soln to show carbonaceous banding.
							Photo at end of unit
							Minor small po pseudomorphing py
							Intact local zones thick poker chips - minor insig gouge lumps - recov A-OK
							Smooth core surface - indicates micaceous w/o interbanding.
							Would make a good Typo box for 3G0
126.5	L	4102	4150		18	10Q0	
							Minor chlor, cc, orange-weathering dolomite Intact
144.8	L	4150	4750		19	3G0	
							As above. Excellent planar PS2 Unit very thinly comp
							layered $\parallel S_2$ due to mm. segregation/pressure soln striping
							Homog on large scale but inhom on small scale. Intact - good recov.
							Cut by post D2 cren. cluge. Last 4' mod. brken w/ traces
							IND gouge + 1ft core loss
145.3	L	4750	4768		20	3G8	
							Same as 3G0 phyllites only green. Mod. brken

DDH C.N.R.7.6.0.1
2 8

Cyprus Anvil Mining Corp.
Lithologic Log

Date: June 30/84 Logged By: GAJ/LCP

	Code	From	To	Recov.	No.	Unit	Description
	1	10 14	16 20	22 24	26 28	30 34	35
150.6	L	4768	4940		21	3G0	
							As above. From T.O.I → 485 vrly brkn poker chippy - minor gouge. Otherwise intact
155.8	L	4940	5110		22	3G9	
							Dk grey to black phyllite - won't smudge fingers. Fair amt of qtz veinlets w/ po & cpy. Not hard. Noncalcareous. TOI-501 mod. brkn to rubbly locally, mod. Inc gouge / 501-511 - intact. Lower contact gradational.
205.7	L	5110	6750		23	3G0	(3G9) 90:10
							3G9 as several 2'-4' zones dominantly in lower ½
							Below 633 very sparse calc-silicate - act + cc + qtz bands.
							Above 535 unit has green interbands (few %).
							Otherwise normal grey 3G0. Po porphyroblasts.
							Locally contains small black chert nodules elongate in S_2.
							Commonly see cren. cluge cross-cutting S_2.
							Good photo chances.
							Intact to mod. brken. Minor incip gouge. Recov good.
210.3	L	6750	6900		24	3E3	→ 3F9 locally [3G39] ← changed from this on re-examining
							Variably calcareous, dk to black phyllite. Fair number of qtz veins. Will not smudge fingers. borderline to 3E3. About 25% very calcareous approaching 3F9. Reminiscent of extensive dk calcareous intervals under Champ & deep holes under NW Grum extension. Darker than enclosing phyllites. Fine po & py

On re-look did not change to 3E

C.A.M.C. 1981 - E - 3A

Intact to locally rubbly/minor incip gouge / top of unit gouge zone. - small fault 60° C.A.

DDH CNR76.01 (2 — 8)

Cyprus Anvil Mining Corp.
Lithologic Log

Date: 06/30/84 Logged By: GAJ/LCP

	Code	From	To	Recov.	No.	Unit	Description
	1	10 14	16 20	22 24	26 28	30 34	35
215.5	L	69100	71070		125	3E01	±0 ±3 very minor (3G9) [3G9 ±0 ±3 v. minor] changed from this on re-look Intact – local minor rubble / recov fine. Minor qtz-cc-act. bands forming local lithons
228.1		71070	74185		126	3G01	±9 minor Again minor calc-silicate bands qtz-act esp near bottom 10' Intact TOI → 711 / 711-713 brkn, rubbly, minor gouge good recov / 713-723 Intact / 723-735 brkn, redrilled core, 2' recovered for whole interval. No gouge 735 – EOI Intact
232.6	L	74185	76130		127	3E01	±3 [3G9 ±3] changed from this on re-look Again dark grey to black but won't smudge fingers Minor qtz-act ± cc bands Sulphide bands py-cpy ± spy minor Not as much calc-sil. as previous unit Much darker than prev. unit Intact – local rubble – no sign fault
240.6	L	76130	78995		128	3E13	→ 3F9 [3G39] – changed from this on re-look Similar to Unit # 24 Similar calc-silicate bands $1\frac{1}{2}$, $\frac{1}{2}$ lithons. Cc both in lighter granular bands + distributed through rock. Below 781 are several short intervals of 3F9 Interval compares favorably to deep holes @ Greens NW extension. Intact to mod. brken Rubbly @ 784-786

DDH C.N.R.7.6.0.1 (2 — 8)

Cyprus Anvil Mining Corp.
Lithologic Log

Date: 06/30/84 Logged By: GAS/LCP

	Code	From	To	Recov.	No.	Unit	Description
	1	10 14	16 20	22 24	26 28	30 34	35
241.8	L	7189.5	7933		129	3E01	± 3 ± calc-silicate (qtz-act) [369 ± 3] 1-2% py > po sulphides Py dominant esp. below ~ 811' Intact to mod. broken good recov Patchily calc dk grey – black phyllite locally developed calc-silicate bands
252.7	L	8216.0	8219		133	3E113	± sphal [369 13] Siliceous – removes metal. Dk grey to black Similar texture to previous unit Trace sphalerite in a qtzose band Intact
255.6	L	8219.0	8318.7		134	3E01	± 1 gouge & rubble Where intact flt'n is anastamosing flt'n akin to sheared rocks of fault zones — but not as severe as SA* (Dy) & Tie fault (GRVM) Uncertain if major fault – probably not hanging contact 65° C.A. (// S_2?) Recovery 60-70%
244.7		7933	8192.0		130	3G91	± 0 (100) (90-10) Similar to Unit # 29 (789.5-793.3) only not as much carbon. Generally darker than 360 Still contains lithons w/ dk grey act? – qtz in S_2 flt'n.
251.8		8101.2	8216.0		131	3E01	± 3 ± calc-silicate ± 6 (Py) [369 ± 3 ± 6(py)] last year GAS would have called it 369

DDH C.N.R.7.6.01 (2 — 8)

Cyprus Anvil Mining Corp.
Lithologic Log

Date: 06/30/84 Logged By: GAJ/LCP

	Code	From	To	Recov.	No.	Unit	Description
	1	10 14	16 20	22 24	26 28	30 34	35
260.2	L	8387	8536		35	3C6	po (3C4*) (3G9 → 3G8 adj to 3C6) 60:20:20 Med. green chloritic phyll w/ small dissem. po. Noncalcareous Generally homogeneous Does not break w/ smooth S_2 surface Fine mottled texture. Not typical 5C. Fine-grained Might be called 5D. Intact
261.8	L	8536	8590		36	3E0	± 3 Intact mod. broken
264.1	L	8590	8666		37	3C6	po ± 3 po. v. minor Same as Unit # 35 (838.7 – 853.6) Intact
266.1	L	8666	8730		38	3G9	Not as dark as Unit # 36 (853.6 – 859.0) Noncalcareous Minor greenish calc-silicatey bands / Traces of pyrite Intact
279.7	L	8730	9176		39	3G0	locally some thin green bands containing qtz-actinolite which have been called calc-silicatey bands up the hole. Probably derived from siltstones 3G0 Intact Similar to 3G0 up hole but greater proportion of slightly harder siltstone bands. Minor hard green/brown calc-silicate bands – strongly brown & green bands occur only locally Intact

DDH CNR76.01 (2 / 8)

Cyprus Anvil Mining Corp.
Lithologic Log

Date: 06/30/84 Logged By: GAN/LCP

	Code	From	To	Recov.	No.	Unit	Description
		10 14	16 20	22 24	26 28	30 34	35
283.3	L	917.6	929.5		140	3DB	(360 calc-sil siltstone bands) 70:30
							Dominant unit is hard, interbanded 1/3 biot purple & 2/3 dk green actinolite Generally noncalcareous bands 1-3 cm thick.
							Has a calc-silicate look (hence the name)
							Biotite bands not always regular - interfingue w/ dk. green
							bands pale cream bands typical of Vangorda calc-silicates
							Contains dk green-blue amphibole typical of Faro amphibolite facies calc-silicate
							Intact - good recovery
							In 360 calc-sil. ss. bands are 25%
292.8	L	929.5	961.0		141	360	green. calc-silicate siltstone bands (3DB) minor 95:05
							36 has 20-30% granular siltstone bands. Thin bands
							// S_2 1mm - 10mm thick.
							3DB bands are several isolated occurrences 10 cm thick -
							remove metal from nail - very hard.
							Intact to locally moderately rubbly
293.1	L	961.0	961.5		142	3DB	
							as above Unit #40 (917.6-929.5)
							Mod. hard / intact
							Interbanded dk blue green amphibole & biotite. Interfingering of the
							two types of layers. Biotite 1/3 / green amphibole 2/3
							Noncalcareous

C.A.M.C. 1981 - E - 3A

DDH CNR7601 (2 8)

Cyprus Anvil Mining Corp.
Lithologic Log

Date: 06/30/84 Logged By: GAJ/LCP

	Code	From	To	Recov.	No.	Unit	Description
297.2		9615	9750		43	3GD	w/ green siltstone bands (calc-silicate) ±9 ±bio
							Some minor carbonaceous dk grey interbands.
							Locally some bio
							Lower contact gradational Intact
299.5	L	9750	9827		44	3G	rich in green siltstones
							Don't really have a classification for this.
							Micaceous chloritic phyllite w/ disseminated small bio
							porphyroblasts. Strongly crenulated.
							Minor po as thin blebs along S_2 Bio oriented along S_2
							Intact except minor incip gouge & poker chipping in middle (979-980.5)
							Overall pale green color.
							Nonculcareous. Minor PS2 striping in shades of grey & green
301.7	L	9827	9897		45	3DB	
							Dark green & brown dominantly / contains minor pale creamy calc-silicates in thin discontin laminae
							Slightly calcareous w/ brn bio bands brn biot 20% / green amphib 80% / creamy-trace
303.8	L	9897	9968		46	3G	green silty-rich
							Same as Unit # 44 (975.0-982.7)
							po and py forming blebs & laminae (respectively) along S_2
							Looks similar to metabasite logged near 850'
							Intact
306.5	L	9968	10055		47	3DB	
							Some lighter green to cream bands. Part of calc-silicated banded sequence

Looks like altered-retrograded schist just above marble in bottom of DDH456-75-14

Minor development of dk green related to fractures rather than in bands

One thin band / portion looks like 3BO

Intact Removes metal - fairly hard.

Bands up to 1-2cm thick
biot 45% creamy - 5%
green amphibole 55%

DDH CNR76.01 (2 8)

Cyprus Anvil Mining Corp.
Lithologic Log

Date: 06/30/84 Logged By: GAJ/LCP

	Code	From	To	Recov.	No.	Unit	Description
363.9	L	11110	11938		51	3F0	Light grey to off-white, med to fine calcite marble with boudinaged silicate layers. Commonly brn biotite. Locally chlorite. Silicates 25% of rock. Intact except for 1157.5 – 1166 brkn & rubbly – locally incipiently gouged. Weathered looking. Fractures at 10° C.A. Prob. not significant
366.0	L	11938	12008		52	3B	foliated [1H] Med. green chlor-act schist. Foliated. Some qtzose laminae along fltn. Minor diss. po. Greener & strong fltn makes different from 3G0 green. Color lamination in shades of green along fltn. Noncalcareous, except locally – esp. near margins. Intact
386.0	L	12008	12665		53	3F0	Intact except for 1210.8 – 1218.0 Carbonate-cemented, post-meta. bxa. Steeply dipping fault – rakes 20° Dips 10° to C.A. – This interval only mod. brken
387.6	L	12665	12718		54	3C3	foliated [1H] Contains much carbonate. Anastamosing chloritic fabric. Overall color is med to dk green. Not typical 3C. Intact

Minor green hbl. type calc-silicate

DDH CNR7601 (2 8)

Cyprus Anvil Mining Corp.
Lithologic Log

Date: 06/30/84 Logged By: GAJ/LCP

	Code	From	To	Recov.	No.	Unit	Description
	1	10 14	16 20	22 24	26 28	30 34	35
308.2	L	1010155	1011110		418	31G	green (3DB) Minor 90:10
							Some biotitic layers in the 3G / also bio as selvages on post mm. fractures
							Intact to mod. broken.
							Lower contact gradational. Same as Unit #44 (975-982.7)
321.9	L	1011110	1015160		419	3GO	calc-silicate siltstone.
							Contains thin bands of siltstone w/ calc-silicate gtz-act ± bio.
							30% this material 1-50 mm thick.
							Good 3GO grey w/ dark grey bands PS_2 foliated
							Mod. soft except where particularly green.
							Non calcareous.
							Intact — minor broken core 1041-1053.
338.6	L	1015160	1111110		550	3GT	green
							Weakly developed small bio porphyroblasts
							Non calcareous — minor small carbonate porphs.
							light to med. greenish grey, homogeneous, strongly foliated. phyllite.
							Speckled texture with light brn to cream carbonate porphs, actinolite porphs, bio porphs. Pa blebs along S_2 clvge.
							Well-developed cremulation clvge. Similar to 3G greens above in this DDH. Not fitting appropriately into our classification scheme.
							Intact
							Same as Unit #44 (975-982.7)

C.A.M.C. 1981 - E - 3A

DDH CNR7601 (2 / 8)

Cyprus Anvil Mining Corp.
Lithologic Log

Date: 06/30/84 Logged By: GAI/LCP

Code	From	To	Recov.	No.	Unit	Description
	10 14	16 20	22 24	26 28	30 34	35
423.1 L	1271 8	1388 0		555	3FD	
						Normal.
						Very calcite-rich towards end of interval
						Intact except 1356-1389 Orange weathering colors because of
						orange weathering carb on fractures & other minerals along fltn.
						Several carbonate filled fractures @ 20-25° C.A.
						Most major fracture / fault is @ 1361.5 22° C.A.
						w.r.t S_2 it is 22/330.
						Slicks rake 50° along fault surface
						EOH
						K-A log shows 1388-1396 Drilled w/ no core recovery
						EOH = 425.5

DDH C.N.R.7.6.0.1 (2–8)

Cyprus Anvil Mining Corp.
Structural Log

Date: _____ Logged By: _____

(FEET)

Code	From	To	Feature	Sym	S_0 Dip Direct.	S_1 Dip Direct.	S_2 Dip Direct	Description
1	10–14	16–20	22–24	26	28–32	34–38	40–44	
S		1411	P1S12				81 2310	
S		1710	P1S12				713 2310	
$			P1S13			515 0110	~~2310~~	S_3 Cremulation clvg
S		1713	C1S12				713 2310	
S		1912	C1S12				715 2310	
S		11011	P1S12				519 2310	
S		11115	P1S12				615 2310	
S		11218	P1S12				518 2310	
S		11317	P1S12				616 2310	
S		11416	P1S12				610 2310	
S		11515	P1S12				715 2310	
S		11610	P1S12				715 2310	
$			P1S13			210 0710	~~2310~~	
S		11715	P1S12				816 2310	
S		11810	C1S12				818 2310	
S		11912	P1S12				818	
$			C1S13			213 0410		
S		12017	P1S12				810 2310	
		12215	P1S12				712 2310	
$			C1S13			218 0310		
S		12411	P1S12				85 2310	
S		12610	P1S12				814 2310	
S		12713	P1S12				690 2310	
S		12912	P1S12				712 2310	
S		13016	P1S12				613 2310	
S		13111	P1S12				613	
$			C1S13			210 3210		
S		13313	P1S12				85 2310	
$			C1S13			310 2415		
S		13419	P1S12				715 2310	
$			C1S13			119 900		
S		13519	P1S12				814 2310	
$			C1S13			312 0915		
S		13714	P1S12				710 2310	
$			C1S13			319 900		
S		13813	P1S12				615 2310	

DDH ____ (2 – 8)

Cyprus Anvil Mining Corp.

Structural Log

Date: _____ Logged By: _____

Code	From	To	Feature	Sym	S_0 Dip Direct.	S_1 Dip Direct.	S_2 Dip Direct	Description
1	10 – 14	16 – 20	22 – 24	26	28 – 32	34 – 38	40 – 44	
$			CS3			23 3010		
S		1397	PS2				66 2310	
$			CS3			15 3410		
S		4012	PS2				72 2310	
S		4216	PS2				75 2310	
$			CS3			38 3510		
S		4412	PS2				81 2310	
$			CS3			33 1110		
S		456	PS2				82 2310	
$			CS3			40 0310		
S		4910	PS2				7A 2310	
$			CS3			3B 0010		
S		513	PS2				76 2310	
$			CS3			26 2910		
S		5214	PS2				67 2310	
$			CS3			38 9010		
S		5318	PS2				82 2310	
$			CS3			80 1140		
S		5418	PS2				80 2310	
$			CS3			30 3410		
S		5518	PS2				83 2310	
$			CS3			33 0110		
S		5618	PS2				85 2310	
$			CS3			44 2510		
S		5818	PS2				66 2310	
$			CS3			15 3410		
S		603	PS2				70 2310	
$			CS3			35 3010		2
S		623	PS2				79 2310	
$			CS3			32 0413		
S		628	PS2				81 2310	
$			CS3			27 1810		
S		6418	PS2				71 2310	
$			CS3			39 0415		
S		6613	PS2				75 2310	
$			CS3			30 0415		

DDH ____ (2 – 8)

Cyprus Anvil Mining Corp.

Structural Log

Date: _____ Logged By: _____

Code	From	To	Feature	Sym	S_0 Dip Direct.	S_1 Dip Direct.	S_2 Dip Direct	Description
1	10 – 14	16 – 20	22 – 24	26	28 – 32	34 – 38	40 – 44	
S		16910	P1S2				612310	
$			C1S3			45900		
S		17019	P1S2				614310	
S		17219	P1S2				717310	
S		17413	P1S2				415310	
$			C1S3			201120		
S		17519	P1S2				616310	
$			C1S3			201115		
S		17618	C1S2				617310	
S		17812	C1S2				612310	
S		18013	C1S2				616310	
S		18211	P1S2				710310	
S		18417	P1S2				712310	
S		18616	C1S2				716310	
S		18815	P1S2				616310	
S		18918	P1S2				712310	
S		19113	P1S2				616310	
S		19311	P1S2				713310	
$			C1S3			250510		
S		19415	P1S2				812310	
S		19610	P1S2				712310	
S		19714	C1S2				711310	
S		19814	P1S2				811310	
$			C1S3			451105		
S		19916	P1S2				714310	
$			C1S3			301610		
S		101015	C1S2				615310	
S		101210	P1S2				717310	
S		101410	P1S2				817310	
S		101517	C1S2				716310	
S		101717	P1S2				812310	
S		101910	P1S2				717310	
S		110106	P1S2				718310	
S		110210	P1S2				812310	
S		110315	P1S2				713310	
S		110418	P1S2				615310	

DDH _____ (2 – 8)

Cyprus Anvil Mining Corp.

Structural Log

Date: _____ Logged By: _____

Code	From	To	Feature	Sym	S_0 Dip Direct.	S_1 Dip Direct.	S_2 Dip Direct	Description
1	10 – 14	16 – 20	22 – 24	26	28 – 32	34 – 38	40 – 44	
S		111712	PIS12				910 2310	
$			PIS13			350 090		
S		111810	PIS12				710 2310	
S		112104	PIS12				710 2310	
S		112315	PIS12				715 2310	
S		112415	PIS12				617 2310	
S		112610	PIS12				717 2310	
S		112715	PIS12				818 2310	
S		112914	PIS12				815 2310	
S		113110	PIS12				715 2310	
S		113310	PIS12				811 2310	
$			CIS13			312 331O		
S $		113318	PIS12				814 2310	
$			CIS13			318 331O		
S		113512	PIS12				812 2310	
S		113712	PIS12				752 310	
S		113812	PIS12				716 2310	
S								

FEET

FAULT

DDH C.N.R.76.01 (2 8)

Cyprus Anvil Mining Corp.

REC Structural Log

Date: July 15/84 Logged By: LCP

Code	From	To	Feature	Sym	S_0 Dip Direct. (upper)	S_1 Dip Direct. (Middle)	S_2 Dip Direct (lower)	Description
1	10 14	16 20	22 24	26	28 32	34 38	40 44	
F	1400	1540	2B	5				mod. brken & oxidized - 50% recov
F	1540	1690	2BT	6				mod. brken / poker chippy 60% recov
F	1580	1600	NP	0				token recovery - some chips
F	1690	1025	2B					mod. brken
F	1025	1060	3B					mod. to v. brken / locally
								crumbly / lithology - related
F	1060	1320	2B					mod. brken - recov OK
F	1970	2043	1B					intact to locally mod. brken
F	2110	2120	2B					mod. brken w/ trace of gouge
F	2680	2800	2B					mod. brkn, minor local gouge
F	2770	2800	P	3				33% recovery
F	2800	2920	2B					mod. brkn - recov. OK
F	2920	3220	1B					intact to mod. brkn
F	3220	3260	2BP	1				mod. brken ½'/4' recovery
F	3260	4102	1T					intact / local thick poker
								chip zones
F	4710	4750	2B	7				mod. brkn 1' core loss
F	4750	4768	2B					mod. brken
F	4768	4850	T3B					v. brken & poker chippy
F	4940	5010	2BR					mod. brkn / local rubble
F	5110	6750	1B					intact to mod. brkn
F		6750	1G					small gouge zone 60° C.A
F	6750	6900	1R					intact to locally rubbly
F	7110	7130	BR					brken & rubbly / minor gouge
F	7230	7350	B	1				brkn / 2' recovered
F	7630	7895	1B					intact to mod. brken
F	7840	7860	R					rubbly
F	7895	7933	1B					intact to mod. brken
F	8290	8387	GR	6				gouge & rubble
/								recov 60-70 %
								lower contact 65° C.A
F	8536	8590	1B					intact to mod. brkn
F	9790	9805	1TG					poker chippy & minor incip gouge
F	10055	10110	1B					intact to mod. brkn
F	10410	10530	1B					minor brkn core
F	11575	1166	BR					brkn & rubbly

C.A.M.C. 1981 - E - 4

fractures 10°/C.A.

FEET

FAULT

DDH C.N.R.7.6.0.1 (2 / 8)

Cyprus Anvil Mining Corp.

REC

Structural Log

Date: July 15/84 Logged By: LCP

Code	From	To	Feature	Rec	S_0 Dip / Direct (upper)	S_1 Dip / Direct (middle)	S_2 Dip / Direct (lower)	Description
	10 14	16 20	22 24	26	28 32	34 38	40 44	
F	1121108	1121180	X12B					steeply dipping post-DZ bxn 10° C.A. / mod brkn
F	1131516	1131890	X1Q					carbonate-filled fractures 20°-25° core axis
F		1131611	5 FX1Q					most major fracture / fault 22° to C.A.
F	1131890	1131960	N1P1					no core recovery
								EOH

DIAMOND DRILL RECORD

LOGGED BY STANLEY B. REAMSBOTTOM

D.D.H. № 76-1 PAGE 1

PROPERTY VANGORDA MINES (Dotted by [illegible])

LATITUDE 8S STARTED JULY 7, 1976

DEPARTURE 52E COMPLETED JULY 18, 1976

ELEVATION 3710' PROPOSED DEPTH 1000+

ULTIMATE DEPTH 1396 ft.

HOLE SURVEY:

DEPTH	BEARING	DIP
0		- 90°

CLAIM № [illegible]

N

DIRECTION AND DISTANCE FROM N.E. CLAIM POST

Interval From	Interval To	DESCRIPTION	Recovery	Sample №	Interval From	Interval To	Sample Length	Assay Pb	Assay Zn	Assay Ag	Assay Au	Assay Cu	Assay x Pb	Assay x Zn	Assay x Ag
0	40 ft.	OVERBURDEN													
40	102	GREY-GREENISH QU-SERICITE-CU PHYLLITE													
		From 40-60' rock broken, rusty oxidized. Thin (0.5-2cm) qu													
		veins with po, leafy pyrite. Thin talc-ch meta volc lens at													
		85-86 feet. F_2 dominant.													
		CA: 40=F_2 80, 60=F_2 80, 80=F_2=75, 100=55°													
102	106	PALE WHITE-GREEN TALCY-CH META GREENSTONE													
		Note relict plagioclase phenoxts.													
106	172	GREY-GREENISH QU-CH-SERICITE PHYLLITE													
		Same as above. Blebs and stringer of po throughout. Thin													
		(1-3mm) veins of white cc. Some white qu-carbonate laminae.													
		Coarser po veinlets at 145-55. F_2 dominant.													
		CA: 120=78, 140=70, 160=F=70													
172	250	GRADES TO WHITER QUARTZ-SERICITE-CHLORITE PHYLLITE	95-98%												

Interval From	Interval To	DESCRIPTION	Recovery	Sample Nº	Interval From	Interval To	Sample Length	Assay Pb	Assay Zn	Assay Ag	Assay Au	Assay Cu	Assay x Pb	Assay x Zn	Assay x Ag
		Rock looks paler more bleached due to increase in qu-muscovite													
		content. Po locally 2% conc. in F_1 laminae. EX 172-182													
		contorted fold nose zone with Po laminae. Note CPY assoc													
		with Po. Note Striped purplish-green cc-bi?-Ch-Ser.													
		Calc-silicate bands 198-205; 210-213. Note stringers of													
		Sph assoc with qu-cc vein at 245'.													
		CA: 180=83 F_2 200=60, 220=70, F_1 sub-v, 240=F_1=66, F_2 79.													
		opp dip.													
250	577	DARK GREY QUARTZ-SERICITE-(Chlorite) PHYLLITE	95-99%												
		Thin striped white qu laminae alternate with dark grey													
		sericitic laminae. Ch-laminae locally abundant, often in													
		close assoc. with white qu-veins. Stringers and blebs of Po													
		throughout section. Note 493-516, thin black graphitic													
		phyllite unit. Minor cpy, py, po. White qu vein 410-416.													
		CA: 260-76, 280=74, 300=67, 320=60, 340=60, 760=F_1 65, F_2 67													
577	838	BLACK STRIPED QUARTZ-GRAPHITIC PHYLLITE	95-98%												
		Unit locally (ex 600-630) is less graphitic than normal Ch													
		is also locally present, often heavy qu-veins. Rock folded													
		net-veined by white cc between 690-670. Tiny xtals of													

LOGGED BY _____ D.D.H. NO 76-1 PAGE 4

Interval From	Interval To	DESCRIPTION	Recovery	Sample NO	Interval From	Interval To	Sample Length	Assay Pb	Assay Zn	Assay Ag	Assay Au	Assay Cu	Assay x Pb	Assay x Zn	Assay x Ag
919	930	GREEN-BROWN QU-CH-BIO PHYLLITE	98												
		Ch-rich laminae alt. with purplish-brown biotite-rich laminae.													
		Po in thin tension gashes. CA: 930=65.													
930	982	GREY GREENISH QUARTZ-SERICITE-CHLORITE PHYLLITE ± BIOTITE.	99												
		Local development of brown bio, at 942'; 960.5'													
		CA: 940=60, 960=68, 980=70.													
982	1009	GREEN BROWN QUARTZ-CHLORITE-BIOTITE PHYLLITE	98												
		Blebs, stringers of po in and transverse to foliation.													
		Quartz-chlorite veins; cc veins. CA: 1000=76.													
1009	1053	GREY-GREENISH QUARTZ-CHL-SERICITE ± BIO. PHYLLITE.													
		Rock locally quite rich in ch with some lustrous slicks.													
		Posibly meta-tuff parting. Biotite occurs sporadically													
		through unit ex. 1036 : Note above greenstone slicks quite													
		limy. CA: 1020=67, 1040=70.													
1053	1113	DARK GREEN TALC-CHL-SCHIST. META VOLCANIC OR TUFF.													
		Rock locally green zones which may have radiate fibrous													
		acti nolite (or ch after actinolite). Note also small knots													
		of white talc. Biotite occurs sporadically in unit.													

LOGGED BY _____ D.D.H. NO. 76-1 PAGE 3

Interval From	Interval To	DESCRIPTION	Recovery	Sample NO	Interval From	Interval To	Sample Length	Assay Pb	Assay Zn	Assay Ag	Assay Au	Assay Cu	Assay x Pb	Assay x Zn	Assay x Ag
		SPHALERITE in quartz-veins at 684. Note also minor biotite xtals in this zone. Blebs and stringers of po and py throughout section. Arsenopy in qu-vein at 753. Note unit richer in graphite from 740 on. Po conc. in F_1 laminae which have been folded at 772'. Py in broken-up graphitic phyllite 833-838. F_2 dominant throughout section.													
		CA: 580=F_1 33, F_2 65, 600=F_2 66; 620=F_2=70, F_3 ? 54?, 640=F_2 76, F_2 33, Note 600-640 zone with high angle strain-slip foliation. Is this F_1 or F_3? Problematic foliations. 660=F_1,F_3 45, F_1 F_2 81? 680=60, 700=F_1 folded, F_2 60°, 720=66, foldnose at 739; 760=47, F_1 F_2; 780=66, 800=75, 820=70F_2, F_1 sub-vertical.													
838	873	DARK-MED GREEN SCHISTOSE META-VOLC? GREENSTONE UNITS INTER-CALATED WITH STRIPPED GRAPHITIC PHYLLITE Note greenstone has relict po xtals altered to cc. Blebs of Po throughout. CA: 840=62, 860=70.	95-98												
873	919	GREY-GREENISH QUARTZ-SERICITE PHYLLITE Blebs, stringers of Po. Qu-ch veins. CA: 880=52, 900=85, 920=58.	98												

LOGGED BY _____ D.D.H. Nº 76-1 PAGE 6

Interval From	Interval To	DESCRIPTION	Recovery	Sample Nº	Interval From	Interval To	Sample Length	Assay Pb	Assay Zn	Assay Ag	Assay Au	Assay Cu	Assay x Pb	Assay x Zn	Assay x Ag
	1396	END OF HOLE													
		Rods-snapped 500' from bottom. Failed to retrieve them.													

Interval From	Interval To	DESCRIPTION	Recovery	Sample NO	Interval From	Interval To	Sample Length	Assay Pb	Assay Zn	Assay Ag	Assay Au	Assay Cu	Assay x Pb	Assay x Zn	Assay x Ag
		GARNET at 1099' (Alb-ep amphibolite facis?) Note F_2 folds													
		1050-1060. F_2 dominant. CA: 1060=72, 1080=65.													
1111	1388	PURPLISH-BROWN-GREEN AND WHITE STRIPPED CALC-SILICATE SCHIST													
		Irregularily banded schistose calc. Silicate composed of													
		white-cc bands (0.5 to several cms) alternating with purplish													
		brown phlogopite? mica-rich bands with associated dark-grn.													
		(emerald) chlorite and local paler green bands with xtalline													
		rosettes of tremolite-actinolite. Local pale-green xtals of													
		diopside? May also be present. Small-scale F_2 folds are													
		present but dominant structural feature in boudinaged													
		purplish-brown biotite rich layers in calcitic matrix. Rock													
		has been subjected dominantly to tensional-stress-possibly													
		way out on limb of major fold? Note pervasive dissemination													
		of pyrrhotite with less py and cpy throughout unit. Sulphide													
		also occupy late tensional fractures in association with cc-qu.													
1388	1396	NO CORE RECOVERED						Boudinage-texture common							
		CA: 1120=80, 1140=65, 1160=75-rock gouged, 1180=75, 1200=60,						throughout section. So-possibly							
		1220=85, 1240=79, 1260=85, 1280=70, 1300=85, 1320=80, 1340=66						on major fold limb.							
		1360=45, 1380=75.													

Feet

Today we need
Write in the snow
paper

DDH 79V94R
2 8

Cyprus Anvil Mining Corp.
Lithologic Log

Page 3 of

Date: Aug 26/84 Logged By: GAS/LCP

	Code	From	To	Recov.	No.	Unit	Description
	1	10 14	16 20	22 24	26 28	30 34	35
25.1	L	00	825		1	#	Overburden No core 1 piece redrilled granite
26.2	L	825	860		2	4G48	$ Minor
							Fine grained, well banded to mod banded, baritic massive sulphides. Total sulphides 60% Sphal. & galena ≈ pyrite. Remainder largely barite Some qtz Minor amt of small pinkish white dolomite clasts. Sphal reddish brown to locally honey coloured Split/orig intact Only slightly oxidized on fractures — suspect they drilled through weathered sulphides Magnetite as small blebs & large irregular lenses
26.5	L	860	868		3	5C4$	± 7
							Mod. soft, greenish tan to v. pale green, well-lithoned, noncalc, dolomitic metabasite. Poorly developed leopard rock texture. Mod broken
29.1	L	868	955		4	4G48	$ Minor ± # Minor
							Well banded baritic massive sulphides Total S= 60% Contains minor magnetite in small disc blebs & concentrated in thin bands. S= Dominantly py w/ lesser sphal & galena V. fine grained w/ bird-shot texture in base-metal rich intervals. Minor calcite in sparsely developed bands. Small diss dolomite blebs/clasts Much of sphal. reddish brn — sections of honey coloured Split, originally intact.
30.6	L	955	1005		5	4E0$	v. minor
							Fine-grained, poorly banded, massive py Minor sphal in wispy bands. Possibly minor barite Small amt. of diss. dolomite — fizzes v. faintly w/ 20% Split/originally intact

DDH 79V94R

Cyprus Anvil Mining Corp.
Lithologic Log

Date: Aug 26/84 Logged By: GAS/LCP

	Code	From	To	Recov.	No.	Unit	Description
31.1	L	1005	1019		6	4G4$	V. minor. 8 v. minor. Mod. to str banded, fine-grained, baritic massive sulphides. Total S= 60% Upper contact gradational. Sphal. reddish brown. V. minor dolomite. Split / orig intact. V. minor magnetite in bands
31.6	L	1019	1036		7	5C$	V. minor 7 borderline [4L65] Mod. hrd, PS2 fltd, noncalc, slightly dolomitic, med grey green phyllite. Possibly altered metabasite – may be altered phyllite. Interband or "intrusive" massive sulphides. This unit may well be clasts in massive sulphides. Split / orig intact. S2 folia silvery med. green
32.2	L	1036	1059		8	4J7$	Minor Mod. banded, nearly massive pyrrhotitic S= w/ diss blebs of white dolomite, possibly some calcite. Subequal po & sphal. w/ lesser py. Contains clasts of Unit # 7. Total S= 75%. Split / orig intact
32.9	L	1058	1080		9	5C4$	7 minor Mod. hard, mod. lithoned, greenish beige, qtz-chlorite-dolomite-musc phyllite. Dolo. weathers orange. Similar to Unit # 7 only this less chloritic & more dolomitic. Incipient leopard rock texture. Split
34.3	L	1080	1125		10	4H4$	28 (5C$7) 70:30 Pyrrhotitic near massive S=, containing bands rich in sphal. and bands or clasts of dolo-qtz-chlorite-qtz as Unit # 9. Clasts of white dolomite similar to dolomite lenses in last unit / also similar to dolomite clasts in unit # 2. S= contains diss sphal, py. Some Bands richer in py & magnetite. Some galena. Overall py bxa w/ clasts chlorite-dolo rock. Interval 103.6 – 112.5 Po sulphides w/ clasts/bands probable altered metabasite.

C.A.M.C. 1981 – E – 3A

Split / orig intact.

DDH 79V94R

Cyprus Anvil Mining Corp.
Lithologic Log

Date: Aug 26/84 Logged By: GAA/LCP

	Code	From	To	Recov.	No.	Unit	Description
36.3	L	1125	1190		11	4A4	
							V. thinly banded, CS2 fltd, dk grey to black, hard, ribbon banded graphitic qtzite. Total S= 15%. Subequal py sphal. S2 folia dk grey to black, med. grey at top. Noncalc, non dolomitic. Split / trashy / orig. probably OK. Bottom contact against incipient gouge - talcose. Much qtz veining adjacent S=. probably not a signif. fault.
45.0	L	1190	1475		12	5B6	[3G0] (10Q0) 80:20
							Med. grey to dk med grey, mod. soft to mod. hard, generally PS2 fltd, locally lithoned phyllite. Largely noncalc. Contains cc in lithons 124'-126'. Lithons / qtzose bands contain minor diss. green mineral ± po. Total S= 2%. Po in qtzose bands & vcutting fractures, Py in vcutting fractures. In last 10' appy as diss. subhedral rhombs & vcutting fractures. Abundant qtz veining in intervals up to 30 cm thick - may all be same qtz vein. Intact
45.6	L	1475	1495		13	5B6	2 19 → (4A0) EOI
							Noncalc, mod. hrd to hrd, locally mod. soft, dk. grey phyllite. Contains irregular streaks of py & po & sphal. along foliation & vcutting fractures & qtz veins. S2 fltn. distorted. Transitional to 4A0 at end. Split/rubbly now
45.9	L	1495	1505		14	4E4	
							Fine-grained, massive pyritic S=. Poorly banded. Lower contact sharp and not parallel S2. May be "intrusive" massive S=
50.0	L	1505	1640		15	4A0	±4
							Hard, v. thinly banded, CS2 fltd ribbon banded graph. qtzite. Black S2 folia

unit possibly a fault.

Possibly fault at top of sulphides in this unit

DDH 79V94R (2–8)

Cyprus Anvil Mining Corp.
Lithologic Log

Date: Aug 26/84 Logged By: GAS/LCP

Code (1)	From (10–14)	To (16–20)	Recov. (22–24)	No. (26–28)	Unit (30–34)	Description (35)
L						Minor diss. white dolomite in qtz-S= lenses. Total S= 20% at TOI & EOI. 155-160 total S= 5-10% Upper ½ py > sphal. Lower ½ py ≈ sphal. possible break at 155 between 4A4 & 4A0. Split/now trashy/steep S2
50.3 L	1640	1650		16	4E4	Fine-grained, mod. banded, pyritic massive sulphides. Split/intact
50.6 L	1650	1660		17	4G4	Well banded, sphal-rich baritic massive S= Fine birdshot texture in sphal-rich layers. Split/intact
51.2 L	1660	1680		18	5C7$	±4 Mod. hrd, dk med. green to greenish beige, PS2 fltd to CS2 fltd, chlorite-qtz-dolomite phyllite. Dk. green at TOI, beige at EOI. Mod. developed leopard rock texture w/ unusually thick chlorite laminae separating qtz-dol. lenses. Intact.
51.8 L	1680	1700		19	4G4	Strongly & thinly banded baritic massive S= Similar to Unit #17. Split/orig intact
52.6 L	1700	1725		20	4J827	$ Minor Bxa of ovoid black magnetite-rich frags in fine-grained bluish black sphal-magnetite-galena-py matrix which has networks & seams of sphal & po. — these cut through matrix & frags. Mod. fltd.-fltn. contacted when bxa best developed. 30-40% mag. cpy in fractures xcutting magnetite frags. Split/orig intact

C.A.M.C. 1981-E-3A

Towards EOI, dolomite diss. in matrix between blk. mag. frags. Lower contact grad. & interlayered w/ magnet.-bearing massive baritic S= Bxa formed during ductile flow? Mag. more brittle than avg. barite?

DDH 79V94R

Cyprus Anvil Mining Corp.
Lithologic Log

Date: Aug 26/84 Logged By: GAJ/LCP

Code	From	To	Recov.	No.	Unit	Description
55.8		1830		21	4G48	→ (4E468) 50:50 Str. banded, baritic massive S= Total S= 85%. Barite as sparse white bands. Sphal. reddish brn, locally honey coloured. Magnetite diss throughout – more abundant at top where forms streaky, lenticular bands. Split/orig. intact
58.6	L 1830	1923		22	4D3	± $ ± 9 minor ± 7 minor Hard, light grey, pyritic qtzite. Interbanded nearly massive S= and diss qtzose S= Total S= 40% w/ py 2X to 3X sphal. Cpy locally noticeable in fractures xcutting qtzose bands. Minor po in similar setting. Last 4' unit contains diss white dolomite in qtzose portions. Split/orig. intact
59.5	L 1923	1953		23	4A4$	7 minor Thinly banded, dk grey to blk, locally lithoned, carbonaceous pyritic qtzite. Minor dolomite in qtzose bands. Total S= 15% Py > sphal >> po. Minor cpy noted in xcutting fractures. Grades down to med. grey variants → gradation to next unit. Split / trashy now
60.4	L 1953	1980		24	4D7	± $ minor ± 8 minor S= bearing qtzite. Total S= 25%. Largly py, lesser sphal, minor po & ga. S= in bands and networks in more qtzose bands. Networks follow S2 & in fractures xcutting. Minor interbanded ddlo at TOI. Minor interbanded mag at EOI. Both contacts gradational. Similar to parts of Unit # 22. Split / intact

DDH 79V94R
2 8

Cyprus Anvil Mining Corp.
Lithologic Log

Page 8 of

Date: Aug 30/84 Logged By: GAS/LCP

	Code	From	To	Recov.	No.	Unit	Description
	1	10 14	16 20	22 24	26 28	30 34	35
64.3	L	198 0	211 0		25	4C89	±3 ± $ minor
							Mod. hrd to hard, greenish grey, py-po-magnetite bearing, slightly chloritic qtzite. Unit consists of bands of chlorite+qtz, py+qtz, py-qtz-po, mag-po-qtz, py-mag-qtz; Banding poorly developed, parallel S1 - locally forming D2 folds, extensively disrupted into xcutting networks. Minor sphal locally. Sporadic, flashy, coarse-grained cpy - largely in xcutting fracture networks. Bands v. irregularly developed. Unit characterized by dk grey to black irreg. bands, to lenses, to blebs of magnetite. Total S= and oxides 30-40%. Largely py with po = ½ py, mag ≈ po. Minor sphal, cpy. Grade below 5%. Not a normal ore type!! Contains 0.1-0.3 m bands w/ up to 80% total S= and oxides. Split, orig. intact. Very similar to previous unit - major difference is amt of magnetite. Also clearly related to Unit ending at 192' - only less dolo-rich.
68.3	L	211 0	224 0		26	4C77	9 minor
							Light greenish grey po+py bearing qtzite similar to previous unit. Only minor magnetite - lacks well developed mag. lenses. Total S= 25-30%. Largely po, po 2 or 3 times py. Minor flashy cpy in fractures & irreg. diss. in bands. S= occur in poorly defined irreg S1 & S2 parallel bands & are mobilized into xcutting networks. Grade is pathetic - minor sphal & galena noted locally. Not a normal ore type because more pyrrhotitic - fits into 4H qtzose analogue w/ pyrite modifier. Split/intact.

DDH 79V94R

Cyprus Anvil Mining Corp.
Lithologic Log

Date: Aug 30/84 Logged By: GAS/LCP

	Code	From	To	Recov.	No.	Unit	Description
	1	10 14	16 20	22 24	26 28	30 34	35
74.1	L	2214 0	2430		27	4D$1	7 minor 8 minor 9 minor ±3
							Hard to mod. hard, light greenish grey, pyritic qtzite. Poorly banded - as previous units. Dominant S= is py several times > sphal. Minor mag. locally. Minor po & cpy largely in xcutting fractures. Minor diss. dolomite - esp. in last ½ of unit. Total S= 30%. ±3 for 0.1m or less bands of nearly massive py-mag S=. Split /orig intact. Top ½ better grade than bottom ½.
77.0	L	2430	2527		28	4C17	9 minor 8 minor ±3
							Light greenish grey, hard, pyritic qtzite. S= largely py, lesser po, minor sphal, minor mag developed in bands ∥ S1 or S2. Po & cpy in xcutting fractures particularly in more qtzose layers. V. minor $ in xcutting fractures. First 1' homogeneously strongly pyritic - remainder of unit more banded. Last 2½' richer in sphalerite. Split /orig intact. Total S= 25-30%. Differs from last unit mainly in amts of sphal (less) and dolomite (much less)
80.2	L	2527	2630		29	4C79	minor
							Light greenish grey, pyrrhotitic & pyritic qtzite. Similar to last unit only more po. Total S= 30%. Po 2 or 3X > py. Minor sphal. Cpy in xcutting fractures as previously described. Similar to Unit ending at 224 m. Split /orig intact.
87.2	L	2630	2860		30	4C79	Choritic [4L61779]
							Hard to mod. hrd, light greenish grey, pyrrhotitic qtzite. Minor diss. dolomite. Total S= 20%. Largely po. Progressively less siliceous downhole - decreasing hardness & increasing phyllitic nature. Minor sphal & local flushy cpy. V. minor py

C.A.M.C. 1981 - E - 3A

S= in irregularly defined bands & xcutting networks. Where po rich, incipient post D2 bxas developed.

DDH 79V94R
2 8

Cyprus Anvil Mining Corp.
Lithologic Log

Date: Aug 30/84 Logged By: GAJ/LCP

Code	From	To	Recov.	No.	Unit	Description
1	10 14	16 20	22 24	26 28	30 34	35
		2860		310		Unit appears to represent gradation from previous qtzites into underlying altered phyllites. Unit distinctly greener, esp. in lower ½. S2 folia silvery, very faintly greyish green. Cannot see recognizable good grey partings. Gregg thinks not exhalative ore type – more related to 4L alteration rocks. And probably same could be said for previous unit. Difficult to make the distinction from 184' down. Split/orig. intact
93.9 L	2860	3080		311	4L6	7 minor 4 v. minor (4L 6 weak 7 minor @?) 50:50 Mod hrd to mod. soft, med greyish green to creamish green. Muscovite-chlorite-qtz phyllite. PS2 fltd to thinly lithoned. Distinguished by reddish brn weathering colour along S2 folia & fractures – perhaps due to ankerite. S2 folia silvery green to greenish cream. Unit also charact by presence of qtzose bands w/ coarse dk green chlorite, minor po, minor sphal – locally they resemble stringers. Unit noncalcareous. Intact. Cut by many healed fractures at 25° Core axis. No signif faults. First 1m & last 2m particularly green.
101.7 L	3080	3335		312	4L67	# minor Mod. soft to mod hrd (slightly softer than last unit), mod. lithoned to PS2 fltd. locally, medium greyish green, slightly calcareous, but largely noncalcareous phyllite. Contains minor grey bands. S2 folia med. greyish green. Minor greenish cream bands. A few % po & minor cpy. Po in bands w/ qtz & calcite locally forming lithons. Cc mainly in last 2/3 of unit where 5% of unit calcareous, largely sparsely developed lithon forming bands. V. minor metabasite at 321.5'. Texturally resembles 5B slightly in that it has lithons & minor cc. However lithons not developed to extent to rule out possibly Mt Mye phyllite. Protolith remains ambiguous. Unit not hard enough to have been derived from a 5A1 type of rock – ∴ cc hard to explain if Mt. Mye. Intact.

C.A.M.C. 1981 – E – 3A

DDH 79V94R (2–8)

Cyprus Anvil Mining Corp.
Lithologic Log

Date: Aug 31/84 Logged By: GAS/LCP

Code	From	To	Recov.	No.	Unit	Description
103.3	3335	3390		33	4L76	weak.
						Mod. soft, mod. lithoned, noncalc, greenish cream phyllite. S2 folia silvery, slightly greenish cream. Musc-rich. Differs from last unit because creamy folia better developed & noncalc. Po developed w/ chlorite in qtzose bands locally forming lithons. Intact.
107.3	L 3390	3520		34	4L67	9 ± # [5B0489]
						Mod. soft to mod hard, med slightly greyish green, mod lithoned to PS2 fltd, v. slightly calcareous to noncalcareous to calcareous phyllite. S2 folia silvery pale green to silvery med. green. Contains several % po, minor cpy largely in S1 & S2 parallel bands. Commonly assoc. qtz and/or cc. Cc in local lithon forming bands. Proportion cc increases downhole. White fresh, weathers brown. Cpy mobilized into xcutting fractures. Po 5%. Last 2' contains as much cc as next unit — differs mainly in colour of phyllite & amt. of po. Based on abundance of lithons & calc. bands have to consider possibility that this is derived from Vangorda fm. Intact.
					*	N.B. This core is green, qtzite strongly altered, contains po & cpy. Yet still retains cc. Compared to 3G stringered under Grum; these less altered in that still grey on S2 folia. Therefore very unlikely footwall of Grum dogmatic horizon is Vangorda fm. *
114.0	L 3520	3740		35	5B04	8 $ Bio minor [4L# 6 $ 7 v. minor bio minor]
						Mod. soft, mod. lithoned, calcareous, med green to greyish green phyllite. S2 folia silvery med green, greyish green, locally greyish cream. Local preservation of grey phyllite colour on S2 — very minor. Also dolomitic. Minor biotite locally in ass. w/ carbonate-bearing bands. No convincing metabasite sections.

Units 32, 33, 34, 35 breaks based on colour & not our ribbons

C.A.M.C. 1981 – E – 3A

Texturally unit very similar to 5B Vangorda — at least locally. Largely more ambiguous. Mod. broken to intact. Differs from next unit because less grey colour in this unit.

DDH 79-V-94-R (2 / 8)

Cyprus Anvil Mining Corp.
Lithologic Log

Date: Aug 31/84 Logged By: GAS/LCP

	Code	From	To	Recov.	No.	Unit	Description
	1	10 14	16 20	22 24	26 28	30 34	35
117.0	L	1317.4 0	1318.4 0		316	151801	"calc-silicate" bio minor & minor.
							Greenish grey, mod. to well lithoned, calcareous, mod soft to mod. hrd. phyllite.
							Contains cc-gross disto & qtz in lithon-forming bands. These have minor po.
							Also have diss green. mineral. Also contains biotite. Unit resembles 580
							in that mod. well lithoned & calc. Cc is brown weathering - may be
							parting dolomite or forsen cc. S2 folia greenish grey. Overall green
							tinge to unit. Much greyer than last unit. Comparable to 580
							calc-silicate bio minor. Intact.
126.8	L	1318.4 0	1411.6 0		317	151801	8 9 bio minor [426 # 7 bio minor]
							Med greyish green, mod. lithoned, mod. calc, mod. soft to mod. hrd. phyllite.
							Cc in lithons. Resembles last unit only much less grey colour preserved.
							Very similar to unit # 35 (ends at 374). Contains minor diss po -
							esp. in lithons. Cc weathers rangeish-brown. Minor biotite locally.
							Last 1m. is more po rich than rest of unit. Mod. broken, 5cm INA
							gouge 0.8m from TOI. Minor incip gouge 403m. Otherwise mod brkn to intact
							No signif faults.
137.8	L	1411.6 0	1452.0 0		318	141617	2 9 minor [36489]
							Med green to greyish green, noncalc, mod lithoned to PS2 f/g, chlorite-musc phyllite
							S2 folia mod silvery green w/ irregular dk green mottling to striping - not to be
							confused w/ hangend rock. S2 folia distinctly green but have definite musc. sheen.
							No grey left. Contains up to 5% po mostly as minor diss. locally - like near
							427' and 435-438 po & py concentrated in stringers or bands up to 10cm thick -
							comprise up to 10% (427) and 30% (435-438) of rock otherwise po & less py in
							bands or stringers locally w/ qtz & chlorite. TOI - 421 mod. broken, 421-423 mod. brkn

C.A.M.C. 1981 - E - 3A

w/ local incip gouge zones / 423-447 intact / 447-EOI rubbly to mod. broken w/ minor incip gouge. related to minor fractures cutting core at acute angle. Minor flaky cpy - esp. where S2 rich

DDH 79-V-94-R (2 / 8)

Cyprus Anvil Mining Corp.
Lithologic Log

Date: Aug 31/84 Logged By: GAS/LCC

Code	From	To	Recov.	No.	Unit	Description
1	10 14	16 20	22 24	26 28	30 34	35
157.6 L	14512 0	15117 0		1319	5B1614	89 = 0 minor [3648 = 3 minor]
						Mod. soft to mod. hard, med greyish green to greenish grey, largely PSZ flds to locally slightly lithonel, largely noncalcareous although locally slightly calcareous in bands phyllite S2 surfaces greenish grey – almost all have definite grey tinge. Minority are silvery greenish cream. In detail rock finely banded to thickly laminated. Bands consist of a = (most abundant) – soft variably grey, greenish grey & greenish cream phyllitic material and b = med green, harder, gbs – chlorite/actinolite – po ∓ cc bands may contain up to 50% po, minor py or as little as 1-5% po (abundantly chloritic) – latter bands commonly ass. w/ bio. overall bio content of unit minor. bio commonly developed as selvages or envelope to chlorite & variably S= bearing stringers/bands. About 10% of bands calc arenous. Rock consists of 25-30% these more granular bands. Total S= 5-10% Upper portion (above 507) po dominant S= - py present. Lower portion py dominant S=, po present. Both portions have minor cpy. Unit altered metasediment – phyllite. based on grey colour. Very low cc content & general lack of well developed lithons suggest not Vangorda. However possible S= may have replaced carbonate. Outcrop appearance resembles 5B calc-siliceous bio ——— aka 3G calc siliceous bio. Cannot definitively name formation. Top 3m less po-rich (460-465 unit greener than average & resembles previous unit. Unit related to last unit – only not as green & with slightly more S= banding. TOI-458 mod. broken – no fault/ 458-EOI intact. Not HL because still has grey on S2 folia.
						lower contact gradational.
160.5 L	15117 0	15216 5		1410	HL16	weak 72 # minor
						Slightly calc, weakly lithonel to largely PSZ flds, light greenish cream to cream, musc > chlorite phyllite. Weakly calc. in bands. Same rock as last unit only phyllitic bands entirely bleached to greenish cream w/ no relict grey. S2 folia very pale greenish cream.

DDH 79V94R

Cyprus Anvil Mining Corp.

Lithologic Log

Date: Aug 31/84 Logged By: GAS/LCP

Code	From	To	Recov.	No.	Unit	Description
						Last 0.5 m. light coloured – largely due to lack of qtz-chlorite-S= banding. S2 folia are same colour as rest of unit. Intact S= are po & py in bands w/ qtz-chlorite? – minor cc. Total S= 3-5%.
164.0 L	526.5	538.0		41	4L6	GOUGE & RUBBLE
						derived from previous unit. Internal f'ltn 25-45° core axis. Upper & lower contacts IND. Presumed a signif fault — or easily most signif fault zone in DDH. Does not look like shallow fault. Recovery OK.
166.6 L	538	546.5		42	3G48	
						Mod. soft to mod hrd, med. green, PS2 f'ltd, chlorite-musc phyllite. S2 folia silvery med. green w/ distinct musc tinge. Cc only on fractures. Rock overall homog. Thin qtzose bands ∥ S1 & S2 — very locally form lithons. No signif S=. Again impossible to state formation. Well within spectrum of units below qtz-S= in this DDH.
						EOH = 546.5 feet

NOTES — overall impression.

DDH 79V96R (2 8)

Cyprus Anvil Mining Corp.
Lithologic Log

Date: Aug 31/84 Logged By: GAS/LCP

Code	From	To	Recov.	No.	Unit	Description
	10 14	16 20	22 24	26 28	30 34	35
L		11512.0		1	5B16	
						Med grey, greenish grey, well-lithoned, noncalcareous phyllite. Rare po porphs. Degree of Tithon development typical for Vangorda — but rock is noncalcareous, — could be Mt. Mye.
L		11950		2	5C3	
						Largely Leopard Rock w/ minor interlayered phyllite
L		12492		3		
						Noncalc, largely PSZ ftld to thinly lithoned, med grey-greenish grey phyllite. Po-gt-chlorite stringers. Would be comfortable in Crown Dogmatic footwall. Grades down into more altered greenish cream variant.
		12912				Ore.
						Rest of DDH Phyllites are quite altered Abundant po-gt-chlorite "stringers". Phyllite is distinctly pale green colored. Difficult to impossible to name the pre-Tith formations.

CYPRUS ANVIL MINING CORPORATION Page 1 of ____

DIAMOND DRILL CORE LOG Date: ____

Hole Number: 79VX01

Reference Fabric Orientation Diagram:

Project: Vangorda Plateau remap

Location: ____

Claim: ____

Terr.Plane Co-ords.: 6903098.3 N

CAMC Mine Survey 593824.5 E

Grid Co-ords: 6E /

Elevation: 1123.23 m

All symmetry determinations looking

Total Depth: 1270.0 feet = 387.1 metres

NW with 52 dipping

Inclination: -90°

SW with dip azimuth ____.

Purpose: ____

Reason hole Terminated: ____

Logged by: GAS / LCP

Date(s) Logged: July 27-28 / 1984

Drilling Contractor: ARCTIC

CORE Size	From	To	Collar Cased and Capped: ____
Trimmed	0.0	115.0 feet	
NQ	115	1270 feet	

Hole Cemented: ____

Steel down hole: ____

Started: ____ Completed: ____

Cyprus Anvil Mining Corp. Page 2 of _____

DDH 79-VX-01 (2 8)

Diamond Drill Core Log Date: _____ Logged By: _____

Code	Drillhole	Elevation	Northing	Easting	Units (feet/metres)	R.F.E.	
	2 8	10 16	17 24	25 32	34 39	41 42	
T	79VIX01	11123.2	9030918.3	5938245.5	F	S2	

Feet

Code	Drillhole	Depth	Zenith Angle	True Azimuth	Comments
	2 8	10 14	22 26	28 32	34 56
R	79VIX01	100	1801.0	090.0	AT COLLAR
R	79VIX01	16420	1614.3	0151.0	
R	79VIX01	18420	1541.5	0150.0	
R	79VIX01	10420	1441.0	0143.0	
R	79VIX01	11970	1401.5	0163.0	
R	79VIX01	12420	1361.0	0148.0	
R		.	.	.	
R		.	.	.	
R		.	.	.	
R		.	.	.	
R		.	.	.	
R		.	.	.	
R		.	.	.	
R		.	.	.	
R		.	.	.	
R		.	.	.	
R		.	.	.	
R		.	.	.	
R					
R					
R					
R					
R					
R					

Code	Drillhole	Comments, Errant Remarks, Snivellings and / or Lewd Suggestions
	2 8	10 56

FEET

FA79VX1

DDH ~~79VX01~~

2 8

Cyprus Anvil Mining Corp.
Lithologic Log

Date: July 27/84 Logged By: GAS/LCP

	Code	From	To	Recov.	No.	Unit	Description
	1	10 14	16 20	22 24	26 28	30 34	35
34.1	L	0 0	112 0		1	#	Overburden – Teiconed – no recovery
41.7	L	112 0	137 0		2	3G0	
							Med grey, soft, noncalc, PS2 fltd, homogenous phyllite
							Poker chippy to rubbly 112-137 / only 12' recovery / 112-117-1½ ft
							117-127 6', 127-137 2' Only minor gouge
47.8	L	137 0	157 0		3	5A3	GOUGE
							Gouge of black, ground up 5A, qtz-dolo vein material, locally good
							recov of intact, flaser textured, coherent fault material Internal
							fabric 69° & 35° – both ooo. Like cemented gouge
							Recovery is 5' in 20' = 25%
51.5	L	157 0	169 0		4	5A16	
							Hrd to mod. hrd, dk grey to black, PS2 fltd, noncalcareous, PS2 striped,
							siliceous, carbonaceous phyllite Mod "Dolomite flash" Core mod
							brken / locally rubbly / 9' recovered
52.3	L	169 0	171 5		5	5C3$	±4
							Light grey calcareous patches sep by anastomosing chloritic folia. Fine
							grained "Leopard Rock" Minor carbonaceous phyllite in COI. Mod
							brken – recov. IND – seems ok
77.7	L	171 5	255 0		6	5A6	±1 ±0 MINOR
							Dk grey to blk, mod. hrd, locally hrd or mod. soft, variably but only slightly calc,
							PS2 fltd. Calc occurs in thin bands – is small % – remainder of unit

has good "dolo flash". Extensively rubble – Seems to be some signif softer intervals. TOI-206 rubble & v. brken

176-177 5DH+ interband

C.A.M.C. 1981 – E – 3A

7
255

DDH 79-X-91
2 8

Cyprus Anvil Mining Corp.
Lithologic Log

Date: July 27/84 Logged By: GAL/LCC

Code	From	To	Recov.	No.	Unit	Description
1	10 14	16 20	22 24	26 28	30 34	35
						TOI - 177 recov OK / 177-187 3' rubble / 187-197 3' brken core & rubble / 197-205 4' brken core & rubble / 205-216 recov OK last 2' rubble / 216-227 4' brken & rubble / 227-235 9' mod. brken & rubble / 235-244 12' mod. brken to v. brken & rubble / 244-249 v. brken recov OK / 249-EOI 7' rubble & v. brken core. PS2 running down core axis. Not much gouge recovered. Suggest significant fault.
L	12515 0	12714 0		17	3G91	I1 I3 (3E1) (3F9) 60:20:20
						Dk grey to blk, hard to mod. hrd, thinly laminated, carbonaceous, finely x/line marble interbanded w/ PS2 striped hrd to mod hrd ciliceous phyllite & dk grey, variably hard, PS2 flkd, variably calc. phyllite. Unit 20% marble. Core mod broken throughout. Recov OK. 2' sections chevron to kink style late-post D2 fold perhaps related to above steep zone - steep limb 20° / shallow limb 70° to c.a. Axial pl. approx. crenulation in underlying phyllites. Int reminiscent of 3G9 / 3F9 int of Mt. Mye below Dease lake fault.
L	12714 0	13110 5		18	3G91	I3 minor 1 borderline
						Homogeneous, PS2 flkd, locally thinly laminated, mod hrd, dk grey to black, variably calc. phyllite. One minor SD teff 1" at 280.5'. Similar to main lithologies of last Unit #7. Break at no short marble bands. Short lithon sections of calc-qtz-minor actinolite (?) amounting to ≈ 1% unit - bands a few cm thick. Core mod. broken - recov. OK TOI-290 / 290-296 1½' brkn core / 296-303 4' brkn core & minor rubble. 303-EOI 5' brkn core. Core has dull grey rather than blue grey. Transitional toward EOI to 3G91 [3E1]. Minor sphal. at EOI and 279' ass qtz band. Sparse diss po ±py.

C.A.M.C. 1981 - E - 3A

DDH 79VX01 (2 — 8)

Cyprus Anvil Mining Corp.
Lithologic Log

Date: July 27/84 Logged By: GAI/LCP

Code	From	To	Recov.	No.	Unit	Description
	10 — 14	16 — 20	22 — 24	26 — 28	30 — 34	35
95.1 L	131165	131120		19	5D##	± 4
						Homog, PS2 flkd, pale green, musc-chlor-calc phyllite. Resembles 5D. Greenish beige to off-white ± 4 because slight green left. Mod broken
97.2 L	131120	131190		110	316119	[3E1]
						Hrd, dk grey, PS2 flkd, carbonaceous, siliceous phyllite. Minor po, possible sphal. Resembles lower portion of Unit # 8. "Dolomite flasks" — noncalc. End of unit first calc bands. Minor 5D4 band 2" thick 6" from EOI. Mod. brkn, recov OK.
101.5 L	131190	131330		111	31G31	± 9 (3F9 ± 0) 80:20
						Mod. soft, med. grey to dk grey, PS2 foliated, variably calc phyllite interlayered w/ finely xlline, blue grey to black, mod hard to hrd marble. Units v. thinly interbanded & internally thinly lamin to thinly lamin in shades of grey. Locally mod hrd. 20% marble. Minor 5D4 tuff bands similar to above unit 2" thick TOI, 2 ½" thick bands EOI. Marbles distr. throughout. Mod. brkn, recov OK — maybe 1' lost
103.6 L	131330	131400		112	3E119	v. minor 1 borderline [5A619 minor]
						Mod hrd to hrd, noncalc, PS2 flkd, carbonaceous, siliceous phyllite. Mod dk grey to black. Overall homog, thinly to thickly laminated. Well developed PS2 striping — med grey phases lithons separated by softer blk folia. Folia 1-10 mm thick. Lithons 1-20 mm. Minor po diss ll S2. Mod. "dolomite flash." Core mod. brkn to intact. Recov. good. 1" 5D4 band at COI.

DDH 79-VX-01 (2 — 8)

Cyprus Anvil Mining Corp.
Lithologic Log

Date: July 27/84 Logged By: GAJ/LCP

Code	From	To	Recov.	No.	Unit	Description
	10 — 14	16 — 20	22 — 24	26 — 28	30 — 34	35
106.6 L	131410	131510		113	15C13	
						Homog., PS2 flkd, calc, med. greenish metabasite. Med green - dk green chloritic folia. Mod. brkn / recov OK
107.6 L	131510	131532		114	15B810	[3G483]
						Mod. soft, med. to light olive green, calc. phyllite, Irregularly PS2 flkd. Calc in patches / patches greenish-beige muss. rich. S2 folia med to pale green w/ silvery lustre. looks like altered phyllite. Not like 5D despite the colour - texture wrong. Lower contact gradational over 2' Intact / recovery OK Poor lithons
109.3 L	131532	131585		115	15B101	B10 minor calc-silicate
						V. tight lithon texture. Gradational upper & lower contacts. Mod to med. dk grey w/ brnish tinge, calcareous, mod soft to soft phyllite. One black chert nodule noted. Core intact.
114.6 L	131585	131760		116	15B1810	calc. silicate ± bio
						Mod. soft to mod. hrd, med green to pale olive green, highly calc, tightly lithoned phyllite. S2 folia slightly grey green to pale silvery green. V. soft noncalc, light olive green phyllitic bands separating harder green calc-qtz-actinolite ± bio ± po bands. Really good example of combined calc silicate + development of green 5BB. Intact / recov OK. Upper contact grad. / lower sharp
121.1 L	131760	131975		117	15C13	→ 5DO
						Thickly interbedded, mod. soft, calc, med to dk greens, finely mottled, PS2

C.A.M.C. 1981 - E - 3A

Core intact - recov. OK
locally mod. brkn

Strd. metabasite transitional to homogeneous, PS2 flkd, noncalc to v. weakly calc, unmottled, chloritic phyllite. Appears to be alter orig. grain size variation in metabasite. Related alt. at both ends implies sill or infold.

DDH 79VX01 (2–8)

Cyprus Anvil Mining Corp.
Lithologic Log

Date: July 27/84 Logged By: GAS/LCP

Code (1)	From (10–14)	To (16–20)	Recov. (22–24)	No. (26–28)	Unit (30–34)	Description (35)
130.9 L	397 5	429 5		1 18	5B80	± bio calc silicaty (5D0)[(5C3)] 70:25:05
						5D largely refers to zone 387'-415' [(5C3)] is for 2 6" bands
						at 410-412'. Mod. soft to mod. hrd, pale to med. green, CS2 - PS2
						fltd, calc, chlorite rich phyllite Excellent lithon texture - light
						silvery green S2 folia. Sections of homog green calc. chloritic
						phyllite Soft, lenticular, chlorite fltd/mottled zones resemble Leopard
						Rock texture of fltd. 5C3 3' biotite rich section in upper portion.
						Mod. brken / recov. 100% +.
141.5 L	429 5	464 5		1 19	5C3	
						Small scale version of Leopard Rock Med to dk green, calc chlorite phyllite
						w/ white calc. patches & mottles between PS2 folia. Unit homogenous
						Two 1" thick fine chlorite seams near 444'. Grades from relict
						ign. texture to fine version of Leopard rock. Core intact
145.0 L	464 5	476 0		2 0	5B80	B10 calc silicaty
						Mod. soft to mod. hrd, Well lithoned. Med. to dk green, calc. chloritic
						phyll. Thinly laminated shades of green & off green white. Patchily
						biotitic assoc. largely fractures & some granular bands Resembles
						crenulated 5D field — espec. at TOI. Lower cnt. grad &
						arbitrary - based on 1st appear. of blue-grey to grey, noncalc.
						phyllitic bands. Core intact

DDH 79UX01 (2 — 8)

Cyprus Anvil Mining Corp.
Lithologic Log

Date: July 27/84 Logged By: GH/LCP

Code	From	To	Recov.	No.	Unit	Description
	10 — 14	16 — 20	22 — 24	26 — 28	30 — 34	35
214.2 L	4716 0	7103 0		121	5IB101	calc silicate ± bio
						Calc, well lithified, med greenish grey w/ brn biot patches, mod hard to locally hrd w/ thin soft bands, phyllitic. Grades from blue grey & greenish white banded at TOI to more homog greenish grey &, green & white & brown green & white banded at base.
						Overall homogeneous — looks like good 5BO equiv. Green is actinolitic (?) in granular qtz-calc bands. TOI - 527 intact / reduced at 497' / 527-569 mod. brkn, local rubble & reground core w/ only 20' recovery = 540-547 2' brkn & rubble, 547-552 " " ,
						552-555 mod brkn OK, 555-564 2½' mod. brkn OK, 564-567 6" brkn, 567-569 rubbly OK / 569-651 intact, minor rubble 637, 628 recov. OK / 651-656 rubble - fault bxa 1' recov minor steep fault
						10° C.A. subhorizont slicks / 656-660 intact minor qtz-cc crackle bxa / 660-661 rubbly / 661-EOI intact No signif faults.
243.5 L	7103 0	7919 0		122	5IB101	calc-silicate ± bio ±2 minor
						Mod hrd to mod soft, med grey to dk med grey, well lithified, calc. phyllitic White to green-white mottled to green-brn-white mottled granular qtz
						bands. Typical 5BO Excellent skarn sections calc-silicate minerals Qtz-calc-biot-actinolite. Diff from above w/ clean-cut noncalc, non biotitic phyllitic bands for this unit Mod brkn to intact
						TOI - 723 / 723 - EOI intact
253.5 L	7919 0	8312 0		123	5IB102	calc silicate ± bio
						Dk grey to med grey, well lithified, calc, mod. hrd to mod soft phyllitic. Typical 5B texture. Similar to Unit # 22 only phyllitic bands dk grey. Intact

C.A.M.C. 1981 - E - 3A

All 5BO units have slight crackle bxia of qtz-cc tension gashes, etc.

DDH 79VX01 (2–8)

Cyprus Anvil Mining Corp.
Lithologic Log

Date: July 27/84 Logged By: GAJ/LCP

Code (1)	From (10–14)	To (16–20)	Recov. (22–24)	No. (26–28)	Unit (30–34)	Description (35)
289.8 L	8320	9510		24	5B0	calc.-silicaty bio
						Mod. hrd, med grey, well lithened calc. phyllite Similar to Unit # 22. Bluish greenish grey noncalc. phyllitic bands interlayered w/ mottled green-white-brn. bands. Contrast to higher up DDH - more uniformly biotitic By 890' core takes on overall brownish med grey colour. Proport. granular/phyllitic bands constant in DDH about 1/3 grey phyllite / 1/4-1/2 granular white / remainder fine micaceous qtz-calc bands. Good example of 5B transitional to 3D. Intact - recov OK. Few steep cc veinlets to crackle zones & tension gashes
295.1 L	9510	9685		25	5B0	calc-silicaty bio ± 6
						Mod hrd, PS2 fltd, weakly calc, brnish grey phyllite Same as Unit # 24 only less lithons-forming granular qtz bands. Intact.
296.6 L	9685	9735		26	5E0	B10
						Thickly laminated to v. thinly banded. Finely xlline blue-grey marble interbanded w/ slightly calc biot-actinolite (?) — dk brnish grey phyllite Very unusual lithology. 20% marble bands. PS2 fltd - no lithon texture Intact Not lithons but rather marble bands.
317.9 L	9735	10430		27	5A16	
						Mod. "dolomite flash" PS2 fltd, dk grey, thinly PS2 striped, mod. hrd to hard, noncalc., carbonac., sil. phyllite Minor py flecks along S2. Negligible granular qtz-sulphide bands. Minor 5D4 band 1" at 987, & 1013 - 1 1/2", sharp S2 ll contacts. TOI - 974.5 mod. brkn / 974.5 - 981 IND gauge & rubble 50% recov / 981-1001 rubble, brkn core possible signif fault poker chippy 40% recov / 1001-1043 mod. v. brkn to rubbly, 80% recov. /

possible 45° CA vertical slicks take 0°

DDH 79.V.X.01 (2–8)

Cyprus Anvil Mining Corp.
Lithologic Log

Date: July 27/84 Logged By: GAJ/LCP

Code	From	To	Recov.	No.	Unit	Description
1	10–14	16–20	22–24	26–28	30–34	35
319.3 L	1043 0	1048 0		28	5D6	±0
						Weakly patchily calc, mod. soft, med green, PS2 fltd chloritic phyllite. Mod. brkn to rubbly – recov OK.
342.5 L	1048 0	1124 0		29	5A16	9 v. minor
						Wk to mod. "Dolo flash" Dk grey, PS2 fltd, noncalc, mod hrd to hard, thinly PS2 striped, carbonaceous, siliceous phyllite. Py laminations/streaks & minor po along S2. Similar to Unit #27. Still no granular qtz bands. TOI – 1056 rubbly, recov 60% IND/1056 – EOI mod. to v. brkn w/ many rubble & poker chippy intervals. Recov. OK. ≈ 80%
342.8 L	1124 0	1125 2		30	5C34	weak
						Off white to med green, PS2 fltd, chloritic, calcar phyllite. W/ fine mottled fltd texture like leopard rock. Margins light coloured – muscovite-rich. Intact.
345.4 L	1125 2	1133 5		31	5A16	9 minor
						Similar to Unit #29. A few py-qtz bands along S2. Mod. brkn – recov OK
346.6 L	1133 5	1137 5		32	5A16	(5C3 ±4) 50:50
						5C as 1' at TOI & EOI & short int. in middle. Mod. brkn – recov OK
352.8 L	1137 5	1158 0		33	5A16	9 py-po
						Noncalc, PS2 fltd, dk grey, hrd, sil. carb. phyllite. Minor qtz-sulphide banding w/ py – po similar to 4A bands. Mod. brkn to intact

DDH 79-V-X-01

Cyprus Anvil Mining Corp.
Lithologic Log

Date: July 27/84 Logged By: GAS/CCP

Code	From	To	Recov.	No.	Unit	Description
	10 14	16 20	22 24	26 28	30 34	35
356.0 L	1115180	1116185		314	51B14	bio calc-silicaty (5DO) (10Q# chlorite po) 85:05:10
						Mod. hrd, light grey to white w/ green & brn mottled bands. Mottling often bands. Slightly calc. Musc-qtz phyllite grading downward to musc-chlorite/actinolite-po phyllite w/ act-po in bands & grading further down to include bio Strange altered / possibly calc-silicaty rocks 5D is blue green
367.5 L	1116185	1201600		1315	51D16	± bio ± 3 minor
						Fine grained, well f/td, rel. homogeneous, bluish med green, PS2 f/td chlorite-actinolite (?) phyllite Generally noncalc — has a few calc seams. Below 1196' more calc than above Bio rich bands related to calcareous bands & could be interbands of altered phyllites, reaction rims around qtz bands, 5C gone to bio Core intact TOI-1193 / 1193-1198 mod broken, rubbly, poker chippy — recov OK / 1198-EOI rubble 5' recovery No sign. gouge. Much of section for calc in vein qtz ec. in rubble. Not normal 5D — more homogeneous, color bluish green rather than yellowish or olive green Fine mottled texture could be relict ign. — this could be 5C - fine grained
369.3 L	1201600	1211200		1316	31G119	
						Mod hrd to hrd, med. dark grey to dk grey, noncalc, PS2 f/td, sphal-bearing (minor) in pressure shadows around boudins. TOI-1209 rubbly 80% recov. 1209-EOI intact
369.6 L	1211200	1211300		1317	51D10	(5C3)
						Strongly f/td, homog, med greens, calc chloritic phyllite w/ fine mottled texture. Basically intact

C.A.M.C. 1981 - E - 3A

DDH 79VX01 (2–8)

Cyprus Anvil Mining Corp.
Lithologic Log

Date: July 27/84 Logged By: GAJ/LCP

Code (1)	From (10–14)	To (16–20)	Recov. (22–24)	No. (26–28)	Unit (30–34)	Description (35)
372.3 L	12113 0	12220		38	3G9	calc silicaty
						Med. dk. grey w/ greenish cast, PS2 fltd, noncalc, homogenous, mod. hard to soft phyllite. Alternating dk grey soft phyllitic bands & harder greenish qtzose bands — Laminated thickly. Fltn surfaces med. dk grey. Like dk version of 3G calc-sil. in DDH A007. Poker chippy / recovery OK
376.5 L	12220	12357		39	3G8	minor "calc-silicaty"
						Med. greenish grey, PS2 fltd, noncalc, soft, thinly to thickly laminated, homogenous overall phyllite. Thin dk grey phyllitic laminae alternat. w/ harder greener, qtzose laminae. S2 folia silvery med grey w/ slight green cast. Core intact
387.0 L	12357	12700		40	5D6	[(3G8)?]
						Largely noncalc, PS2 fltd, bluish-green, gen. homogenous, chloritic phyllite. Minor diss po. Unit has grey bands. Similar to Unit #35. Mod. soft to mod. hrd. Metabasite? 30% 10Q above 1242. Intact to TOI-1256 / 1256-1266 1½' recovery possible mislatch / 1266-1270 few inches of ground core
						EOH

DDH 79VXD1 (2–8)

Cyprus Anvil Mining Corp.

Structural Log

Date: July 20/84 Logged By: GAJ / LCP

Code (1)	From (10–14)	To (16–20)	Feature (22–24)	Sym (26)	S_0 Dip Direct. (28–32)	S_1 Dip Direct. (34–38)	S_2 Dip Direct (40–44)	Description
S		1160	PS2				70	
S		1360	PS2				40	CSn 33/270 post-D2
S		1650	PS2				25	CSn 10/220 post-D2
S		1730	PS2				22	
S		1740	PS2				22	
S		1800	PS2				10	
S		2080	PS2				31	
S		2270	PS2				05	
S		2390	PS2				05	
S		2500	PS2				05	
S		2540	PS2				30	
S		2640	PS2				61	ax plane of post D2 fold = 40
								sheet dip of S2 is 00
								Top  Bottom
								picture of D2 & post D2
S		2670	CS2	D			67	
S		2740	PS2				64	
S		2790	PS2				45	CSn 25/090 post D2
S		2910	PS2	D			53	→ CS2
S		3020	PS2	D			58	→ CS2
S		3200	PS2				48	
S		3370	PS2				69	CSn 15/015 post D2
S		3450	PS2				58	
S		3690	PS2				65	→ CS2
S		3820	PS2				55	
S		3970	PS2				58	
S		4130	PS2				68	
S		4300	PS2				60	
S		4440	PS2				63	
S		4620	PS2				70	
S		4760	CS2	Z			65	
S		4900	CS2	D			60	
S		4920	CS2	D			60	CSn 40/015 post-D2
		5040	CS2	D			65	

after 265' - no fold - homog domain of shallow dips

sphal ident. w/ po →

DDH 79-V-X-01 (2 — 8)

Cyprus Anvil Mining Corp.
Structural Log

Date: July 28/84 Logged By: GHJ/LLP

Code	From	To	Feature	Sym	S_0 Dip Direct.	S_1 Dip Direct.	S_2 Dip Direct	Description
1	10 — 14	16 — 20	22 — 24	26	28 — 32	34 — 38	40 — 44	
S		15190	CS12	S			70	
S		15400	CS12	D			60	→ PS2
S		15730	CS12	S			55	
S		15911	CS12				60	
S		16090	CS12	S			60	
S		16216	CS12	S			54	
S		16420	CS12				67	→ PS2
S		16720	CS12				25	
S		16790	PS12				63	→ CS2
S		16860	PS12				60	
S		17050	CS12				70	→ PS2 some D
S		17200	CS12	D			60	→ PS2
S		17400	CS12	S			70	→ PS2
S		17500	CS12	D			50	
S		17740	PS12				70	→ CS2
S		17880	CS12	S			68	
S		18100	CS12	S			70	
S		18250	CS12				68	symmetry unreliable M?
S		18370	CS12				65	→ PS2
S		18610	CS12				70	→ PS2
S		18810	PS12				63	
S		18940	PS12				65	
S		19130	PS12				70	
S		19360	PS12				70	
S		19550	PS12				75	
S		19730	PS12				70	CS_n? 40/000
S		20010	PS12				73	
S		20170	PS12				75	
S		20270	PS12				05	S2 steep from 1023-1032 — down core axis
S		20350	PS12				66	
S		20470	PS12				68	
S		20618	PS12				80	
S		20780	PS12				70	
S		20912	PS12				60	Wilson says 25-30° off DD
S		21170	PS12				70	

DDH 79VX01 (2–8)

Cyprus Anvil Mining Corp.

Structural Log

Page 15 of ____

Date: July 28/84 Logged By: GAJ/LCP

Code (1)	From (10–14)	To (16–20)	Feature (22–24)	Sym (26)	S_0 Dip (28–32)	S_0 Direct.	S_1 Dip (34–38)	S_1 Direct.	S_2 Dip (40–44)	S_2 Direct	Description
S		11300	CS2	S					74		
S		11480	PS2						72		
S		11610	PS2						55		
S		11790	PS2						68		
S		12110	PS2						85		sphal. present
S		12360	PS2						71		
S		12460	PS2						75		
S		12660	PS2						70		
											EOH

DDH EA79VX1 (2–8) Cyprus Anvil Mining Corp. Page 16 of _____

FEET ~~Structural~~ Log Date: _____ Logged By: _____

Code	From	To	Feature	Sym	S_0 Dip Direct.	S_1 Dip Direct.	S_2 Dip Direct	Description
1	10–14	16–20	22–24	26	28–32	34–38	40–44	
F	1120	1370	TR	5				
F	1370	1570	GFX	2				
F	1570	1690	2BR	7				
F	1690	1711	2B					
F	1715	1770	R3B					
F	1770	1870	R	3				
F	1870	1970	BR	3				
F	1970	2050	BR	5				
F	2050	2140	2B					
F	2140	2160	R					
F	2160	2270	BR	4				
F	2270	2490	BR					
F	2490	2550	R3B					
F	2550	2900	2B					
F	2900	2960	B	2				
F	2960	3030	B	5				
F	3030	3105	B	6				
F	3105	3330	2B					
F	3330	3400	1B					
F	3400	3532	2B					
F	3975	4295	2B					
F	5276	5690	2BR	5				
F		6370	1R					
F		6280	1R					
F	6510	6560	RX					10° to CA subhoriz slicks
F	6610	6610	R					
F	7030	7230	1B					
F	9735	9745	2B					
F	9745	9810	GR	5				45° to CA vert slick
F	9810	10011	RBT	4				
F	10010	10430	3BR	8				
F	10430	10480	2BR					
F	10480	10560	R	6				
F	10560	11240	3BR	8				
F	11252	11375	2B					
F	11375	11580	1B					

C.A.M.C. 1981 – E – 4

DDH EA79VX1 (2 — 8) Cyprus Anvil Mining Corp. Page 16 of _____

~~Structural~~ Log Date: _____ Logged By: _____

Code	From	To	Feature	Sym	S_0 Dip Direct.	S_1 Dip Direct.	S_2 Dip Direct	Description
1	10 — 14	16 — 20	22 — 24	26	28 — 32	34 — 38	40 — 44	
F	1193	1198	2BR					
F	1198	1209	R	7				
F	1213	1222	T					
F	1256	1266	M?	1				
F	1266	1270	C	0				

C.A.M.C. 1981 - E - 4

plot @ 1000 scale

CYPRUS ANVIL MINING CORPORATION

DIAMOND DRILL CORE LOG

Hole Number: 79-VX-1

Project: VANGORDA

Location: VANGORDA [illegible]

Claim:

Terr. Plane Co-ords.: N

E

Grid Co-ords.: [illegible]

593.824

Elevation: [illegible]

Total Depth: 1270.0

Fabric Orientation Diagram:

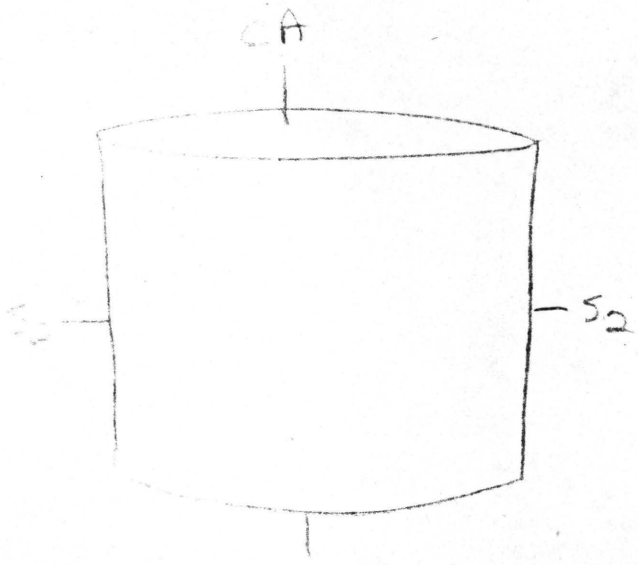

All symmetry determinations looking NW with S_2 dipping SW with dip azimuth 220.

Purpose:

Logged by: [illegible]

Date(s) Logged:

Drilling Contractor: A.D.D.

Core:

Size	From	To

Collar Cased and Capped:

Started:

Completed:

Cyprus Anvil Mining Corp.

Diamond Drill Core Log

DDH 79-VX-1

Code	Drillhole	Elevation	Northing	Easting	Comments
1	2 8	10 16	17 24	25 32	34
T	79-VX-1	1123.23	9013098.3	5938241.5	FEET

Code	Drillhole	Depth	Zenith Angle	True Azimuth	Comments
1	2 8	10 14	22 26	28 32	34
R	79-VX-1	0 0	180.0	.	AT COLLAR
R	79-VX-1	1692 0	161.3	051.0	
R	79-VX-1	1812 0	154.5	050.0	
R	79-VX-1	1042 0	144.0	043.0	
R	79-VX-1	1197 0	141.5	063.0	
R	79-VX-1	1242 0	136.0	048.0	
R		.	.	.	
R		.	.	.	
R		.	.	.	
R		.	.	.	
R		.	.	.	
R		.	.	.	
R		.	.	.	
R		.	.	.	
R		.	.	.	
R		.	.	.	

Code	Drillhole	Comments, Errant Remarks, Snivellings and/or Lewd Suggestions
1	2 8	10

DDH 79-VX-1 (2–8)

Cyprus Anvil Mining Corp.

Lithologic Log

Logged By: JWM

Code	From (10–14)	To (16–20)	Unit (22–23)	Code (25–27)	Description
L	1100	1150	01		TRICONED, NO CORE
L	1150	1370	02	5B26	grey phyllite absence of chlorite.
L	1370	1570	03	5A*	graphitic gouge - probable fault
					zone, where core is preserved,
					silica boudins abundant
L	1570	1690	04	5A6	
L	1690	1715	05	5D0	calcareous
L	1715	1870	06	5A6	
L	1870	2310	07	5A0	variably calcareous
L	2310	2320	08	0D0	
L	2320	2570	09	5A0	variably calcareous as in unit
					07
L	2570	2690	10	5A0	[illegible] reaction with HCl (10%)
					very calcareous
L	2690	3200	11	5A0	variably calcareous
L	3200	3330	12	5A3	as in unit 10
L	3330	3400	13	5A9	typical "ribbon bonded"
					nature similar to 4A, seamist
					threads of silica with minor
					sulfides. Py=po ≈ 2-3%
					pro-calc
L	3400	3498	14	5D0	calcareous Z Rk + phyllitic
L	3490	3625	15	5B7	variably calcareous
L	3625	3760	16	4L	[illegible] development of 4L,
					[illegible] 587 as above trace
					[illegible] of Do
L	3760	3971	17	5D0	as in unit 15, Z Rk.
L	3971	4295	18	5D0	[illegible] bonded, Finely bonded,
					minor carbonates
L	4295	4648	19	5D0	Z Rk as in unit 14+17
L	4648	7010	20	3G3	very calcareous throughout,
					minor bands carbonaceous
					[illegible] overall very homogeneous
					[illegible] this sections, minor biotitic
					[illegible] intervals throughout, unit possibly
					3D8 [illegible]

DDH [illegible] 2 [illegible] 3

Cyprus Anvil Mining Corp.

Lithologic Log

Logged By: JWM

	Code	From	To	Unit	Code	Description
	1	10 14	16 20	22 23	25 27	
73.8	L	7010	7342	21	3G9	3 (3D639)? this intervals
						resembles 5B2 graphitic
						horizon within 3G?
42.5	L	7342	7955	22	3G3	3 as in unit 20 but
						more carbon
42.8	L	7955	7965	23	0G0	
53.0	L	7965	8300	24	3G9	3 as in unit 21, minor po+py
						throughout
90.6	L	8300	9535	25	3G3	carbonaceous towards
						beginning of interval; locally grades
						to 3D78 throughout especially
						towards end of interval. Similar to
						unit 22+20, generally biotitic-phyllitic
96.7	L	9535	9733	26	3D4	3 carbonaceous throughout
97.0	L	9733	9745	27	3E[illegible]	variably calcareous.
[illegible]	L	9745	9800	28		graphitic gouge.
17.9	L	9800	10430	29	3E[illegible]	variably calcareous very fine grained
						foliaform py ≈ po ≈ 0.5% throughout;
						also as fine veinlets typical
						graphitic phyllite throughout
19.4	L	10430	10480	30	[illegible]	4 resembles 4L, but doubt it
43.3	L	10480	11262	31	3E3	as in unit 29, py>po total
						sulfide content > unit 29, locally
						[illegible] 1-3 cm resembles 4A0 (2A0)
						though silica generally absent.
43.6	L	11262	11272	32	[illegible]	4 as in unit 30
45.6	L	11272	11340	33	3E3	as in unit 31
46.6	L	11340	11370	34	3D3	4 as in units 30,32
53.1	L	11370	11585	35	3E[illegible]	variably calcareous as in unit 31
55.7	L	11585	11670	36	3D4	3
59.1	L	11670	11780	37	3D3	
63[illegible]	L	11780	11940	38	3D0	variably calc.
.3	L	11940	12117	39	3D8	carbonaceous
69.8	L	12117	12132	40	3H[illegible]	
72.5	L	12132	12220	41	3D[illegible]	[illegible]
87.1	L	12220	12700	42	3D[illegible]	[illegible]

DDH 82-VX-1 (2 8)

Cyprus Anvil Mining Corp.

Structural Log

Logged By: IWM

Code	From	To	Feature	Sym	S_1 Dip Direct.	S_2 Dip Direct.	Description
	10 14	16 20	22 24	26	28 32	34 38	
S		1160	PSZ			75 2210	R region 115.0-967.0 m
S		1370	PSZ			50 2210	w/ minor S & Z as below
S		1570	PSZ			85 2210	(mainly 5085A)
S		1670	PSZ			25 2210	S symm. observed @ 162'
S		1720	PSZ			30 2210	
S		1870	PSZ			20 2210	
S		1970	PSZ			20 2210	
S		2060	PSZ			25 2210	S sym. observed @ 206
S		2116	PSZ			15 2210	
S		2280	PSZ			10 2210	
S		2360	PSZ			40 2210	
S		2450	PSZ			05 2210	
S		2550	PSZ			05 2210	
S		2580	PSZ			26 2210	
S		2670	PSZ			75 2210	
S		2810	PSZ			45 2210	S sym observed at 283
S		2960	PSZ			50 2210	
S		3010	PSZ			60 2210	S symm. observed at 30
S		3200	PSZ			50 2210	
S		3270	PSZ			77 2210	
S		3430	PSZ			65 2210	
S		3530	PSZ			57 2210	
S		3690	PSZ			65 2210	
S		3770	PSZ			57 2210	
S		3870	PSZ			65 2210	
S		4000	PSZ			64 2210	
S		4180	PSZ			65 2210	
S		4300	PSZ			65 2210	
S		4400	PSZ			70 2210	
S		4670	FZR			80 2210	PSZ regions 467.0-705.0
S		4770	PSZ			80 2210	
S		4870	PSZ			80 2210	
S		4970	PSZ			75 2210	
S		5140	PSZ			30 2210	
S		5210	PSZ			60 2210	
S		5360	PSZ			40 2210	

DDH 79-VX-1 (2 8)

Cyprus Anvil Mining Corp.

Structural Log

Logged By: JWM

Code	From	To	Feature	Sym	S_1 Dip Direct.	S_2 Dip Direct.	Description
S		5520	PS2			75 220	
S		5710	PS2			60 220	
S		5810	PS2			60 220	
S		6070	PS2			70 220	
S		6170	PS2			65 220	
S		6280	PS2			62 220	
S		6420	PS2			68 220	
S		6670	PS2			55 220	
S		6770	PS2			65 220	
S		7050	F2	P		60 220	
S							
S							
S		7230	CS2			60 220	
S		7300	F2	E		72 220	S symm 705-730'
S		7390	F2	Z		65 220	Z symm 730-739
S		7550	CS2			65 220	one Z symm observed
S		7630	F2	S		75 220	at 745', S sym. 739-76
S		7750	F2	P		75 220	DS2 763-775
S		7870	CS2			70 220	S region 775.0-810.0
S		7970	CS2			70 220	
S		8100	F2	S		74 220	
S		8125	F2	E			Small Z region 810.0-812.5
S		8280	F2	S		70 220	S region 812.5-828.0
S		8470	PS2			70 220	FS2 region 828.0-974.0
S		8670	PS2			71 220	
S		8870	PS2			66 220	
S		9070	PS2			25 220	
S		9170	PS2			70 220	
S		9370	PS2			65 220	
S		9510	PS2			62 220	
S		9740	F2	P		64 220	R region 974.0-1158.0
S		10000	PS2			75 220	
S		10140	PS2			13 220	
S		10230	PS2			65 220	
S		10320	PS2			11 220	Steep S2 1023-1032
S		10570	PS2			65 220	10°

DDH 79-VX-1 (2 / 8)

Cyprus Anvil Mining Corp.

Structural Log

Logged By: IWM

Code	From	To	Feature	Sym	S_1 Dip Direct.	S_2 Dip Direct.	Description
	10 14	16 20	22 24	26	28 32	34 38	
S		11016.0	PS2			66 2210	
S		11084.0	PS2			80 2210	
S		11103.0	PS2			67 2210	
S		11129.0	PS2			80 2210	
S		11158.0	F2	R		70 2210	PS2 region 1158.0 - 1175.0
S		11175.0	F2	P		75 2210	R region 1175.0 - 1194.0
S		11189.0	PS2			74 2210	
		11940	F2	R			
S		12019.0	PS2			80 2210	PS2 region 1194.0 - 1270.0
S		12122.0	PS2			80 2210	
S		12196.0	PS2			78 2210	
S		12270.0	F2	P		80 220	
		EOH					

CYPRUS ANVIL MINING CORPORATION Page 1 of _____

DIAMOND DRILL CORE LOG Date: _____

Hole Number: 79VX02

Reference Fabric Orientation Diagram:

Project: Vangorda Plateau remap

Location: _____

Claim: _____

Terr.Plane Co-ords.: 6902649.4 N

CAMC Mine Survey: 594239.1 E

Grid Co-ords: _____

Elevation: 1173.75 m.

All symmetry determinations looking

Total Depth: 1397.0 feet = 425.8 metres NW with 52 dipping

Inclination: -90° SW with dip azimuth _____.

Purpose: _____

Reason hole Terminated: _____

Logged by: LCP/GAS Date(s) Logged: _____

Drilling Contractor: ARCTIC

CORE	Size	From	To
Casing		0.0	21 feet
NQ		21	1397 feet

Collar Cased and Capped: _____

Hole Cemented: _____

Steel down hole: _____

Started: _____ Completed: _____

Cyprus Anvil Mining Corp.

Diamond Drill Core Log

DDH 79VX02 (2–8)

Date: _____ Logged By: _____

Code	Drillhole	Elevation	Northing	Easting	Units (feet/metres)	R.F.E.	
1	2–8	10–16	17–24	25–32	34–39	41 42	
T	79VX02	1173.8	902649.4	594239.1		52	

Feet

Code	Drillhole	Depth	Zenith Angle	True Azimuth	Comments
1	2–8	10–14	22–26	28–32	34–56
R	79VX02	0 0	180.0	0.0	AT COLLAR
R	79VX02	169 0	172.2	061.0	
R	79VX02	366 0	168.0	58.0	
R	79VX02	569 0	165.0	53.0	
R	79VX02	769 0	163.5	73.0	
R	79VX02	969 0	162.0	61.0	
R	79VX02	1169 0	162.0	68.0	
R	79VX02	1369 0	159.0	68.0	
R			.	.	
R			.	.	
R			.	.	
R			.	.	
R			.	.	
R			.	.	
R			.	.	
R			.	.	
R			.	.	
R			.	.	
R					
R					
R					
R					
R					
R					

Code	Drillhole	Comments, Errant Remarks, Snivellings and / or Lewd Suggestions
1	2–8	10–56

DDH FA79VX2 ~~79VX02~~ (2 — 8)

Cyprus Anvil Mining Corp.
Lithologic Log

Date: _____ Logged By: LCP/GAJ

Code	From	To	Recov.	No.	Unit	Description
1	10 — 14	16 — 20	22 — 24	26 — 28	30 — 34	35
L	000	210		1	#	no core
6.4						
10.35	210	345		2	369	[SB62]
						dk grey to black, soft, non calc, poorly lithoned, phyllite
						Dark PS_2 bands separating m grey micaceous lithons
						Banding on 1-3 cm scale
						Strongly weath to lt orange rusty brown on S_2
						Mod broken, recov ok
36.7	345	1205		3	369	±3 ±9 [SB6±0]
						soft, med m grey to dark med grey, PS_2 foliated to poorly
						lithoned, weakly calcareous, strongly banded in shades
						of grey between m grey and darker grey phyllitic
						a/o has bands of lt med grey granular qtz which
						locally contain calcite and locally contain green
						actinolite(?) and/or minor Po.
						bands generally // S_2 and locally form lithon
						texture
						#9 = 55'-68' is dk grey to black with better developed lithons
						and is very rusty brown weathering locally porous
						Bottom of unit is bottom of surface weathering
						Unit contains Po porphs with qtz pressure shadows
						Core moderately broken locally rubbly as at
						92' & 95' & 107'
						Recovery ok - no significant faults.
						Lower contact gradational partly lithon break / partly
						carbon break

DDH 79VX02

Cyprus Anvil Mining Corp.
Lithologic Log

Date: _____ Logged By: _____

	Code	From	To	Recov.	No.	Unit	Description
	1	10 14	16 20	22 24	26 28	30 34	35
46.9	L	1205	1540		4	SBZO	
							dk grey, mod soft to mod hard, well lithoned phyllite contains well developed granular qtz, calcite, actinolite or epidote, pyrite & v. minor po bands. Bands finely laminated and generally 2-5 cm thick separated by dk grey to black noncalc ± stripes 1-2 cm thick. Unit is 50% (40-70% depending on location)
							core intact locally mod broken, no faults, good recov
62.5	L	1540	2221	5	5	SA16	9 minor
							dk grey to black hard (can slightly scratch with knife) PS, foliated, non calc (but strong "dolo flush") siliceous phyllite or carb micaceous qtzite. Strongly laminated w/ black ± folia between thin more qtzose lithons.
							"Weathers" to grey with slight bluish tint (on cut surf)
							contains fine subparallel specks of py and lesser po - also mm sized "bands to lenses" of coarser white qtz with dissem po
							overall 5= ≈ 1%, and ≈ 1/2 is in qtzose bands
67.7							intact
	L	2221	2223		6	SDO	(SA16) 70:30
							3 bands of SD with sharp ± 11 contacts - 2-4" thick
54.6	L	2223	3105		7	SA16	9 minor
							same as #5 but have minor black chert nodules - dissem 5=
							dominantly po locally get more of the qtz-po stringer/bands. *
							Intact minor rubble & tr gouge at 263' no significant faults
							*Than unit 5 but still less than SA19

DDH 79VX02 (2 — 8)

Cyprus Anvil Mining Corp.
Lithologic Log

Date: _____ Logged By: _____

	Code	From	To	Recov.	No.	Unit	Description
	1	10 — 14	16 — 20	22 — 24	26 — 28	30 — 34	35
95.7	L	3105	3140		8	3GP	
							mod soft, mgrey to mod dk grey, PS_2 foliated, non calc phyllite
							minor gtzose bands containing actinolite(?) + some po up to
							1 cm thick - not lithonded - homogeneous - lighter than
							above - no dolo flash.
							Intact
98.1	L	3140	3220		9	SA10	9 minor
							dk grey to black, hard siliceous carb. phyllite, with gtzose
							bands to 5 cm thick with gtz, calcite, minor po. locally
							laminated; shaving lithon texture -
							similar to #7 but calcareous sections
							Intact
102.7	L	3220	3370		10	3G09	minor
							med grey to dk grey, mod soft, PS_2 foliated generally
							non calc phyllite
							Contains PS_2 striping color banding in shades of grey -
							locally with fine S, II lamination between stripes.
							Very minor calcite of small percentage of rare gtzose
							bands
							dominantly Po porphs.
							Intact
105.3	L	3370	3455		11	SA16	9 minor (3G09 minor) 90:10
							dominantly siliceous phyllite like #7 with 5-10 cm
							interbands of phyllite like #10 - minor irregular
							chert nodules - dominantly po in porphs and in
							gtzose bands - good dolo flash.

Intact.

DDH 79VX02

Cyprus Anvil Mining Corp.
Lithologic Log

Date: _____ Logged By: _____

	Code	From	To	Recov.	No.	Unit	Description
110.6	L	3455	3630		12	3609	(SA169minor) 90:10
							dominantly soft banded med dk grey non calc phyllite - Banding in lighter grey gtzose material which locally forms lithons.
							Scattered Ro porphs some with Py as inclusion trains in the porph
							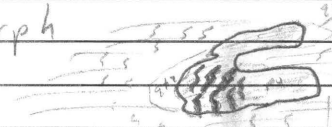
							This soft phyllite has blk chert nodules locally
							Unit contains interbands of med dk grey siliceous non calc phy as above
							Small 383 band 2" @ 352
							Intact
113.3	L	3630	3720		13	SA116	9minor → SB216
							dk grey to black, hard, lithoned, non calc Phyllite lithons marked by more gtzose bands seperated by dark Py stripes - no calc silicates seen. - has no porphs as in #12
							Seperated from last unit by being harder and slightly darker overall.
							intact
							minor ½" 38/50 interbands in last 1'
113.7	L	3720	3730		14	3833	
							Thick gtz calcite vein at upper contact
							Intact.

DDH 79VX02

Cyprus Anvil Mining Corp.
Lithologic Log

Date: _____ Logged By: _____

	Code	From	To	Recov.	No.	Unit	Description
		1 10 14	16 20	22 24	26 28	30 34	35
115.0	L	373 0	377 5		15	SA16	
							Same as #13
							upper contact rubble & incipient gouge - no major faults
							moderate to intense "d.l. flash"
							otherwise intact
122.5	L	377 5	403 5		16	3G0	±9+1
							m. grey to dk grey, mod soft to hard, pS$_2$ Fol., non-calc phy. - "d.l.b flash"
							Banded in shades of grey 5-15 cm bands, generally darker grey bands are harder
							Scattered po porphs flattened in S$_2$
							Contains minor qtz-se bands with dissem po.
							Intact.
127.)	L	403 5	419 0		17	SA16	9 minor ± 3 minor
							Dk grey to black, hard, pS$_2$ foliated, noncalc, phyllitic
							Strong "d.l.b flash"
							Distinctive thin "beaded" mm thick qtz-se-po bands
							414-415.5 contains thin D$_2$ folded calcite bands/lamine
							Intact
							PO porphs
131.6	L	419	432 0		18	3G0	"calc-silicaty"
							(Lower contact gradational arbitrary ± 10')
							mod soft med grey pS$_2$ foliated non calc to slightly calc phyllitic distinguished by comp banding // S$_2$ with dk grey phyllitic bands and slightly lighter qtz-carb po ± calcite bands (generally, 1cm - 5 or 10 cm thick)
							More po in qtz-se bands than phyllitic bands.
							"Calc-silicaty" means green mineral is more apparent in these rocks - Intact

DDH 79VX02 (2–8)

Cyprus Anvil Mining Corp.
Lithologic Log

Date: ____ Logged By: ____

	Code	From	To	Recov.	No.	Unit	Description
	1	10–14	16–20	22–24	26–28	30–34	35
166.3	L	4320	5457		19	3GP	Calc silicaty ±3
							very similar to last unit – in addition to fine granular qtzose
							bands – get bands that are coarser qtz actinolite ± calcite ± po.
							I.E. unit is 1st appearance of bands with coarse very
							mottled green/white texture and green selveges – minor epidote or garnet! associated.
							commonly these bands form good lithon texture – Coarse
							texture and irregular appearence may imply these were pre D_2 veins – They look like what we call "Stringers."
							Moderately soft, ps_2 foliated, banded in shades of grey
							(with greenish tint) very slightly calcareous (in bands) phyllite
							Intact
168.2	L	5457	5520		20	3GO	BXA
							coherent fault rock in above lithology – S_2 disrupted so that
							it dips steeply – steep fractures throught –
							qtz vein frags in flt rx
							overall orientation 30/000
							recvy ok
173.1	L	5520	5680		21	3GP	"calc silicaty" minor
							mod soft, med grey, ps_2 fol. noncalc Phyllite.
							Comp banded in shades of grey: light gran qtz
							± minor diss act + po, no calcite bands 1-2cm thick (up
							to 5) no lithons; grey bands soft N.C. phyllite (3-5cm thick)
							get intense calc ± po crackle bxa cutting rocks.
							Intact

DDH 79VX02

Cyprus Anvil Mining Corp.
Lithologic Log

Date: Logged By:

Code	From	To	Recov.	No.	Unit	Description
174.5 L	568 0	572 0		~~22~~	3G	BXA + GOUGE
						broken 10φ in BXA - upper contact at 26/000
						steep fractures & shears thru zone
204.8 L	572 0	672 0		23	3G0	→ (3G9) 80:20
						mod soft, non calc, PS_2 foliated, med grey
						Phyllite-
						Contains very sparse fine qtzose interbands with minor fine
						dissem po & act. (make up ~ 10-20% of unit) within
						"matrix" of m. grey & lt grey banded phyllitic rock.
						First 30' downhole color lightens, from med dk grey
						above 600' to med grey below that.
						Broken to 576' recvy ok.
						576-604 = Intact
						604-610 = v. broken to rubbly ~ 2/3 recvd.
						610-672 = intact
						minor 10φ S_2 foliaform qtz veins with chl selvedges -
						veins up to 15 cm thick
220.1 L	672 0	722 5		24	3G0	"calc-silicaty" minor ± 3
						Same as #19 - has coarse mottled qtz act ± calcite
						± po bands (calc weaths tan) - base phyllite is just
						like unit 23. - unit contains 5-10% of these bands
						TOI-695 = intact
						695-702 = v. broken to rubbly - appears related to
						steep fracts 0-30° to C.A. - recvy ~ 80%

These are essentially the same phyllites as in A7 and differ from the above phyllites (vs. ~419' down) only in the lack of the coarser qtz act "strings/bands"

C.A.M.C. 1981 - E - 3A

702-722.5 = mod broken to rubbly, recvy ok

DDH 79VX02 (2 – 8)

Cyprus Anvil Mining Corp.
Lithologic Log

Date: ____ Logged By: ____

Code (1)	From (10–14)	To (16–20)	Recov. (22–24)	No. (26–28)	Unit (30–34)	Description (35)
232.8 L	722 S	764 0		25	3G09	
						med dk grey, ps_2 fol, non calc, mod soft, Phyllite
						Interbanded dk grey phyllitic (2-40cm) & lighter grey (5mm-10cm)
						very fine qtzose - some with light green mineral and
						most with fg. dissem po.
						Unit slightly darker than normal 3G0
						intact
238.6 L	764 0	783		26	3G0	
						mod soft, med grey, ps_2 fol, non calc phyllite
						abundant qtz veining going down in interval (last 1/3)
						mod broken to very broken toward EOI
						last 1' is rubble incip. gouge. - IND maybe ∥ to S_2
						but S_2 is disrupted here.
						As unit 23
could be lumped 242.5 L	783	796		27	3G09	minor 1 minor
						Slightly darker than above unit and mod soft
						to mod hard ∴ a bit harder - boils down
						to a transition into underlying unit - involved
						with much qtz calcite crackle bxa
						786-787 ≈ 1' rubble otherwise intact good recvy.
251.4 L	796 0	825		28	SA16	9 minor [3G916 minor] (ie. a little light for SA)
						dk grey to black ps_2 fol, hard, non calc phyllite - strong
						dolo flash. "weath" to pale grey with v. slight
						bluish tint - minor po flecks and fg. D_2 folded qtz po
						bands locally they form small lithons or "headed comp

banding." ⇒  ps_2. Po has rusty brn weath-
like carbonaceous colors up the hole.
intact - minor rubble no faults

DDH 79VX02 (2–8)

Cyprus Anvil Mining Corp.
Lithologic Log

Page 11 of ____

Date: ____ Logged By: ____

Code (1)	From (10–14)	To (16–20)	Recov. (22–24)	No. (26–28)	Unit (30–34)	Description (35)
L	8250	9150		29	3G0	±9 (1000 gpo chl)
						mod soft to mod hard, locally hard, dark grey to
						med grey, PS_2 foliated non-calc Phyllite
						Banded in grey & dk grey on scale of 5–50 cm.
						Lighter bands tend to be more qtzose and
						contain fine dissem actinolite(?) (not readily
						noticiable except on wet core) darker bands
						are phyllitic-micaceous – near 887 have 1' that
						contains calcite bearing bands. also these bands
						contains biotite – otherwise non calc.
						Lower contact gradational – darkening and increase
						in bio qtz act(?) calcite bands
						core is mod broken to intact – recvy ok
						865 ± 877' contains significant proportion of chl chl po
						veins up to 15 cm thick ∥ S_2 – ≈40% of that section
L	9150	9450		30	3G93	calc silicatey (3F9 calc silicatey) 70:30
						dk grey to black, mod soft to mod hard, variably calc phyllite/
						marble.
						Very phyllitic portions are dk grey to black PS_2 foliated – interbands
						with good lithon text of granular qtz + act + bio + epidote(?) ± calcite
						In places these calc silicates are joined by finely xln dk grey
						mbl – local boudinage of silicate bands in mbls.
						Calc sil & mbl. assemblages are 10–50 cm thick commonly
						Resembles rocks immed below Doal Lk fault
						at SW End of Grum – (as seen in 82A19 150–156m typo box)

278.80

287.9

Intact.

C.A.M.C. 1981 – E – 3A

DDH 79VX02 (2 — 8)

Cyprus Anvil Mining Corp.
Lithologic Log

Date: _____ Logged By: _____

Code	From	To	Recov.	No.	Unit	Description
1	10 — 14	16 — 20	22 — 24	26 — 28	30 — 34	35
L	945 0	983 0		31	3GD	Bio~calc sil
						mod hard to mod soft, med dk grey dominantly PS_2 foliated but
						locally with good lithons, visibly calcareous phyllite, S_2 foliation
						dk grey to black.
						Overwhelming texture is a fine homogenous calc-sil assemblage. w/1-5mm
						Spaced stripes of act(?)or chl(?)(regreen min) + bio + minor po ± calcite
						(Calcareous bands are more biotitic) locally see good thicker comp banding
						probably related to original comp banding on several cm scale.
						Has an unusual salt and pepper texture to the calc sil mineralogy
						that just doesn't occur much.
						This is a dominantly calc silicate rock rather than
						the usual patchy minor calc sil development, yet its not
						a good 3D lithology — yet.
L	983	1048		32	3G0	→(3G9)(3GD) 50 : 50 calc sil/non calc sil
						heterogenous interbanded unit - background phyllite is
						mod soft to soft med grey non calc PS_2 foliated smooth
						cutting Phyllite (ie 3G0) interbanded is calc silicate
						assemblage consisting of bio + act/chl(?) ± calcite
						that dominantly has same homog microlithon texture as #31
						and locally develops a good macrolithon texture - Interbanding
						on 10-50cm scale. proportions are 50/50
						As a whole unit becomes progressively more carbonaceous
						down hole + calc sils are harder to see down hole but this
						may just be masking since theres still calc sil there.
						Differs from above unit mainly in having substantially
						thicker phyllitic interbands (ie its 50% phyllitic as opposed to 10% or so in #31)
						Intact.

299.5

of coarse calc-sil / fine calc-sil/phyllite

might lump these 2 units at least mentally.

319.3

DDH 79VX02 (2 … 8) Feet

Cyprus Anvil Mining Corp.
Lithologic Log

Date: 26 July 84 Logged By: _____

	Code	From	To	Recov.	No.	Unit	Description
		10 14	16 20	22 24	26 28	30 34	35
319.9	L	1,04,80	1,04,98		33	3F9	(3G93) 50:50
							v. dk grey to black interbanded calc phyllite and finely x/n dk grey mbl / good mbl bands 1cm to 5 cm thick - some bandinage of phyllite interbands. Minor py ± po disseminated mod hard to hard. Intact.
326.6	L	1,04,98	1,07,20		34	3G9D	
							similar to #31 - has stronger grey color and less readily visible biotite homogenous, ps, foliated, (but with good tiny microlithon texture) only locally calc mainly non-calc, moderately hard. med grey calc silicate bearing phyllite intact
333.0	L	1,07,20	1,08,95		35	3G9	calc silicate / borderline ± 3 (3F9) 80:20 mod hard, to hard dk grey to black PS, foliated to locally laminated Granular gtzose bands with act(?) bio ± calcite. Common thin beaded gtz bands. Interlayered dk grey finely x/n mbl - in bands 5-10 cm thick forming sections to 50 cm thick Granular gtzose bands are 15-20% of 3G9 and are 15 cm thick ± finely laminated internally, phyllite contains minor disem po > py < 1% total intact
			1,10,2				

DDH 79VX02 (2–8)

Cyprus Anvil Mining Corp.
Lithologic Log

Date: ____ Logged By: ____

Code	From	To	Recov.	No.	Unit	Description
1	10–14	16–20	22–24	26–28	30–34	35
L	1089 S	1102 0		36	3G0	"calc-silicaty" ±3 → 3GD as in unit #31
335.8						medium greenish grey mod soft to mod hard ps_2 foliated,
						locally slightly calcareous calc silicate bearing phyllite,
						S_2 folia med dk grey uniformly, cut surface generally shows fairly regular thick interbanding of internally homogenous green & grey bands which in detail have very fine mineral lamination ∥ S_1 forming microlithons or lithons
						calc sil assemblage is qtz + act + bio ± calcite with a fine microlithon
						texture in detail –
						Diffusely color banded in grey and green/brown on scale of 5–10
						cm
						Intact
						at 1091' = 10 cm non calc green rock ≡ 3B2
338.7	L 1102 0	1111 S		37	3F9	(3G9 ± 1) 60:40
						non calc, mod soft to hard, dk grey to black, ps_2 foliated homogenous Phyllite
						medium interbanded with hard, dk grey, finely X/n – internally thinly
						banded to laminated
						Core is intact to 1103.5
						1103.5 – 1108 = mod broken to rubbly – not significant fault
						1108 – EOI = intact to mod broken
357.4	L 1111 S	1173 0		38	5A16	
						dk grey to black, hard non calc ps_2 foliated phyllite –
						strong "dolo flash" laminated to thinly banded ∥ S_2
						mdk grey qtz ose microlithons & dk grey – blk S_2 folia –
						upper portion more "striped" lower portion more homogenous
						in detail with dull grey phyllite (rather than bluish grey) with internal bead texture
						along PS_2 (→ boudinage)
						This unit is overall homogenous in detail thinly laminated ∥ S_2
						and this is PS_2 striping used previously

this unit actually has less S = than normal for 5A19 – local py bands seem to be fracture controlled rather than original.

this has been called homogenous in this hole and will be called homogenously medium banded in future

laminated: to 1 cm thin to 5 cm medium ± 20 Thick >20 cm ↑ scale of banding

Core intact to 1135.5
1135.5 – 1137: rubble & gouge
1137 – 1154 mod broken to rubbly 20–30 cm rubble zones S_2 at very acute ∢ to core axis, polished surfaces at ~25° to CA slicks rake 70–80°
1154 – EOI = intact

DDH 79VX02

Cyprus Anvil Mining Corp.
Lithologic Log

Date: _____ Logged By: _____

	Code	From	To	Recov.	No.	Unit	Description
	1	10 14	16 20	22 24	26 28	30 34	35
359.2	L	1,1,73 0	1,1,79		39	3B3	B10 minor
							fine grained, med green slightly to mod calc ± bio minor
							Upper contact with SA is gradational with fading
							from dk grey to green over 1' - in detail contact is
							sharp and fade out zone is bleaching of phyllite -
							Lower contact is faulted (minor fault at 45° to CA)
							intact
367.5	L	1,1,79 0	1,2,06 0		40	5A16	
							overall homogenous PS_2 fol non calc siliceous phyllite -
							moderate "dolo flash" - not strongly PS_2 striped as
							above unit - similar base of # 38
							intact
369.9	L	1,2,06	1,2,14		41	10Ø09	minor
							lower contact 11 S_2 upper xcuts a little
388.7	L	1,2,14	1,2,56		42	5A169	minor
							ps_2 foliated, generally overall homogenous - minor thin granular
							$qtz^{py \pm po}$ bands - local small black chert nodules
							closer to PS_2 striped -
							non calc but moderate "dolo flash"
							intact
386.5	L	1,2,56	1,2,68 5		43	5C3	(3D) 95:5
							3D is 1.5' at EOI
							foliated, med fine grained, m dk green chl ± bio (minor) phyllite / metabasite
							1267.5 is pale green pale brown banded very hard siliceous altn
							halo presumed to be altered silicified phyllite next to metabasite
							intact

DDH 79VX02 (2–8)

Cyprus Anvil Mining Corp.
Lithologic Log

Date: ____ Logged By: ____

Code	From	To	Recov.	No.	Unit	Description
1	10–14	16–20	22–24	26–28	30–34	35
392.3 L	1268 5	1287 5		44	3G0	±9 minor
						med grey to m dk grey mod soft to mod hard, PS_2 foliated
						non calc phyllite – S_2 folia are shiny dark grey
						Dissem flattened po porphs.
						overall homogenous internally thinly laminated in shades of
						grey $\parallel S_2$
						mod broken essentially intact
403.1 L	1287 5	1323 0		45	5C3	±$ (3B3 minor ± B10) (3D-1) (3G48) 50:20:15:15
						Central portion of unit is strongly foliated alternating
						lt grey dk green irreg. lam altered 5C metabasite = Leopard Rock.
						Upper 10' is homogenous weakly calc – dk green 3B
						with patchy bio development
						Interbanded with both is strongly laminated in
						shades of pale brn – pale green, very hard, locally slightly calcareous phyllite
						exactly the same as the bleached altered phyllite
						noted at 1267 – top 1.5' and 1296'–1298'
						In lower 15' are thick interbands of non calc,
						pale med to grey green, homogenous to ghostly laminated,
						mod hard, musc-chl phyllite that may be altered
						phyllite of a different type at 1314–1319' & 1320.5–1323.
						Intact.
						= Metabasite complex with related alteration –
						alteration may imply all were originally intrusive
404.6 L	1323 0	1328 0		46	3G0	±9 minor
						non calc, mod soft to soft, m. grey to med dk grey PS_2 striped/thinly
						banded to laminated phyllite – striping p soln related
						intact

DDH 79VX02 (2 — 8)

Cyprus Anvil Mining Corp.
Lithologic Log

Date: _____ Logged By: _____

Code	From	To	Recov.	No.	Unit	Description
	10 — 14	16 — 20	22 — 24	26 — 28	30 — 34	35
412.6' L	13280	13540		47		
						hard to soft, incoherent fault bxa clasts ranging widely in size to up to 1' or more in med grey finely ground rock flour matrix - moderately siliceous (as are the pieces)
						fault probably overall 20-30° to CA based on
						internal shears - upper contact is 30/000 (sub horizontal slicks)
						bxa frags cut by tension gash → crackle bxa that
						may be related to matrix silicification
						intact, recvy ok
415.5 L	13540	13645		48	3G0	±9 minor (5C3)
						Same as #46 also as frags in fault - minor 5C3 at
						top for 1' minor fault Bxa at top.
						minor rubble near top otherwise intact
L	13645	13850		49	5C3	±bio (3G48) tr
420.5						homogenous to poorly banded/laminated // foln, - slight
						relict ign text., med green to yellowish green., mod soft to
						soft
						Contains thin interband of greenish grey altered phyllite
						at 1367
						From 1369 to 1377 is fault BXA involving metabasite
						bull qtz and phyllite frags / clasts at ~20° to CA and with
						subhorizontal slicks
						recovery ok - fault zone is rubbly locally,
						Since fault within unit presumably its small.

C.A.M.C. 1981 - E - 3A

DDH 79VX02

Cyprus Anvil Mining Corp.
Lithologic Log

Date: _____ Logged By: _____

425.7

Code	From	To	Recov.	No.	Unit	Description
L	1380	1397	0	50	360	(SC3$)(SD4$) 60:20:20
						thick to medium interbanding of 360 phyllites similar
						to those above fault (unit) and SC3$ metabasite
						and SD4$
						m. Grey 3G phyllite is mod hard - slightly harder than
						normal - related to faults?
						Intact to mod broken at end. local crackle
						brec with qtz filling - some internal units seperated by
						minor faults.
						1397 = EOH!
						Top of hole to ~420 is carb siliceous phyllite with
						some probable Vangorda calc phyllites to 155'
						Mye/Vangorda body at 420 with carb rx being SA.
						To ~915' is garden variety 3G with carb phy interbands
						To 1111' is calc sil minor mbl verially carbonaceous verially
						siliceous package.
						To 1258' is siliceous carbonaceous package
						to EOH is 3G with metabasite interbands. -
						Section of Mt Mye fm from 420 down compares
						fairly well with 456-75-14 at Faro.

DDH 79VX02 (2 Feet 8) Cyprus Anvil Mining Corp. Page 19 of _____

Structural Log Date: _____ Logged By: _____

Code	From	To	Feature	Sym	S_0 Dip Direct.	S_1 Dip Direct.	S_2 Dip Direct	Description
1	10 14	16 20	22 24	26	28 32	34 38	40 44	
S		270	CS2				58	
S		37	CS2	S			67	
S		54	CS2	Z			65	
S		72	CS2				71	CS_N = 42/070
S		82	PS2				63	CS_N = 35/050
S		102	PS2				75	CS_N = 35/020
S		115	PS2				65	→ CS_2
S		125	CS2	S			58	
S		137	CS2	S			72	Z's nearby
S		151	CS2	S			65	
S		161	AS2				60	
S		177	PS2				59	→ CS_2
S		196	PS2				76	CS_N = 45/020
S		204	PS2				70	CS_N = 35/000
S		212	PS2				70	CS_N = 33/000
S		232	PS2				68	
S		246	PS2				62	
S		262	PS2				60	CS_N → fract clev. = 38/000
S		277	PS2				80	
S		291	PS2				73	
S		306	PS2				80	→ CS_2 CS_N = 25/000
S		320	CS2	S			80	
S		327	PS2				83	
S		347	CS2				85	→ PS_2
S		359	CS2	S			75	
S		386	CS2	S			78	
S		391	PS2				70	weak CS_N 35/000
S		405	CS2	S			84	
S		412	PS2				82	→ CS_2
S		426	PS2				72	
S		443	PS2				71	
S		462	PS2				82	fract. clev 55/000
S		482	PS2				82	
S		492	PS2				85	
S		507	PS2				86	
S		527	PS2	Z			75	→ CS_2

DDH 79VX02 (2 8) Cyprus Anvil Mining Corp. Page 20 of _____

Structural Log Date: _____ Logged By: _____

Code	From	To	Feature	Sym	S_0 Dip Direct.	S_1 Dip Direct.	S_2 Dip Direct	Description
	10 14	16 20	22 24	26	28 32	34 38	40 44	
S		1542	PS2				85	
S		1555	PS2				70	
S		1578	PS2				70	
S		1592	CS2	S			72	?able place for symmetry
S		1612	PS2				70	
S		1620	CS2	S			68	
S		1632	PS2				70	
S		1649	PS2				90	
S		1659	PS2				74	CS_N 39/160
S		1664	CS2	S			77	
S		1687	PS2				80	some QKS nearby
S		1703	PS2				90	→ CS_2
S		1713	PS2				75	CS_N = 30/180
S		1724	PS2				75	
S		1729	PS2				01	} related to CS_N forming event → faulting out fold hinge?
S		1734	PS2				30	
S		1738	PS2				67	CS_N = 15/045
S		1744	PS2				75	CS_N 35/040
S		1753	PS2				80	
S		1767	PS2				75	
S		1810	AS2				64	CS_N 45/340
S		1916	PS2				75	CS_N 35/040
S		1986	PS2				40	
S		1910	PS2	S			81	→ CS_2
S		1932	PS2				85	
S		1946	PS2				72	CS_N 50/000 CS_{N+1} 50/180
S		1960	PS2				83	
S		1978	PS				75	
S		1985	PS2				85	CS_N = 40/180
S		2012	PS2				85	CS_N = 60/250
S		2017	PS2				75	
S		2037	PS2				85	→ CS_2 CS_N = 67/???
S		2044	PS2				80	- CS_N 40/000
S		2061	CS2				90	nice F_2 folds but H Sy sheet dip ~45°
S		2077	CS2	S			85	? symm close to H
S		2095	CS2	S			78	good sym.

C.A.M.C. 1981 - E - 4

DDH 79.V.X.02 (2 – 8)

Cyprus Anvil Mining Corp.

Structural Log

Date: _____ Logged By: _____

Code	From	To	Feature	Sym	S_0 Dip Direct.	S_1 Dip Direct.	S_2 Dip Direct	Description
1	10 – 14	16 – 20	22 – 24	26	28 – 32	34 – 38	40 – 44	
S		1,015	P S2				77	CS_N = 60/180
S		1,038	P S2				88	
S		1,057	C S2	S			75	
S		1,077	P S2				90	
S		1,092	P S2				78	
S		1,117	P S2				85	
S		1,132	P S2				72	CS_N = 55/160
S		1,141	A S2				65	post D_2 fold axis 30/000
S		1,157	P S2				75	
S		1,163	P S2				80	weak CS_N 30-45/325
S		1,190	P S2				85	CS_N 60/160
S		1,198	P S2				85	
S		1,202	P S2				73	CS_N 25/000
S		1,218	P S2				75	CS_N 50/000
S		1,236	P S2	S			80	CS_N 32/000
S		1,245	P S2				79	
S		1,272	P S2				60	
S		1,282	P S2				85	PS_2 on post D_2 fold long limb CS_N - 55/180
S		1,310	P S2				80	
S		1,313	P S2				83	CS_N 45/000
S		1,321	C S2	S			69	
S		1,345	P S2				58	
S		1,362	P S2				51	
S		1,381	P S2				75	
S		1,396	P S2				75	

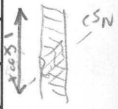

DDH FA79VX2 (2 … 8) Cyprus Anvil Mining Corp. Page 22 of _____

FEET

FAULT Structural Log Date: _____ Logged By: _____

Code	From	To	Feature	Sym	S_0 Dip Direct.	S_1 Dip Direct.	S_2 Dip Direct	Description
1	10 14	16 20	22 24	26	28 32	34 38	40 44	
F	1210	1250	2B					
F		920	R					
F		950	R					
F		1070	R					
F	1205	1540	1B					
F		2630	1RG					
F		3730	R1G					
F	5455	5520	FX			300 000		
F	5550	5680	3X0					
F	5680	5720	XG		2600			
F	5720	5760	B					
F	6040	6100	3BR	6				
F	6955	7020	3BR	8				0-30° to CA
F	7020	7225	2BR					
F	7640	7820	2B					
F	7820	7830	G			99 9999		
F	7860	7870	R					
F	7830	7960	2X0					
F	8250	9150	1B					
F	1103	1108	2BR					
F	1108	1111	1B					
F	1135	1137	RG					
F	1137	1154	2BR					Steep S_2 — faults at 25° to CA steep slicks
F		1179	1F					45° to CA
F	1268	1287	1B					
F	1328	1354	3FX		300	000		20-30° to CA sub horiz slicks
F		1355	FXR					
F	1369	1377	FXR					20° to CA sub horiz slicks
F	1380	1397	1B					

C.A.M.C. 1981 - E - 4

plot @ 1000 scale

CYPRUS ANVIL MINING CORPORATION

DIAMOND DRILL CORE LOG

Hole Number: 79-1X-

Project: VANGORDA

Location: VANGORDA

Claim:

TM Terr. Plane Co-ords.: 6902649 N

594 E

Grid Co-ords.:

Elevation: 4373'

Total Depth: 1397.0

Fabric Orientation Diagram:

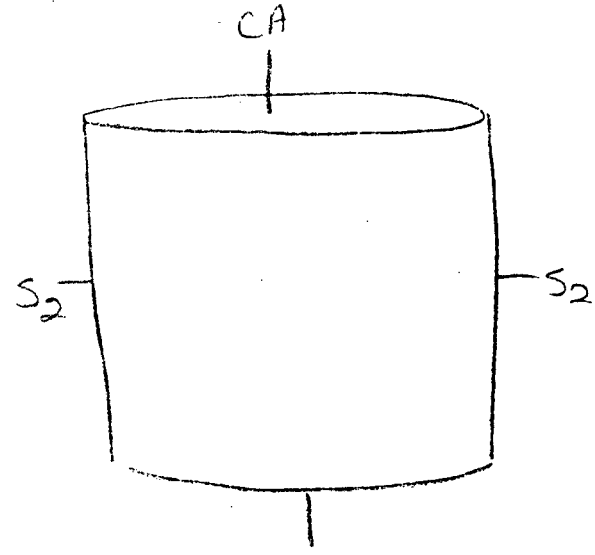

All symmetry determinations looking NW with S_2 dipping SW with dip azimuth 220°.

Purpose:

Logged by: JWM Date(s) Logged:

Drilling Contractor: NDD

Core: Size From To Collar Cased and Capped:

Started: Completed:

Cyprus Anvil Mining Corp.

Diamond Drill Core Log

DDH 79-VX-2

Code	Drillhole	Elevation	Northing	Easting	Comments
1	2 8	10 16	17 24	25 32	34 4
T	79-1V1X1-R2	1173.75	9036491.4	5941239.1	FEET

Code	Drillhole	Depth	Zenith Angle	True Azimuth	Comments
1	2 8	10 14	22 26	28 32	34
R	79-1V1X1-R2	0 0	161.0	.	AT COLLAR
R	79-1V1X1-R2	1169 0	172.2	061.0	
R	79-1V1X1-R2	3166 0	168.0	058.0	
R	79-1V1X1-R2	5169 0	165.0	053.0	
R	79-1V1X1-R2	7169 0	163.5	073.0	
R	79-1V1X1-R2	9169 0	162.0	061.0	
R	79-1V1X1-R2	11169 0	162.0	068.0	
R	79-1V1X1-R2	13169 0	159.0	068.0	
R		.	.	.	
R		.	.	.	
R		.	.	.	
R		.	.	.	
R		.	.	.	
R		.	.	.	
R		.	.	.	
R		.	.	.	

Code	Drillhole	Comments, Errant Remarks, Snivellings and/or Lewd Suggestions
1	2 8	10

DDH 70 - VX - 2 (2 / 8)

Cyprus Anvil Mining Corp.
Lithologic Log

Logged By: JWM

Code	From	To	Unit	Code	Description
1	10 14	16 20	22 23	25 27	
L	00	210	01	#	OVERBURDEN
L	210	1242	02	5B2	increasing carbon content towards
					EOI, variably calcareous
L	1242	1543	03	5A0	3 not typically 5A at beginning of
					interval. → 5B2, increasing
					carbonate content towards
					end of interval. → 5A3 po present
L	1543	2032	04	5A9	as small blebs
					variably calc. throughout,
					typical 5A, po ≥ py at beginning of
					interval increasing to po > py.
					typical thin seams + threads silica
					throughout.
L	2032	2220	05	5A3	1 As in unit 04 increasing silica
					carbonate content.
L	2220	2229	06	5D0	
L	2229	2576	07	5A9	As in unit 04, po > py in seams
					foliaform, blebs + crystal form.
					Both in this unit and 04, locally
					(over 1-3 mm) grades to 4A0 -
					possibly some Zn grades of 1-2%
					over these small intervals.
L	2576	2725	08	5A9	more phyllitic, generally non calc.
					foliaform po, po > py.
L	2725	3032	09	5A9	As in unit 07 po >> py, po ≈ 1%
					total over interval.
L	3032	3140	10	5B2	po
L	3140	3213	11	5A9	as in unit 09, variably calc
L	3213	3520	12	5BA	carbonaceous 5B po >> py, po ≈ 1%
					overall, 50% 5B2 throughout
L	3520	3721	13	5B2	as in unit 12, slight increase
					[illegible] 5B, po >> py etc., varb. calc.
L	3721	3735	14	5D3	
L	3735	4190	15	5A9	[illegible] "coarser grained" - not as phyllitic
					[illegible] >> py po ≈ 1-2% overall - larger blebs
					[illegible] appearing as whips near end

DDH 79-VX-2 (2 / 8)

Cyprus Anvil Mining Corp.

Lithologic Log

Logged By: JWM

Code	From	To	Unit	Code	Description
1	10 14	16 20	22 23	25 27	
7.7	4190	5178	15	5B0	locally to 5B2 trace sulphides?
					generally calcareous (variable) throughout.
					chloritic development although
					pervasive is somewhat sporadic &
					localized
7.8	5178	5183	16	5D5	
8.0	5183	5454	17	5B0	As in unit 15
6.2	5454	5487	18	5B0	clay + gouge - probable fault zone.
7.2	5487	5683	19	5B0	As in unit 15, 17 - minor sulfides
					py = po ≈ 0.5%
3.2	5683	5703	20	5A0	graphitic gouge zone
3.8	5703	5815	21	5A0	→ 5B2
7.2	5815	7260	22	5B0	Large slug 5B minor localized
					development chlorite, variably calc.
					(not very) local grades to 5B2
1.3	7260	7496	23	5A9	po > py ≈ 1% total po+py as
					foliaform generally non-calcareous.
8.5	7496	7820	24	5B0	→ 5B2 increasing chlorite, generally
					non-calc.
8.4	7820	8327	25	5A9	po>py, variably calcareous
3.8	8327	9190	26	5B0	2 (3?9?) as in unit 24,
					abundant, sporadic chlorite development
					sulfides = trace but po>py, variably,
					(minor) calcareous throughout.
					not distinct from any 5B
					- possibly greater C
.1	9190	9199	27	0Q0	
0.4	9199	9444	28	5A9	3 total sulfides ≈ <0.5?, 10-15 CO_3
					throughout Po ≈ Py (Py > Po?)
					locally goes to silicated marble
					sulfides - as thin seams, fracture
					fillings foliaform "lenses", small blebs etc.
					locally chloritic
37.9	9444	9830	29	5DC	graphitic partings, variably calc.
					chlorite extensively developed - esp.
					along S, trace sulfides.

DDH 73-VX-2 8 | Cyprus Anvil Mining Corp. | Page 3 of 9

Lithologic Log | Logged By: WM

Code	From	To	Unit	Code	Description
1	10 14	16 20	22 23	25 27	
	191830	191952	310	5A1?	as in unit 28, total sulfides
					>, Po>Py, increase in chlorite
L	191952	1101010	311	5DC	as in unit 29, abundant fine
					grained, foliaform po, calcareous
					throughout (5B?6)
L	1190110	1101370	312	3G6	? similar to last reported 5B
					increasing graphite towards end
					of interval (5B6?)
L	1101370	1061700	313	3C4	? Similar in composition + texture
					to unit 29 + 30 [5B23 w 20% 5A3]
L	1061700	1018700	314	3E3	[(5A3) w 30% 5B2]
L	1018700	1019944	315	3C6	→ 3CD? similar to 5D
L	1019944	1117300	316	3E6	variably calcareous throughout.
					total sulfides ±10-15% at any
					given interval py ± po (py ? po?) 5A?
					as blebs + foliaform seams locally
					nodules 2A - INTERESTING INTERVAL
L	1117300	1117922	317	3C3	→ 3D
L	1117922	1210744	318	3E6	as in unit 36, less total sulfides,
					PSZ [5A0]
L	1210744	1211506	319	0G10	
L	1211500	1215577	410	3E6	(5A0) As in unit 36 + 38 locally to 2A
L	1215577	1216180	411	3C6	3 w/ minor 3B5 (5C3?)
L	1216180	1218778	412	3E6	As in unit 40 (5A6?)
L	1218700	1219855	413	3D10	boundry good interval 3D [3D4 & 3D1 50:50]
L	1219855	1321300	414	3E6	As in unit 41, zebra striped
L	1321300	1316193	414	3E6	not the same as above 3E
					only locally contains significant sulfides
					generally "structureless", "wispy"
L	1316400	1318120	415	3C3	As above w/ 30% 3B5
L	1318120	1319300	416	3E6	
L	1319300	1319544	417	4C3	* ← NOTE (ZL) (104) ← 3B54
	1319544	1319700	418	3E0	
					DIVISION BETWEEN 3G + 5B is
					very ad hoc. — mainly because
					then unit?

DDH 79-VX-2 (2 / 8) Cyprus Anvil Mining Corp. Page 6 of 8

Structural Log Logged By: JWM

Code	From	To	Feature	Sys	S_1 Dip Direct.	S_2 Dip Direct.	Description
1	10 14	16 20	22 24	26	28 32	34 38	
S		1270	CS12			610 21210	
S		1420	F12	S		714 21210	S symm 21-42
S		1570	CS12			810 21210	
S		1680	F12	Z		710 21210	Z region 42-68
S		1820	F12	S		715 21210	S region 68-82
S		1850	F12	D			D.D. 82-85
S		1970	PS12			618 21210	
S		11120	F12	P		518 21210	PS2 97-112
S		11230	CS12			517 21210	S region 112 — 141.0
S		11410	F12	S		615 21210	
S		11465	F12	M		712 21210	M region 141.0 - 146.5
S		11570	F12	S		515 21210	S region 146.5 - 157.0
S		11770	FS12			618 21210	
S		11970	PS12			715 21210	
S		12170	PS12			710 21210	
S		12250	F12	P		616 21210	PS2 157.0 - 225.0
S		12370	CS12			710 21210	
S		12510	F12	S		613 21210	S region 225.0 - 251.0
S		12615	PS12			515 21210	
S		12660	F12	P		714 21210	PS2 251.0 - 266.0
S		12750	F12	S		713 21210	266.0 - 275.0 S region
S		12870	PS12			810 21210	
S		12970	F12	P		710 21210	PS2 275.0 - 297.0
S		13032	F12	M			M region 297.0 - 303.2
S		13170	CS12			710 21210	
S		13370	CS12			718 21210	
S		13450	F12	S		815 21210	S region 303.2 - 345.0
S		13477	F12	M			M region 345.0 - 347.7
S		13570	CS12			813 21210	
S		13770	F12	S		810 21210	S region 347.7 - 377.0
S		13820	F12	M			M " 377.0 382.0
S		13980	F12	P		715 21210	PS2 382.0 - 398.0
S		13995	F12	Z			Z region 398 - 399.5
S		14080	F12	P		716 21210	PS2 399.5 - 408.0
S		14100	F12	S		710 21210	S region 408.0 - 430
S		14435	PS12			710 21210	

DDH 79-VX-2 (2 / 8)

Cyprus Anvil Mining Corp.
Structural Log

Logged By: IWM

Code	From	To	Feature	Sym	S_1 Dip Direct.	S_2 Dip Direct.	Description
	10 14	16 20	22 24	26	28 32	34 38	
S		14515.0	FI2	P		710 21210	PS2 430.0-455.0
S		14710.5	FI2	Z		712 21210	Z region 4550-4705
S		14810.0	FI2	M		814 21210	M " 4705-4810
S		14919.0	FI2	P		810 21210	PS2 480.0-499.0
S		15017.0	FI2	S		810 21210	S region 499.0-507.0
S		15217.0	FI2	M		815 21210	M region 507.0-527.0 (PS2
S		15517.0	CIS12			810 21210	
S		15685	FI2	S		615 21210	S region 527.0-568.0 (PS2)
S		15760	FI2	M			Breccia region 568.0-576.0
S		15870	FI2	M		710 21210	M region 576.0-587.0
S		16070	CIS12			710 21210	
S		16212.0	CIS12			715 21210	
S		16312.0	FI2	S		810 21210	S region 587.0-632.0
S		16417.0	PIS12			810 21210	
S		16611.0	FI2	P		714 21210	PS2 632.0-661.0
S		16717.0	CIS12			716 21210	
S		16910.0	FI2	S		710 21210	S region 661.0-690.0
S		16987	FI2	P			PS2 690.0-698.7
S		17095	FI2	M		810 21210	M region 698.7-709.5
S		17216.0	FI2	S		515 21210	S region 709.5-726.0
S		17430	AS12			714 21210	
S		17617.0	FI2	P		710 21210	PS2 726.0-767.0
S		17717.0	FI2	S		510 21210	S region 767.0-777.0
S		17916.0	FI2	P		710 21210	PS2 region 777.0-796.0
S		18116.0	CIS12			814 21210	S region 796.0-829.2
S		18219.2	FI2	S			PS2 region 829.2-917.0'
S		18316.0	PIS12			719 21210	(minor SBZ)
S		18516.0	PIS12			418 21210	
S		18716.0	PIS12			716 21210	
S		18916.0	PIS12			811 21210	
S		19116.0	PIS12			815 21210	
S		19117.0	FI2	P			S region 917.0-932.0'
S		19320.0	FI2	E		811 21210	Z region 932.0-935.0
S		19350	FI2	Z			PS2 region 935.0-958
S		19520.0	PIS12			812 21210	
S		19580	FI2	P			S region 958-967.0

DDH 79-VX-2 (2 8) Cyprus Anvil Mining Corp.

Structural Log

Logged By: DJH

Code	From	To	Feature	Sym	S_1 Dip	S_1 Direct.	S_2 Dip	S_2 Direct.	Description
1	10 14	16 20	22 24	26	28	32	34	38	
S		9670	F2	Σ			80	220	Z region 967.0 - 983.0
S		9830	F2	Z			81	220	PS2 region 983.0 - 990.5
S		9905	F2	P					M region 990.5 - 1005
S		10020	CS2				78	220	
S		10050	F2	M					PS2 region 1005.0 - 1052
S		10220	PS2				75	220	
S		10420	PS2				73	220	
S		10520	F2	P					Z region 1052.0 - 1057.0
S		10570	F2	Z			72	220	S region 1057.0 - 1075.0
S		10750	F2	S			74	220	PS2 w/ minor R & 1 "Z"
S		10950	PS2				85	220	1075.0 - 1102.0
S		11020	F2	P					R region 1102.0 - 1214.0
S		11160	PS2				78	220	
S		11360	PS2				75	220	
S		11560	PS2				79	220	
S		11760	PS2				65	220	
S		11960	PS2				84	220	
S		12140	F2	R			82	220	Z region 1214.0 - 1217.5
S		12175	F2	Z					R region w 2 "S" and
S		12310	PS2				78	220	post D2 folding 1217.5 -
S		12490	PS2				78	220	1267.8
S		12678	F2	R			75	220	PS2 region 1267.8 - 1299.0
S		12870	PS2				60	220	(post D2 folding)
S		12990	F2	P					RS2 region 1299.0 - 1323.
S		13070	PS2				80	220	
S		13230	F2	R					PS2 region 1323.0 - 1328.0
S		13270	PS2				75	220	(post D2 folding)
S		13280	F2	P					Post D2 bxia 1328.0 - 1341
									- no sym, no S2
S		13410	F2	P			55	220	PS2 region 1341.0 - 1364.5
S		13580	PS2				72	220	- post D2 folding
S		13645	F2	P					RS2 region 1364.5 - 1380.0
S		13770	PS2				69	220	
S		13800	F2	R					PS2 region 1380.0 - 1397.0
S		13860	PS2				74	220	
S		13970	F2	P			73	220	

CYPRUS ANVIL MINING CORPORATION

Page 1 of _____

DIAMOND DRILL CORE LOG

Date: _____

Hole Number: 80VX01

Reference Fabric Orientation Diagram:

Project: Vangorda Plateau remap

Location: _____

Claim: _____

Terr.Plane Co-ords.: _____ N

_____ E

Grid Co-ords: _____

Elevation: _____

All symmetry determinations looking

Total Depth: 817.8 metres

_____ with _____ dipping

Inclination: -90°

_____ with dip azimuth _____.

Purpose: Dump site & testing Vangorda - Mt. Myc contact

Reason hole Terminated: _____

Logged by: GAJ

Date(s) Logged: July 31/1984

Drilling Contractor: ARCTIC

	Size	CORE From	To	
	Casing	0	46.0 metres	Collar Cased and Capped: _____
Hole Cemented:	_____	_____	_____	
Steel down hole:	_____	_____	_____	

Started: _____ Completed: _____

Cyprus Anvil Mining Corp. Page 2 of _____

DDH 80VIX01 (2 8)

Diamond Drill Core Log Date: _____ Logged By: _____

Code	Drillhole	Elevation	Northing	Easting	Units (feet/metres)	R.F.E.	
1	2 8	10 16	17 24	25 32	34 39	41 42	
T	80VIX01					512	

Metres

Code	Drillhole	Depth	Zenith Angle	True Azimuth	Comments
1	2 8	10 14	22 26	28 32	34 56
R	80VIX01	0 0	180.0	90.0	AT COLLAR
R	80VIX01	153 3	.	153.0	
R	80VIX01	1414 8	.	319.0	
R	80VIX01	2316 2	1616.5	518.0	
R	80VIX01	3276	160.0	431.0	
R	80VIX01	5105	152.0	421.0	
R	80VIX01	6020	150.0	350.0	
R	80VIX01	6934	148.5	280.0	
R	80VIX01	7543	154.0	150.0	
R	80VIX01	7848	154.0	170.0	
R	80VIX01	8153	154.0	110.0	
R			.	.	
R			.	.	
R			.	.	
R			.	.	
R			.	.	
R			.	.	
R			.	.	
R					
R					
R					
R					
R					
R					

Code	Drillhole	Comments, Errant Remarks, Snivellings and / or Lewd Suggestions
1	2 8	10 56

DDH 80VX01

Cyprus Anvil Mining Corp.

Lithologic Log

Date: _____ Logged By: GAJ/FMS

Code	From	To	Recov.	No.	Unit	Description
	10 14	16 20	22 24	26 28	30 34	35
	00	460		1	#	no recovery
	460	514	810	2	5C3	"leopard rock" [5C35] mod: soft med → dk grn/wht mottled, calcareous, str. CS2 foliated meta basalt typical lep. rk texture of dk grn chl. folia alt to grey white calc. patches. Unit is mod. calc. overall. Maybe some inter layered alt. phyll. in last metre. Core is mod. broken from 46 → 52.7 m. 52.8m there is few inches of clay, poss. cave, d to EOI is mod. broken. Recovery ~ 80%
	5145	6149		3	5B6B	[5F6] soft to mod. soft. generally non calcareous, pale yellowish to greyish grn, thickly laminated to thinly bedded Chloritic phyll. S_2 surfaces are pale silvery grn sugg. fairly substantial musc. content. Only a short section, upper 2m is calcareous, near 56.7. Unit may include some meta basalt, particularly 56 m → 56.7m. Strongly developed coal or banding & planar musc. foln sugg altered phyll. Unit is CS2 to PS2 foliated. Unit basically intact until 60.8 m. f 60.8 → 62.5 mod. broken, some rubble, incipent gauge. 62.5 – 64.4 intact, 64.4 → EOI strongly broken. Thee recovery o.k except 60 → 62.5 where 0.5m missing No sig. faults in unit. Overall poorly developed lithons.
	6499	7600		4	5C3	"leopard rock" Mod soft to soft, med. calc., strongly lithoned, str. fol. meta basites similar to unit #2 Unit contains many thin qtz veins ll to S2 & may contain some zones of altered phyllite. Color is med. dark green w light grey to white streaks & patches, overall mottled text. Overall mod to strongly broken, to 69.9 m, 64.4 → EOI is mod. broken w many zones of gauged incipent gauge ↓some possible cave from uphole, also local rubble. at 75.0 m there are short sections of Biotite rich. - This unit essentially part of next unit but exaggerated marginal variance of metabasites

C.A.M.C. 1981 – E – 3A

100.9 SBO Good lithons

This is an example of moderately calcareous SBO the typical lithology of Vangorda formation - lithon development here is less than is characteristic for this unit (see 223.3)

195.7 SC/SD Field / SBO

example of planer ~~banded~~ thinly to thickly laminated green & white calcareous phyllites that typify the original SD used in field mapping - this is now Sf of subsurface usage. These rocks are developed adjacent to metabasites on the surface and here too. - This is the lithology at stop V- the (Dy F_1 Fold) and stop V- (the metabasite stop)

Down hole lithon development is better and the rock looses its planer lamination so that it looks like a green version of unit SBO - we belive thats just what it is (see 234.5 for an example of the gradation into SBO)

DDH 80VX01 (2 — 8)

Cyprus Anvil Mining Corp.
Lithologic Log

Date: _____ Logged By: GAJ / FMS

Code	From	To	Recov.	No.	Unit	Description
1	10 — 14	16 — 20	22 — 24	26 — 28	30 — 34	35
	7.6 0	9.1 4		5	5.C.6	± 3 minor
27.8						mod soft → soft, generally PS_2 foliated, generally non calc, mottled green (med to dk) metabasite. Fine to med. grained, generally homogeneous. Short sections of gtzd leopard rock texture, but overall just homog. Foliated metabasite.
						below 86.6 is diss. calcite in specks & bands. Core status: TOI to
						77.9 is intact, 77.9 → 80.3 mod. broken w zones of ind. gouge w 0.7m
						core lost, 80.3 → 91.0 mod. broken w minor ind. gouge locally ~80% recovery,
						91.0 → EOI rubble & ind. gouge. Note: no sig. faulting in unit & just looks like
						tendency of SC to turn to gouge on its own. Biotite (86.6-89.0 - 2mm each
						interval + amygdules rarely in unit. Last 2m of unit has odd text.
						looks like dilatent veins reminiscent of asbestos textures.
28.8	9.1 4	9.4 4		6	5.B.8.0	[SF3]
						mod soft, mod calc PS_2 fol. mod. lam. Yellowish green, white → med green.
						Often Phyll. similar to unit 3. Core is very broken w rubble at top &
						bottom.
44.7	9.4 4	11.4.6 8		7	5.B.3.0	
						Med soft → med hard, med grey, well lithoned to PS_2 foliated, calcareous, med grey
						Phyll., S_2 foliation surfaces are a steely med grey. Unit largely PS_2 fol.
						above 12.3m w good lithon dev. below that. Unit is thin to thick lam. in
						shades of dk med grey to white reflecting abund. of calcite/quartz bands.
						Bands 1 → 2mm to 1cm thick, v.f. w greyer, generally non calc,
						phyll. component of about same band thickness. The white calcareous lithon
						forming bands might amount to as little as 20% of unit mainly in lower
						portion. Remainder is sub equal amounts of pelitic micaceous bands
						and finely granular qtz. calcite layers w variable mica contents
						Some sections in upper ½ of section str. calc.

- Core is mod broken to intact to 113.8 m. Minor fault at 101 ∠30° C.A.M.C. 1981 - E - 3A
to core axis. Minor ind. gouge at 108.1, short rubbly sections 1m up or down hole
from there, recovery to 113.8 seemstoke ok

223.8 SC

This is a good example of fairly strongly foliated homogeneous calcareous metabasite – the lenticular chloritic lamination along S, is a small scale version of the texture known as leopard rock texture

229.3

SC high strain – v. strongly foliated & lenticularly laminated metabasite probably developed in response to a zone of high strain in the SC body

234.5 SD Field Problem near SC SF3 → SB50 → SB0 "The greening"

gradual fade out of green color away from metabasite suggesting that SF3 (original SD Fickl) is not a tuff but is an altered version of unit SB0

273.3 SB0 mod lithons

an example of SB0 with moderately (but still not great) developed lithons – normal color

note irregular porphs pseudomorphs after py

This rock can be visualized as 3 types (compositions of bands)

1) white coarser granular qtz + calcite

2) gray soft non calc phyllite

3) mixed qtz calcite mica fg layers intermed from 1 to 2 each may metam to a diff. calcsilic composition

146.8

DDH 8.0.V.X.0.1 (2 – 8)

Cyprus Anvil Mining Corp.
Lithologic Log

Page 5 of ____

Date: ____ Logged By: GAJ/FMS

Code	From	To	Recov.	No.	Unit	Description
	146					113.8 → 117.4 very broken to rubbly w̄ minor ind. gouge w̄ 1.8m recovered, minor flt.? Unit contains scattered pyrrhotite pseudomorphs after Py. 117.4 – EOI Intact to locally mod. broken, recovery ok
46.1	146.8	151.4		8	5B6$	±0 minor
						med. grey w̄ wht banded gen. noncalc phyllite similar to unit 7 ~~except~~ wht bands tend to be Dolo. rather than calc, well lithoned, mod. broken to intact, minor rubble + ind. gouge at EOI related to small fault 40° to core axis. Unit distinguished only w̄ acid, does not weather brn.
51.2	151.4	168.0		9	5B0	
						Med gry, well lithoned, CS_2 fol., calc mod soft → mod hard phyll. As above. Unit contains Po porphs, local devel. of grn mineral in lithons Actinolite?. Unit is a pale yell. grn to grn wht variably calc + gen. Dol. slightly tan weathering, mod soft → mod hard well banded chl. musc. phyllite. S_2 folia are pale silvery grn., no remnant grey, however they are planar + musc. looking. Rock text. similar to above unit w̄ it has a grad. contact w̄ above unit over 1m from which it appears to have been derived. Color of S_2 folia similar to color that using for 4L6 weak. Core is intact to loc. mod. broken. Looks like ultra carbonated 5B, related to fault near end of last unit?
52.8	168.0	173.4		10	5B4$	8±0

unit 10 description

description

unit 9 description

core intact to 157.3m
157.3 – 158.3 mod broken to rubble + recovery in both ok
158.3 – 162.3 intact + ok minor fault 40/0 90
162.3 – 163.1 str. broken rel. to calcite veining
163.1 – 164.8 intact
164.8 – 167.3 rubble + very broken core recovery seems to be ok + no major faults
To EOI is intact

343.9 SBO2 minor + calc sil

2 things to note here -

1) slightly dark color of pelite bands is boarder line into SB20

2) green mineralogy developed in coarser calc qtz bands and biotite hear them (& in mixed bands) is the first step in the transition into calc silicates (see 448.6 m for next step)

compare to 273.3 & 100.9 for lower grade equivalents)

448.6 SBO bio calc sil

well developed green & brown after actinolite & biotite in calcareous bands but no bio yet in pelite bands

compare to 343.9 273.3 & 100.9

461.8

a not bad example of SDO, the yellow green (olive drab) color is characteristic - this lithology is usually seen in small bodies - it is fine grained normally calcareous and always has veins of coarse qtz + calcite along S_2 or S_1 that have a characteristic pinch & swell irregular texture.

often the margins of metabasites have this texture - see for example the SC body from 175.7 - 195.6 where the distinction between SC and SD will be clearer.

DDH S.e.V.X.0.1 (2–8)

Cyprus Anvil Mining Corp.
Lithologic Log

Page 6 of _____

Date: _____ Logged By: GAJ/EMS

Code	From	To	Recov.	No.	Unit	Description
1	10 14	16 20	22 24	26 28	30 34	35
	1,173 4	1,175 7		11	5 B B 0	Mod. lithified, pale yellowish grn to wht thickly lam. calc. chl. musc. phyll.
53.5						Texturally sim. to last unit but stronger grn color & is calc. rather than Dolo. Unit is intact
	1,175 7	1,195 6		12	5 C 3	(5DO) 97:3
59.6						Homog. med → dk grn calc., mod to str. fol., finely to med gr. speckled in whites & greens metabasite. PS2 → CS2 foliated, 2m of f.g. fol. marginal phase at top + 0.5m at bttm. Upper marginal phase may include minor alt. phyllite. Marginal rocks look like 5DO + probably are.
						Rock does not have well developed leopard text. but is more speckled overall but loc. can be seen grading into "leopard" texture rock. Unit is intact & recovery is wonderful.
59.8	1,195 6	1,196 1		13	5 F 3	[5B80]
						Mod hard, well banded, calc., thick to thin lam., in shades of wht & med grn. Chlorite musc. phyllite. Folia are med to dk grn. This is "classic "5D Field" now called 5F & is altered Vangurda. Unit is intact
60.1	1,196 1	1,197 4		14	5 D 0	
						Mod soft calc. str. PS2 fol. med grn Chl. phyllite locally w/ fine lithon str. developed in white Calc. bands. Overall fairly homog. may include alt. 5B0 phyll. Intact rec. ok
61.1	1,197 4	2,010 4		15	5 B B 0	
						Unit dominantly med. grn to grn wht, str. banded, thickly laminated calc Chl. phyllite identical to unit 12. Lower ½ of unit includes minor inter banded metabasite, core is intact & recovery is ok
61.4	2,010 4	2,011 6		16	5 C 3	
						Med to dk grn, PS2 fol, generally homog Calc Chl Phyll / metabasic leopard rock textures in center of unit. Resembles marginal phases of unit 12
						intact, minor incipient gouge in middle of interval

C.A.M.C. 1981 – E – 3A

530.2 non calc unit 5B = 5BG ± $ minor This is slightly dolomitic (thus the tan weathering color) non calc version of vangorda fm phyllites - This lithology is commonly developed near Faults - dolo does not readily fizz with 10% acid (esp on a cold day) thus this lith has been logged on some properties as 5BG - if dev. near a fault correlation of non calc phy in EO_v will obviously be a problem.

569.1 another version of the transition from 5BO to 3D note that lithons are becoming less common and PS_2 more common (lithons unfortunately never were good in this hole!) as we get deeper.

DDH 80VX01 (2 — 8)

Cyprus Anvil Mining Corp.
Lithologic Log

Date: _____ Logged By: GAJ / Davis

Code	From	To	Recov.	No.	Unit	Description
1	10 14	16 20	22 24	26 28	30 34	35
	210 11 6	210 30		17	5 B 8 0	
61.9						med grn/wht well banded, well lithoned, calc chl. Phyll similar to unit 15, intact. Includes sections difficult to tell from 5C, lower contact is intactmct
62.7	210 30	210 57		18	5 C 3	± $ (10 Q#$) 80:20
						Very similar to Zuni tsup hole but contains interbanded qtz veins. May contain some altered phyll. Core is mod. broken to intact w minor incp. gouge
64.0	210 57	210 99		19	5 B 8 0	(5DO)
						Banded Calc. Chl phyll as per prev. units & has interlayered w two 0.4 m layers of 5D metabasites. Core is intact to mod. broken & recovery is good.
64.3	210 99	211 09		20	5 C 3	
						As above. Intact w minor incp. gouge at EOI.
64.6	211 09	211 21		21	5 B 8 0	[5F3]
						Thin → thick lam med grn/wht calc. Chl phyll., good planar banding. Typical 5D field. Identical to unit 13
71.8	211 21	231 58		22	5 C 3	± 6 minor
						Homog. fine → med grained, prom. wht rem. feldsp.?, speckled metabasite, invariably calc., mod foln, locally w good S_2 crenulations. 230.5 m 0.4 m of leopard rock textured metabasite, appears to be a highly strained zone w in otherwise homog. metabasite.
						Intact core. Very similar to unit 12. Minor chilled zones at top & bottom?
75.1	234 58	244 64		23	5 B 8 0	(5DO) minor
						Thinly to thickly lam. Grn Calc Chl Phyll + grades down hole into poorly lithoned grnish to grn ish grey Calc musc. Phyll w faint grey tinge on S_2 foln

605.8 – very poor example of SE marbles – not normal for SBO/SA interface

DDH 80VX01 (2–8)

Cyprus Anvil Mining Corp.
Lithologic Log

Date: Logged By: GAJ/FMS

Code	From	To	Recov.	No.	Unit	Description
						Eventually grades into 5BO grey Phyll. 5DO is in 0.25 + 0.1 m interbands in top 1m. Unit is mod soft. Contains Po after Py in last 2m
86.7	2464	2845		24	5BO	
						Med grey mod soft to mod hard, well lithomed, Calc, locally strongly calc. phyll., Typical 5BO. Po porphs, unit is intact minor crackle veinlets filled w̄ calcite / Tension gashes in last 4.5 m
89.0		2920		25	5BO	± Bio BXA
						Extensively crackle brecc. + patchily biotite bearing gry Calc. Phyll., Unit is same as above but more intense veinlet + for biotite overprint. Crackle veinlets/Tension gashes are more abundant & finely spaced down section. Last ½ m is sheared basically along S2 w̄ steeper X-cutting fractures + last metre of unit has no Biotite, recovery is perf.
89.6	2920	2940		26	5B6	$ ± 2 very minor
						mod broken to rubbly, fault at 40° to C.A. near middle of int. lower contact is gradational
90.9	2940	2982		27	5BO	± $
						Med grey, mod lith., Calc. phyll., slightly dolomitic in upper 1m Core is intact
91.0	2982	2988		28	5BBO	
						Grn + wht banded Calc Chl phyll, may include some 5C, highly foliated "leopard rock" at top. Core intact.
91.2	2988	2992		29	5C$	±3
						Typ. leopard rock texture, intact

611,2 SA169

hard slightly pyritic carbonaceous siliceous phyllite
Transitional from 4A to 5A - what is origin of the 5= bands

DDH 80 VX01 (2–8)

Cyprus Anvil Mining Corp.
Lithologic Log

Date: ____ Logged By: ____

Code (1)	From (10–14)	To (16–20)	Recov. (22–24)	No. (26–28)	Unit (30–34)	Description (35)
91.5	2992	3004		30	5B80	
						Med gry grn banded Chl. musc. phyll. Intact
92.6	3004	3040		31	5B0	±B minor
						Med gry, mod soft, calc. phyll, minor lithon develop., slight grnish
						twge twards top
92.8	3040	3044		32	5B80	
						Banded lt to med grn/wht Calc Chl. musc. phyll., mod broken
93.5	3044	3067		33	5D0	(5C$) 60:40
						f.g. strongly PS_2 fol. Calc, med yellwish grn Chl. phyll., Interbanded
						w̄ leopard rock textured 5C, + the 5C is Dolomitic w̄ med-dk
						grn anastamozing
93.7	3067	3076		34	5B80	
						lt. to med grn / yllwish grn banded Calc. chl. musc. phyll., ~~Intact~~
						mod broken.
93.8	3076	3080		35	5C3	[5D0]
						lt yllwish grn → olive grn calc. chl. musc. phyll. Unit sim. to
						last unit but contains colr diff + has a center of finely leop. rock
						textured possibly meta basite. Mod. broken
95.3	3080	3127		36	5B0	± Bio ± Calc. silicaty
						med grnish grey, mod hard → mod soft, mod calc., poorly lithoned
						phyllite. Contains biotite in patchy areas related to S_2 fractures X-cutting
						S_2. S_2 folia are med. silvery gry. Mod broken to intact
98.5	3127	3233		37	5C3	± $
						Med-dk grn, mottled to foliated, leopard rock textured, calc, dolomite
						meta basites, Unit is texturally very heterogeneous largely due to abundance
						of qtz carbonated veins.

612.9 SC4$ → SD4$

ultracarbonated & sheared metabasite - note tan weath color and wet-fresh color of light flesh indicating dolo. (presumably ferroan)

note also fuchsite? mar. Posite? at TOI

DDH 80VX01 (2–8)

Cyprus Anvil Mining Corp.
Lithologic Log

Date: ____ Logged By: ____

Code (1)	From (10–14)	To (16–20)	Recov. (22–24)	No. (26–28)	Unit (30–34)	Description (35)
						TO1 to 317.3m is intact, 317.3 to EOI is str. broken w/ several
						zones of incipient gouge, prob not major faults. TO1 appears to be a
						fault ∥ to S_2. Recover OK
	323 3	323 9		38	5B8 6	
98.7						Non Calc. thinly banded, lt to med gry grn, Chl musc phyll. Non calc
						version of 5D Field = 5F6
98.9	323 9	324 5		39	5C3	
						Pseudo leopard rock textured, may be altered phyll. S_2 folia
						med → dk grn., Ambiguous texture but resembles portions of unit 37
99.1	324 5	325 2		40	5B8 6	
						Identical to unit 38
99.2	325 2	325 7		41	5C$	
						Texturally identical to unit 39 except it is dolomitic. Somewhat better
						Leop. texture of anastamozing Chl. folia. Overall color of this
						& last 5C has been gry grn rather than grn.
99.5	325 7	326 4		42	5B8 6	±0 minor
						Identical to unit 40 but contains calcite in minor bands
100.4	326 4	329 5		43	5C$	±3 minor
						Gry grn str. foliated, locally lithoned, dolo. invariably calc. Chl rich
						phyll. Soft to mod. hard. It has bands, strks + patches of lt. gry
						carbonate + qtz? 1→20mm thick separated by dk grn chloritic folia.
						Minor lithon texture locally approaches leopard rock texture.
						very similar to unit 41 etc.
100.7	329 5	330 5		44	5B6 8	[5F6] (5C3)
						5B8 has med olive grn muscovitic looking folia v. similar to above
						units. 5C3 is from 329.6 → 329.9

624.9 SA16

hard dk gray carb silic phy - similar to above but less ~~silicar~~ s= and only v. minor qtz s= banding

DDH 80VX01 (2–8)

Cyprus Anvil Mining Corp.
Lithologic Log

Date: ____ Logged By: GAJ - FMS

Code	From	To	Recov.	No.	Unit	Description
1	10–14	16–20	22–24	26–28	30–34	35
101.1	3305	3318		45	5C3	
						As above, almost leop. rk texture. Could easily be confused w alt. Calc
						phyllite. unit is intact. Similar to last 5C units
105.1	3318	3448		46	5B8O	± Bio minor ± 2 minor
						Med yllwish grn Calc, well bnded, Chl musc phyll, pale Ag to
						med Ag grn S2 folia, last 1.5 m contains patchily developed biotite &
						green mineral actinolite? in lithons. Bio assoc. w but not directly
						w/in lithon bands. Gradational lower contact. Core is intact
105.7	3448	3470		47	5BO	Calc silicaty Bio
						Med grey calc. phyll., mod soft → mod hard. varies from PS2 fol at
						bottom to mod well lithoned at top. Lithons consist of grn actinolite &
						calcite qtz & lithons tend to be surrounded by biotite. Prescence of bio.
						gives a patchy purplish brn cast to otherwise med grey unit. S2 folia
						are med - dk steely grey. The unit is wonderfully intact. Unit a shade dk or grey than normal
108.4	3470	3557		48	5C3	
						mod to str. foliated, med grn, calc. Chl phyll., has good mottled texture
						transitional into fine leop. rk texture. (ie 1mm x 1cm lenses separated
						by chl. folia). foliation varies from PS2 to CS2. Unit is intact & similar
						to unit 22 + unit 12. & unit intact
108.6	3557	3563		49	5BB6	± O minor
						Med → dk grn, lt grn, thinly lam., variably, slightly calc. phyll. & intact
113.4	3563	3721		50	5C3	
						Strongly fol., med grn, finely speckled, invar. calc. chl. phyll. Has
						fine wht speckles after plag.? & fine dk grn speckles after pxyne?
						visible on cut surface dark specks refer to dark patches on S2, reasonable
						igneous texture despite strong fol'n. Locally resemble "5 Dog"

Similar to unit 48. May include band of calc. alt. phyll.
358.4 → 358.7. Unit is intact

661.3 Bleaching of SA near metabasite - note gradational color loss

~~not~~

compare bleaching of 4A & 4C problems

DDH B0VX01 (2–8)

Cyprus Anvil Mining Corp.
Lithologic Log

Date: Logged By: GAJ-FMS

Code	From	To	Recov.	No.	Unit	Description
1	10–14	16–20	22–24	26–28	30–34	35
113.8	372 1	373 6		51	5B80	[5F3]
						Med to lt yllwish grn / med grn thinly lam. calc. Chl. phyll. Unit is
						intact + sim. to several last phyllites near metabasites except here there
						is quite str. diss. green mineral in calcareous bands, actinolite?
128.5	373 6	421 7		51	5B0	± Bio minor ± Calc silicaty minor
						Med gry, PS2 to CS2 foliated, mod hard to mod soft calc. phyll.
						S2 surfaces steely med to dk gry. First 2m contains str. biotite
						coloration patchily dist., below that only occaissonally present. Mod.
						strong develop. of green mineral in lithons (actinonlite?) near top
						however much of unit is normal 5B w̄ minimal grn. min. in lithons
						Interval from 402.4 to 404.4 was orig. logged as 5D3 w̄
						was xed out + changed to 5B73 however essentially same as
						rest of unit to my eye. Might be a little less grn on fol'n surface.
				3		but w̄ in normal range for 5B0. intact int, except for minor rubble near
133.7	421 7	438 9		52	5B0	Bio ± Calc silicaty
						Med grey Calc. phyll. w̄ gen. PS2 foliated w̄ minor lithons
						preserved. Cut surface of core has brn cast due to biotite development
						Biotite developed peripheral to granular calcite qtz bands as well
						as w̄ in them. Green min. also developed in those bands. Int.
						from 431 → 432.5 is lt yllwish grn Chl. musc. calc. phyll
						generally lacking biotite + was orig. logged as 5D3 + 5C however
						appears to be a short leached int. assoc. w̄ veins? Texturally
						rem. of leop. rk. loc. but musc. appearance to folia argues
						against 5CD. Could be 2 v. thin 5C's centred on 431.3
						w̄ adjacent bleaching. Biotite wkly dev. in last 2m. Unit is
						intact.

410.5 - 413.5 Minor rubble + indet. gouge at 415.5 - minor rubble from 383 to 384m - 397.7 to 399 assoc w̄ small fault at 30° to C.A. w̄ steeply raking slide otherwise unit intact

673.7 a problem borderline rock between SB62 and SA6 or
3G9 and 3E0

my tendency is to go to the lighter unit and say the darkness of the overlying carb. unit (~650m) is the limit for SA - see also SA0 type box - this rock is considerably softer than the previous thus no 1 modifier is used

DDH 80VX01 (2 — 8)

Cyprus Anvil Mining Corp.
Lithologic Log

Page 13 of _____

Date: _____ Logged By: GAJ - FMS

Code	From	To	Recov.	No.	Unit	Description
	10 — 14	16 — 20	22 — 24	26 — 28	30 — 34	35
134.1	4,318 9	4,410 1		513		5C3 transitional into 5D3 (5B80)
				5		Med brnish grn to yllwish grn Calc. chl. phyll. Moderate S_2
134.3	4,410 1	4,410 8		514	?	foln & strong S_1. S_2 fol'n are brnish grn + chl. spotted appears to be biotite. Last 0.3m is calt. banded phyll. To 440.8
						Core resembles coarse pocted rectangular rabbit pellets. Core is micro blocky olive grn to yllwish grn. Appears to be rich in clay & has less. throughout small calcite xtals/clusts & seems to have rele. intact calcite veins & tastes slitty but definitely clayey & not gritty to the teeth. Core disintegrates to clayey mass w slight pressure. Appears to have been intact rock rather than gouge. Appears derived from post D2 micro porphyritic dyke. Upper & lower contacts sharp at ~50° to C.A. & recovery is good for something so fragile.
				6		* check original log to see if this was to be rock * yes it was 10E
140.2	4,410 8	4,610 1		515	5B10	Calc silicaty Bio
						Cal. silicaty Bio, moderately hard med brnish gry Calc. phyll. is generally PSz fol. w local litho preservation. Has grn actinolite? or (chl) in granular qtz lithons. Bio is adj. to lithons & assoc. w fine mixed mica calcite qtz bands. Bio not well developed in pelitic bands. Unit consists of 15% coarser granular quartz calcite bands w Bio. and subequal amts of grey pelitic and pinkish or purplish brn mixed mica calcite qtz. Banding is on a mm scale w a few cm of coarser calc. qtz. alt. w gry or brnish gry bands about ½ as thick
						internally laminated on a mm scale
						This unit was intact.

C.A.M.C. 1981 - E - 3A

711.7 This is logged as 3G9 rather than 3E0 (see 673.7)

746.5 This box and the one above & below it illustrate typical 3G0 & the range in its composition - in this box are several ~10 cm greenish gray qtzose bands that are probably after qtz sstn. beds - usually they are thinner as in the adjoining boxes -

DDH 80VX01 (2 — 8)

Cyprus Anvil Mining Corp.
Lithologic Log

Date: _____ Logged By: GAJ-FMS

Code	From	To	Recov.	No.	Unit	Description
	10 — 14	16 — 20	22 — 24	26 — 28	30 — 34	35
140.6	4160	4161 5		516	51BIBIO	Bio Calc silicate
				7		Essentially same as last unit texturally however grey bands are lt yllwish grn chlorite muscovite. This unit is intact
141.0	4161 5	4162 7			51DIO	
						Yellowish med grn, PS_2 foliated, calc. chl musc. phyll.
						Typical irregular qtz calc veins. Unit mod. broken to incip. gouged & no faults
141.7	4162 7	4161 5 1		517	51BIBIO	→ 5BO ± 8 BIO
				8		med grnish grey calc musc chl phyll generally PS_2 fol. Has loc. bio rel. to granular qtz calc. bands. Foliation surfaces are grnish gry.
						Locally pelite bands bleached totally to yllwish green especially at top.
141.9	4165 1	4161 5 8		518		
				9		Sand & rubble, core?
143.5	4165 8	4170 9		519	51CB3	BIO
				60		Med brnish grey to grnish gry, strongly PS_2 fol. Calc. Chl. Bio. phyllite w intervals of very broken med grey Biotite bearing calc phyll.. Foliation surfaces in former are grnish brn to brnish gry grn & in latter grnish grey to grey. Interval contains rks whose textures resemble 5C foliated & 5b as well as 5B, cannot differentiate. Unit mod. broken, rubbly 567 – 568.5 m. Is this alteration related to fault zone? Superimposed on already difficult metabasite pelite package
160.8	4170 9	5121 6		610	51BIO	Calc. silicaty Bio → 5BO calc silicaty
				1		Med gry Bio bearing Calc phyll. Brnish cast to cut surface same as previous intervals. Unit rich in Bio in upper portion

765.2 thin SDH bands in dark phyllite – (logged as 3691 bandsline)
are these tuffs or.....

DDH 80VX01 (2–8)

Cyprus Anvil Mining Corp.
Lithologic Log

Date: July 30/84 Logged By: GAJ-FMS

Code	From	To	Recov.	No.	Unit	Description
1	10–14	16–20	22–24	26–28	30–34	35
						lithons/bands contain grn mineral (actin.?) which persist throughout entire interval. Unit poorly lithoned over all w/ section of excellent lithons alt. w/ PS_2. Core is intact to 514.2 + mod. broken, to rubble to 514.5 + intact to EOI. From top of int. to 478m unit is extensively cut by post D_2 calcite filled crackle veinlets / tension gash veinlets generall oriented // to core axis. Several fractures at 474.5 m oriented at ~25° to c.a. contain tanned weathering (Dolomite) - and rocks weather rusty in vicinity. Core is intact mostly. Fracture at 521.3 at 20/325
163.1	527 6	535 2		6 1	5B6	± $ minor
				2		Med gry, tan weath., generally PS_2 fol., non calc. phyll., mod soft → mod hard. On cut surf. core is patchy flesh colored apparently after dolomite. This cdr appears to be best developed around veinlets which appear to be carrying tan weathering calcite / Dolo.. S_2 folia are lt → med steely gry. Unit mod to very broken w/ several sections of rubble & ind. gouge + short sections of coherent fault breccia best of which is at 530.9 → 531.3. Consists of tan weath. dolo. clasts in a gry scaly rk. flour matrix. Contacts & internal fol. ~ 45° to c.a. Small frac. at end of int. also ~45° (30-50°) to c.a.. Related tension gashes may imply that this is a normal fault. Minor 5D4 * band ~ 530.8m, 10cm long
164.4	535 2	539 5		6 2	5B6	± 0 minor + 2 v. minor
				3		Med gry → non calc → slightly calc. in bands phyll., mod soft to mod hard, Has normal looking steely med → dk gry looking folia + does not weath. tan as above unit did. Unit strongly calc. veined in tension gashes / crackle veinlets. 1½ m ~~from~~ + also ½ m from top O.I. are small frac. ~20° to c.a., both marked by minor fault breccia

786.0 Fair example of bluish green (after incipient hornblende?) strongly foliated metabasites the unit 3 (and higher grade usually) equivalent of 5C

DDH 8.0.V.X.0.1 (2 – 8)

Cyprus Anvil Mining Corp.
Lithologic Log

Date: ____ Logged By: GAJ – FMS

Code	From	To	Recov.	No.	Unit	Description
1	10 – 14	16 – 20	22 – 24	26 – 28	30 – 34	35
						At 538.5 is a minor fault marked by 2" of coherent flt. brecc. orient.
						30/080. Unit is tot. intact. all faults prob. subsidiary to above struct.
166.7	539.5	547.0		63	5B10	± calc silicaty ± Bio very ± 2 v. minor
				4		Med gry, PS2 foliated, mod. soft to mod hard. Calc phyll. Very thinly to
						thickly lam. in shades of med gry to lt. gry. reflecting variations in calcite+qtz,
						pelite in mixed bands. Developes minor Bio by ~ 574 m & contains
						minor grn mineral (actin ?) in coarser granular calcite quartz
						bands. There are minor Po porphs. At 540.8 is a zone of intact fault breccia
						similar to those in above unit at ~ 20-45° to c.a.. appears to have
						sub horiz. slicks at least on some surfaces. Unit is less intensely calcite crackle
						veined than above however local more str. veined zones occ. related to flts
						at 30/270 to 30/180 sub horz. slicks, all these are minor struct. pesumably
						related to above fault. Unit is intact, recovery is perf.. Is lack of
						biotite related to flt zone? This happens around some small fractures on a smaller scale
						∴ seems reasonable that it should happen on a larger scale (C.F. frac. flooding
						in calc silicates). Unit dker 'gry than normal'
184.4	547.0	605.3		64	5B10	calc silicaty, Bio
				5		Consists of med gry variably calc. generally PS2 foliated, thin to thickly
						laminated (∥ S2), mod soft to mod hard biotite bearing Phyll. Unit
						has patchy brn + grn coloration on surf. due to development of bio + actin?
						in ~~an~~ assoc. w coarser granular qtz calcite bearing bands. Bio./actin
						also appears developed in finer qtz plus mica bands. Bio. not yet developed
						in grey pelitic bands. S2 surfaces are largely still a steely dk med grey however
						many are starting to develope brn &/or grn tinge due to bio. or act molite the
						latter mineral appears as med. grn felty rosettes on fol'n. In some
						bands the grn mineral appears to be taking on a bluish grn tint

DDH 80-VX-01

Cyprus Anvil Mining Corp.
Lithologic Log

Date: _____ Logged By: GAJ - JMS

Code	From	To	Recov.	No.	Unit	Description
						Bio is not well developed below 596 m however grn calc silicates still well developed. This unit not as calcareous as SB up hole w/ may reflect diff. metamorph mineralogy or diff. composition. Has minor Po porphs. Unit appears to consist of ~20% coarser granular "siltstone" bands & subequal pelite in mixed bands. Overall unit would be classified as very thinly banded to thickly laminated w/ siltstone bands being thinly laminated internally giving overall lam. appearance to unit. Unit is intact. Starting to get abundance of silicate bands over by carbonate bands but is still minor. ∃ slight development of calcite filled veinlets/tension gashes ~20° to c.a., quite a few cut ~20/180, but also see 20/000, 20/90, + 20/270. Lower contact is sharp & marked by minor fault breccia.
	185.5					
	161015 3	161089		1615	15E12	(5B20) 80:20
				6		Med soft to med hard drk grey, generally PS2 foliated, weakly laminated, finely xtalline calcite marble to silicated marble interlayered w/ minor dk grey homog. PS2 foliated variably calc.-phyll. Minor Bio developed in unit & unit appears to be bounded by a flt at upper contact. Internally, heavy calc.-cracicle veined & may be a flt at lower contact since S2 very distorted in underlying unit & there is quite a bit of slicken sided fracture development in this unit at diverse orientations. Core is mud. broken to intact & recovery is ok.
	186.6					
	160899	161223		1616	15A1169	
				7		Hard to v. hard dk grey to blk, PS2 foliated, thinly lam. to thickly lam non calcareous carbonaceous siliceous phyll. Unit contains well developed lmm to lam wht coarse qtz Py banding similar to 4A. Minor chert (blk) nodules. Unit exhibits "Wood FLash". Unit contains perhaps 1→2% sulphides, dom. Py & v. little sphal in xcutting qtz > calcite veins

∃ ⇒ there exists

C.A.M.C. 1981 - E - 3A

DDH 80VX01 (2–8)

Cyprus Anvil Mining Corp.
Lithologic Log

Date: Logged By: GAJ-FMS

Code	From	To	Recov.	No.	Unit	Description
1	10–14	16–20	22–24	26–28	30–34	35
						Unit intact to 611.4. 611.4 → EOI is rubble & ind. gouge possibly related to 45° dipping faults. S_2 contorted in upper ½ metre + in middle of unit perhaps related to faulting. Last 20 cm is intact post D_2 fault breccia. Appears to be a shallowly dipping fault. (Sulphides above average for 5A1 ∴ 5A19 minor not used)
187.1	6123	6139		67	5C4$	
				?		Tan weathering, lt pinkish brn fresh, qtz dolo, musc ± minor qtzite + fuchite carbonated metabasite, PS_2 foliated contains minor chl streaks // to fl'n + typical 5C4$. Lower contact brecciated, flt ~ 70° to c.a. Unit mod. broken & sig. faults are external to unit
187.3	6139	6146		68	5A16	→ 5A164
				9		Upper ½ unit flt. breccia + crackle breccia related to flts at 60–70° to c.a. Lower ½ unit lt. tan to off wht musc qtz phyll similar to bleached 5A seen elsewhere & in gradation contact w̄ good 5A. Fault breccia at lower contact also w̄ very diverse orientations. Unit intact except minor gouge in center of unit related to fault described.
194.1	6146	6371		69	5A16	9 minor
				70		Hard to mod hard, dk gry to blk, PS_2 foliated, homog non calc. Carbonaceous siliceous phyll. Unit exhibits strong "dolo flash". Less sulphide rich than above unit. Py sub equal to Po in quantity & largely are in x cutting fractures or as fine diss. along S_2 rather than in qtz sulphide bands. The last 6m of unit is more compositionally banded & while generally hard it contains thin blk soft bands + very minor dark calc. bands. Qtz sulphide banding to beading is weakly developed w̄'n interval in contrast to bulk of unit. Upper 4½ m has fairly str. lt. gry → dk gry PS_2 // striping, however bulk of unit uniform dull gry.

DDH 8.0.V.X.0.1 (2 — 8)

Cyprus Anvil Mining Corp.
Lithologic Log

Date: _____ Logged By: GAJ - FMS

Code	From	To	Recov.	No.	Unit	Description
1	10 — 14	16 — 20	22 — 24	26 — 28	30 — 34	35
						Top to 6183.5 is mod broken, loc. rubbly & cut by many qtz calcite filled crackle veinlets/tension gashes at ∿ 25/180. Minor gouge & rubble zones w similar orientation. 6183.5 – 6336.1 unit basically intact. Recovery seems to be perfect. At 6336.1 there is sand & rubble, may be a bit of core. Pulled the rods? 50% of material fell from 940.4m this rect. rubbit pellet. rest of unit to EOI is intact.
197.4	16317 1	16417 8		170	15E10	B10 (SB62 ± 0) 80:20 very thinly
				1		Finely xtalline, blue gry calc. marble, interbanded w brnish gry b10 phyll w extensive boudinage of phyll layers interlayered on a medium banded scale w dk gry homog. PS₂ foliated soft, generally non calcareous phyllite. Unit is 80% boudinage marble + b10 phyll + 20% dk phyllo. The marble / b10 phyll portions are ∿ 35% marble + 65% b10 phyll. Not quite like anything I have seen in Vangorda fm & in contrast resembles closely 3F0 deep in Mt Mye fm. Except finer grained, finer xtalline & less carbonate rich than that unit usually is. It differs from unit 65 in that there is more blue grey marble in this (unit 70) unit & biotite is much higher in this unit (unit 70). Overall appears to be more calcareous as well. Unit is intact & cut by calcite filled tension gashes/crackle veinlets as usual
206.9	16417 8	16459 2		171	5141161	9 minor
				2		Dk gry to blk, med hard to hard, PS₂ fol., non calc, carbonaceous, siliceous phyll. S₂ surfaces dk gry to blk & do not regularly dirty fingers, some are polished shiny blk, it's very similar in C content & color to unit 69. This unit contains minor qtz sulphide banding w Po>Py & about ½ is in 1mm to 1cm qtz sulphide bands & other ½ in fractures or diss. always S₂. Py preferentially w in fractures. Unit has mod strong

"Dolo flash"

DDH 80VX01 (2 — 8)

Cyprus Anvil Mining Corp.
Lithologic Log

Date: _____ Logged By: GAJ - FMS

Code	From	To	Recov.	No.	Unit	Description
1	10 14	16 20	22 24	26 28	30 34	35
						Overall unit more compositionally heterogeneous than unit 69 but resembles last 3-4 m of that unit rather closely. Unit intact w/ perf. recovery. Cut by usual tension veins & a couple of insig. fractures (carb. filled) at 15° to C.A. Could be infold of unit 69 but no evidence of it. Lower contact gradational & in C content over last 0.3 m
201.4	16514 2	16611 1		72	5IA1I1614	Bio (5DO Bio)
				3		lt. grey qtz musc bio phyll, non calcareous, cut surface when wet has a slight greenish cast & slight pink cast due to bio. Foliation surfaces are pale silvery grey to off wht. Contains minor disseminated Po along S_2 & its mod. hard. 660.6 – 660.8 m is interlayer of brnish to grnish grn hpmag. calc. bio. chl phyllite which is similar to next unit. This is altered/bleached phyll & is identical to wht phyll seen in 79VX01 & 81VX01 at no same level. Unit intact w/ perf. recovery.
201.6	16611 1	16616 7		73	151D10	Bio
				4		Mmag. calc chl bio phyll. Unit is brn tinged bluish grn. The color is not normal 5D color but is more distinctly blue tinged rather than yellowish green of 5DO. Unit is intact.
202.1	16616 7	16616 3 2		74	5IA1G614	Bio
				1		Very similar to unit 72 except has greyer (grnish) color locally & last 0.4 m is very biorich. Mod broken to intact.
202.3	16616 3 2	16616 4 0		75	151D10	Bio minor (5A614 Bio) 80:20
				6		Bluish to grn grn calc. chl > bio phyll similar to unit 73. Last 0.2 m of interval are grnish gry, mod hard, altered phyll as previous unit
203.1	16614 0	16616 5		76	151D16	[3BO]
				1		f.g. hmag, mdkgrn, non calc, PS_2 foliated, mod soft, chl phyll.

DDH 86-VX-01 (2 / 8)

Cyprus Anvil Mining Corp.
Lithologic Log

Date: _____ Logged By: GAJ - JMS

Code	From	To	Recov.	No.	Unit	Description
1	10 14	16 20	22 24	26 28	30 34	35
						Mod broken to rubbly from EOI 665.0, 665.0 → 666.2 intact & to EOI incipient gouge. S_2 foln are med grn to dk grn at EOI appear to be Serpentine
203.8	161616 5	161618 7		717	151C15	minor
				6		PS_2 foliated, soft, dk grn & off wht banded to mottled slightly calc to non calc. Chl phyll. S_2 surfaces are dk grn, med grn mottled & look to be Serpentine bearing. Unit mod. broken & ends in 2.0 ind. gouge & rubble.
206.0	161618 7	161716 0		718	151A16	9 v. minor → 5 B10 2
				9		Dk gry, mod hard – mod soft, PS_2 foliated overall homog., non calc., mod carb phyll. Unit is overall v. thinly banded to thickly lam. in shades of med gry to dk gry. V. minor (1 mm–5 mm) Qtz Po bands // S_2. Unit has well developed post D_2 crenulation cleav. in locally good examples of cleavage refraction across lter grey, harder more quartzose bands. Unit contrasts w above Carb. phyll in that it is softer due to banding of soft grey phyll w harder med grey more qtzose phyll. Very minor B10 develop. in some lighter more qtzose bands. The 1st 0.4 m of unit rubbly to v. broken, S_2 steeper than normal there, possible minor fault between this unit & overlying unit. Otherwise unit is intact. Foliation surfaces are dk med steely gry to dk gry and lower contact is 0.2 m gradual loss of gry color
206.3	16 7160	16 7169		719	151B1614	B10 ± 8 minor
				80		PS_2 foliated, lt grnish to brnish grey, non calc. phyll. S_2 surfaces are lt. silvery gry to purp. brn. Unit mod hard to soft. Thinly banded to thickly lam. in shades of lt. grey & purp. brn. Lt bands are soft & v. micaceous musc. rich phyll., darker bands are harder qtz biotite bearing Unit resembles altered phyll. described above & derived from prev. unit by bleaching by metasomatic fluids under lying unit. Unit is intact.

DDH 8.0.V.X.0.1 (2–8)

Cyprus Anvil Mining Corp.
Lithologic Log

Date: ____ Logged By: GAJ - JMS

Code	From (10–14)	To (16–20)	Recov. (22–24)	No. (26–28)	Unit (30–34)	Description (35)
	6769	6826		80	5C3	± 6
208.0				1		f.g. PS2 foliated, med grn, invar. calc., finely speckled chl. phyll. Local intervals w̄ "Leop. rock" texture. Dk grn chl. folia separating lighter colored micro lithons. Unit overall quite homog. Speckled texture on mm scale involving wht carbonate? dk grn possible pyroxenes in a med grn ground mass. Upper 2m of unit mod. calc., remainder only patchily calcareous. S2 folia are dk grn to mottled w̄ med. grn. Unit intact. Minor interlayered phyllite at 678m.
210.2	6826	6898		81	5B64	8Bio (5DD ± Bio) 70:30 [3B3±Bio minor]
				2		Med interbanded a) mod hard to mod soft med to lt grnish gry to brn thinly banded non calcareous qtz, musc., biotite, chl. phyll., non calc PS2 foliated b) Homog med to dk grn calc chl phyll. Unit is intact, minor leop. rock texture assoc. w̄ 5D's. 5D transitional to v. finely speckled 5C. Altered phylls contain minor lt colr ovoid patches (2-3mm long) they are elongate to S2, possible reduction spots?
210.6	6898	6913		82	5B62	± 0 (5C3)
				3		moderately soft, PS2 foliated, dk gry to med grnish gry, locally calc. Thinly interbanded w̄ med to dk grn mottled calc. leop. rk textured calc. Chl. phyll. Moderately broken, small fault at 690.4 ~30° to c.a. & there is minor bio developed locally in short sections of altered phyll assoc. w̄ 5C's
211.0	6913	6925		83	5C3	
				4		Grungy, incip. gouge, rubbly, calc., chl phyll. Dk grn, slight leop. rk. texture. Recovery ok

DDH 80.Y.X.01 (2–8)

Cyprus Anvil Mining Corp.
Lithologic Log

Date: Logged By: GAJ - JMS.

Code	From	To	Recov.	No.	Unit	Description
1	10–14	16–20	22–24	26–28	30–34	35
211.6	6925	6944		84	5B64	Bio
				5		Mod hrd to hrd, purp brn, qtz musc. bio, non calc, PS2 fol., altered phyll. Most bio rich alt. phyll seem to date this hole. On last unit note S2 & shear folia dk grn, poss. serptine bearing. Back to this unit, upper contact is fault breccia, shear surfaces ~60° to c.a. S1 almost ∥ c.a. through entire unit, true width of this lith ~ same dia of NQ core. Unit intact to mod. broken.
212.4	6944	6970		85	5C6	±3
				6		Med - dk grn, Strongly fol., loc. leop rk textured, ~~tx~~ var. calc., wkly speckled Chl. phyll. Unit is mod broken to loc. incip. gouged. Short sections resemble unit # 83 + remainder resembles unit 80. also resembles any other foliated meta basite in the district. Lower contact against 20 cm of altered Biotite bearing phyll at top of next unit
211.8	6970	6983		86	5B62	
				7		Dk gry, mod hard to mod soft, non calc, PS2 fol., homog Phyll. Contains minor qtz Po banding. Mod. broken
213.4	6983	7003		87	3G0	[5B6]
				8		Mod soft, med. grey, PS2 fol, non calc, homog phyll. Color med gry to grnish gry. In detail unit consists of med dk gry rel. soft pelite interlayered w grnish gry very slightly more qtzose bands. Unit is rubbly & gouged to 698.6 inlet., remainder broken, prob. fault in upper unit, prob. not a major fault
213.8	7003	7018		88	5G3	(3G48) 50:50
				9		Med gry grn, calc Chl phyll, Local "leop rk" texture esp. near top & bottom, dk grn to med grn mottled S2 surfaces. Unit mod. broken. Strongly PS2 foliated. Prob. include some alt. phyll. in centre

DDH 8.0.V.X.0.1 (2–8)

Cyprus Anvil Mining Corp.
Lithologic Log

Date: Logged By: GAJ - JMS.

Code	From	To	Recov.	No.	Unit	Description
1	10–14	16–20	22–24	26–28	30–34	35
						Middle part of unit lacking leop rk text. Has smooth med yllwish grn muscovitic folia ∴ presume to be altered phyll.
	7018	7055		89	3G0	
215.0				90		Mod soft, med gry to grnish gry, PS2 foliated, noncalc., homog phyll. Upper portion grnish gry w/ upplying metabasite, bulk is normal grey. Unit mod. broken to rubbly & Poker chippy, minor incip. gouge at top of unit. Top 1m of this unit & top ½ m of last unit have had some post D2 folding of S2 perhaps related to proximity of metabasites or faults or both
	7055	7168		90	3G9	
218.4						Dk. grey to med grey, PS2 foliated, mod hard to mod soft, noncalc. phyll contains minor Po & Py diss. along S2 & in fractures & assoc. w/ v. sparse qtz. sulphide bands. Overall v. homog. but in detail is thin to thick laminated ∥ to S2 in shades of dk gry to med gry. Dk bands are combo of dk S2 folia & orig. banding transposed into S2. Lt bands are more qtzose, f.g. micro lithons after siltstone bands? Unit essentially same as last & next unit except for dker colr due to more abundant dker colred bands.
	7168	7603		91	3G0	(3B0) (3B6) Both minor
231.7				✓		Mod soft to mod hard., med gry to slightly grnish gry, PS2 foliated, generally overall homog., noncalc phyll. S2 foliation surfaces are steely dk to med gry. In detail unit thick to thinly laminated in shades of dk to med gry described above. Unit locally has harder lt grnish gry chl or actin. & very minor bio qtzose bands usually 1cm thick but locally upto 10cm. Thought to represent qtz siltstone bands & of course noncalc. Contains no readily noticable Po porphs. Contains three 0.3m interbands of lt. gry grn invar calc. chl. phyll. possibly representing small 3B tuff bands? No bio noted. These bands are centered at 722.5, 728.1, & 735.5. mod broken to intact.

DDH 80-160-01 (2–8)

Cyprus Anvil Mining Corp.
Lithologic Log

Date: _____ Logged By: GAJ-FMS

Code	From	To	Recov.	No.	Unit	Description
1	10–14	16–20	22–24	26–28	30–34	35
						Thicker qtz siltstones developed 742 → 748. Unit is essentially intact. Some core at 757.4 m (0.4m of core) contains identifiable rabbit type pellets
233.4	7160 3	7162 7		912	31B10	(369)(369) 65:30:5
				3		Interbanded unit consisting of horny, non calc, PS_2 fol, med greyish grn chl phyll. ⓐ dk & lt grn mottled fol'n surfaces. Slight bluish tint to cut surfaces when wet. b) Brnish gry, mod hard to mod soft bio musc ± chl Qtz phyll. resembles aft. phyll seen up hole. ⓐ pale Ay gry fol'n surf. PS_2 fol. + non calc. ⓑ Dk, mod hard non calc, Carbonaceous phyll similar to underlying unit. Chl. phyll top 1m & bottom 2m. Carbonaceous phyll 5 cm at centre of interval. Unit is basically intact
235.5	7162 7	7172 8		913	31G191	(504) minor
				4		Mod hard, dk grey, PS_2 fol, non calc, mod carb., mod siliceous phyll. Unit transitional between 369 & 3E & a borderline, fence sitter, but fits best as 369 & similar in colr to unit #90. Comparable to unit #78, but lighter than unit #71 & the Carb. units above it. Also exhibits strong "Dolo flash". Contains several 0.5 cm to 1½ cm thick variably calc lt tan 5D bands ⓦ sharp ll S_2 contacts & one thicker 5 cm band at 767.1
						10 cm Py actn. band at 770.1 m origin unk. V. Minor Py disseminated along S_2 & fractures. Unk. whether 5D bands are micro tuffs or thin infolds of adjacent metabasite or other. Unit Mod. broken to intact local incip. gouge or rubble, all minor
236.5	7172 8	7176 1		AA	31G10	
				5		As above. Mod. broken, messy faults
		WT				

DDH 1.80.V.X.0.1 (2–8)

Cyprus Anvil Mining Corp.
Lithologic Log

Date: ____ Logged By: GAJ - JML

Code	From	To	Recov.	No.	Unit	Description
1	10–14	16–20	22–24	26–28	30–34	35
	7761	7787		95	3B	(3G4 Bio 8) [3D1] (3G91) (3F9) 80:10:10: trace
237.3				6		Interbanded unit consist. of following lith: (a) Mod grnish gry, non calc, PS2 fol, mod soft Chl musc. phyll (b) Mod hard quartz musc chl bio phyll resembling alt. phyll noted up hole & (c) dk gry mod. hard, non calc, PS2 fol, phyll. Green rocks appear to be metabasite derived however some possibly altered phyllite. Brn & grn alt. phyll.? resemble Calc silicates & prob called 3D1 in other holes. Chloritic phyll are dominantly in top ½ m & bottom 1.8 m of unit. 3 cm of dk grey finely xtalline marble 0.6 m from top of unit. Mod broken to intact
237.5	7787	7796		96	3G91	
				7		Mod hard, dk gry, PS2 foliated, non calc, homog phyll. as above. Mod broken to intact
238.2	7796	7816		97	3B10	Bio [3D] (3G91)
				8		Interbanded unit. Major lith. is non calc., mod hard, med bluish grn w̄ brn strks & patches, Chl, actin, hbl? phyll. Interlayered w̄ mod hard, non calc, PS2 fol dk gry & grnish gry Phyll. The 1st unit resembles Calc silicates of CNR 7601. also resembles metabasites described just up hole & those to come down hole. Remainder of unit is thin interlayering of dk grey & green rks w̄ may be calc silicates or chl/actinolite in veins. Metabasite? is top 0.6 m of unit & bottom 1.3 m & remainder of unit is in middle & post D2 fold nose. Unit is intact
238.6	7816	7832		98	3G91	(3B3 minor) ± Bio minor 90:10
				9		Mod hard, dk grey, fucking non calc, PS2 fol, carb phyll. interbanded w̄ minor slightly calc. med green to bluish grn Chl rich Phyll.. Latter rock is 0.2 m at center of unit locally minor Bio assoc. Unit is intact. also 2 cm 3B band w̄ 5 mm bio musc qtz salvage 0.4 m from EOI. Looks like microscopic version of big meta basites up around 680 m. Is it a tuff or an intrusive?

DDH 80VX01 (2–8)

Cyprus Anvil Mining Corp.
Lithologic Log

Date: ____ Logged By: GAJ - JMB

Code	From	To	Recov.	No.	Unit	Description
1	10–14	16–20	22–24	26–28	30–34	35
	783 2	787 2		99	3G0	±3 minor → 3B bio ±3 minor
239.9				100		Dk grn w̄ bluish tint, str. PS2 foliated, finely speckled, weakly & loc. calc.
						homogenous chl. rich phyll + bbl? S2 fol. are dk grn. Unit has
						patchily developed bio, esp. near margins where it is finer grained & there
						resembles the top & bottom of unit # 97. Unit is intact.
240.0	787 2	787 6		100	3G0	± 8
				1		Homog, noncalc, med gry phyll to grnish gry. w̄ gradually loses
						grn & ↑ gry colr away from metabasite. Unit intact
240.8	787 6	790 2		101	3G9	1 minor
						Mod hard to mod soft dk gry, non calc. PS2 fol., homog phyll.
				✓		mod broken, rubble at core at 788.8. Rect rabbit pellets identified.
244.2						rubble & ind. gouge at EOI.
	790 2	801 3		102	3G0	"calc silicaty"
				3		Mod soft to mod hard PS2 fol, med grnish gry, non calc, homog phyll
						Grnish colr due to grn mineral in slightly more qtzose microlithons
						actinolite? or is it just chlorite. Resembles some rocks in hole
						A-007. Very similar to above 3G's, just a little bit greener
						The unit is rubbly TOI to 790.9, possible minor flt at TOI.
						Core intact to mod broken to 794.5. Rubbly to v. broken
						related to minor steep fault from 794.5 to 796.4 and from
						796.4 to EOI it is intact.
246.0	801 3	807 4		103	3B0	± 3 minor (3G 84 ± B10?) 75 : 25
				4		lt. to med grn, f.g., v. strongly PS2 fol., Chl musc phyll. S2
						surfaces are med grn to dk grn mottled. Some have a musc.
						Sheen. Rock is largely homog. invar. but wkly calc. & has
						Interlayered w̄ it a gryer more muscovitic, invar. bio, non
						calc phyll.

DDH 80VX01 (2 — 8)

Cyprus Anvil Mining Corp.
Lithologic Log

Date: _____ Logged By: GAJ - JMB

Code	From	To	Recov.	No.	Unit	Description
1	10 14	16 20	22 24	26 28	30 34	35
						Latter rk may be an altered 3G phyll. It has greyish grn to dk grn S2 fols & occurs as 2 bands: 804.5 - 804.8m, 805.1 - 806.2,
	8107 A	18 17 8		1014	13 90	"calc silicaty" ± Bio minor
245.2.						Mod soft - mod hard, PS2 fol, med gry to grnish grey, noncalc phyll. Steely dk - med gry fol'n surfaces v. similar to unit #103 except contains minor bio assoc. w actinolite in grn more qtzose bands,
						Contains 20 cm interlayer of brn-grn poss. calc. silicate at 816.7, sim. to calc silicates of CVR hole, slightly calc grn & brn, poss. calc sill. band or 3D band, at about 812.3m
						~20 cm. Unit is intact.
						EOH III - good reference hole for vancouver Plutonic lithologies
						Most logging - Best of 1984
						- NY Review of Drill Logs
						Breathtaking from collar to end .... can't put down.
						Christian Sci monitor

C.A.M.C. 1981 - E - 3A

DDH 80VX01 (2–8)

Cyprus Anvil Mining Corp.
Structural Log

Page 1 of _____

Date: _____ Logged By: GAJ-

Code	From	To	Feature	Sym	S_0 Dip Direct.	S_1 Dip Direct.	S_2 Dip Direct	Description
1	10–14	16–20	22–24	26	28–32	34–38	40–44	
S		1475	CS12	S		410 0100	57	
S		1568	CS12	Z			615	
S		1600	CS12	Z			612	
S		1680	CS12				710	S_1 prob. very steep
S		1752	CS2				610	
S		1803	PS12				612	
S		1852	PS12				710	
S		1883	PS12				715	
S		1979	PS12				610	
S		10124	PS2				615	
S		10150	CS12				715	CS_n = 40/350
S		11108	PS12				610	
S		11179	PS12				710	
S		11228	PS12				613	
S		11285	CS12				615	
S		11301	CS12	Z			715	
S		11340	CS12				710	
S		11388	CS12				616	
S		11422	PS12				613	
S		11493	CS12				710	
S		11547	PS12				710	→ CS2
S		11617	CS12	Z			616	
S		11690	PS12				710	
S		11720	CS12	S			608	
S		11776	PS12				710	
S		11821	PS2				716	
S		11892	PS12				615	
S		11978	CS2	D			510	
S		12023	CS12	D			518	
S		12016	CS12				615	
S		12112	PS12				615	
S		12184	PS12				715	
S		12263	CS12				715	App. to be a fold hinge in middle of unit 223m
S		12370	PS12				810	May be S_1
S		12426	CS2				80	
S		12476	PS12				712	

DDH 80VX01 (2–8)

Cyprus Anvil Mining Corp.

Structural Log

Page 3 of ____

Date: ____ Logged By: ____

Code	From	To	Feature	Sym	S_0 Dip Direct.	S_1 Dip Direct.	S_2 Dip Direct	Description
1	10–14	16–20	22–24	26	28–32	34–38	40–44	
S		4634	PS2				72	
S		4703	PS2				70	
S		4781	PS2				71	
S		4860	PS2				70	
S		4945	PS2				75	
S		4995	PS2				82	
S		5055	PS2				68	
S		5097	PS2				75	→ CS2
S		5158	PS2				70	
S		5200	PS2				85	
S		5258	PS2				75	
S		538	PS2				85	
S		5418	PS2				70	
S		5490	PS2				74	
S		5565	PS2				76	
S		5627	PS2				75	
S		5657	PS2				80	
S		5736	PS2				75	
S		5782	PS2				66	→ CS2
S		5846	PS2				85	
S		5870	PS2				73	
S		5957	PS2				65	
S		5986	PS2				74	
S		6039	PS2				60	
S		6112	PS2				75	
S		6176	PS2				72	
S		6239	PS2				82	
S		6304	PS2				82	
S		6330	PS2				72	
S		6368	PS2				62	
S		6482	PS2				82	
S		6555	PS2				82	
S		6623	PS2				85	
S		6707	PS2				60	CSN = 15/000
S		6779	PS2				78	
S		6845	PS2				73	

DDH _____ (2 – 8)

Cyprus Anvil Mining Corp.
Structural Log

Date: _____ Logged By: GAJ – JMS

Code	From	To	Feature	Sym	S_0 Dip Direct.	S_1 Dip Direct.	S_2 Dip Direct	Description
1	10 – 14	16 – 20	22 – 24	26	28 – 32	34 – 38	40 – 44	
S		12512 1	PS12				710	PS2 – C
S		12517 7	PS12				712	" "
S		12612 7	PS12				618	→ CS2
S		12617 3	PS12				616	
S		12713 4	PS12				80	→ CS2
S		12718 7	CS12				612	→ PS2
S		12814 6	PS12				718	
S		12914 7	CS12				619	
S		12916 0	PS12				712	
S		13013 0	PS12				710	
S		13111 8	PS12				715	
S		13116 3	PS12				710	
S		13213 0	PS12				694	
S		13217 5	PS12				418	
S		13312 8	PS12				518	Z fold 5' uphole
S		13317 3	CS12	Z			710	
S		13412 5	PS12				665	
S		13416 7	PS12				710	
S		13515 7	CS12	S			615	
S		13611 8	PS12				715	
S		13615 5	PS12				715	
S		13714 4	PS12				715	
S		13774 4	PS12				717	
S		13815 8	PS12				718	→ CS2
S		13818 7	PS12				713	
S		13914 5	PS12				618	
S		14010 6	PS12				712	
S		14069 9	PS12				615	→ CS2
S		14100 0	PS12				618	
S		14119 1	PS12				812	
S		14214 5	PS12				710	
S		14218 3	PS12				718	
S		14378 6	PS12				715	
S		14416 5	PS12				815	→ CS2
S		14512 7	PS12				715	
S		14516	PS12				815	

DDH 80VX01 (2–8)

Cyprus Anvil Mining Corp.
Structural Log

Page 4 of ____

Date: ____ Logged By: ____

Code	From	To	Feature	Sym	S_0 Dip Direct.	S_1 Dip Direct.	S_2 Dip Direct	Description
1	10–14	16–20	22–24	26	28–32	34–38	40–44	
S		6906	PS2				48	
S		6965	PS2				60	
S		6990	PS2				70	
S		7056	PS2				75	
S		7133	PS2				55	
S		7170	PS2				65	
S		7220	PS2				67	
S		7306	PS2				68	
S		7335	PS2				70	
S		7390	PS2				75	
S		7460	PS2				72	
S		7519	PS2				82	
S		7548	PS2				77	
S		7615	PS2				65	
S		765	PS2				80	
S		7707	PS2				78	
S		7815	PS2				82	
S		7874	PS2				71	
S		7920	PS2				80	
S		7966	PS2				82	
S		8018	PS2				55	
S		8060	PS2				70	
S		8147	PS2				80	
S		8175	PS2				82	

DDH FA80 VX1 (2 – 8 metres)

Cyprus Anvil Mining Corp.

~~Structural~~ Log

Page _____ of _____

Date: _____ Logged By: _____

Code	From	To	Feature	Sym	S_0 Dip Direct.	S_1 Dip Direct.	S_2 Dip Direct	Description
1	10 – 14	16 – 20	22 – 24	26	28 – 32	34 – 38	40 – 44	
F	46	527	2B					
F		528	C?					
F	528	545	2B					
F	608	625	2BR	6				
F	644	649	3B					
F	649	694	2B					
F	694	760	2BG					
F	779	910	2BG	8				
F	914	944	3BR					
F	910	914	RG					
F	944	1070	1B					
F		1010	1F					30° to CA
F	1070	1090	1GR					
F	1090	1138	1B					
F	1138	1174	3BR					minor fault?
F	1174	1468	1B					
F	1468	1513	1B					
F		1514	1RG					small flt at 40° to CA
F	1573	1583	2BR					
F	1583	1623	1F			40 090		20
F	1623	1631	3B					
F	1648	1673	R3B					
F	1680	1734	1B					
F		2010	1G					
F	203	2057	1BG					
F	2057	2099	1B					
F		2109	1G					
F	2805	2845	1XQ					
F	2845	2915	XQ					
F	2915	2920	S			99 999		30
F	2920	2940	2BR					40 to CA = flt at 293 m
F	3040	3044	1B					
F	3067	3080	2B					
F	3080	3127	1B					
F	3173	3233	3BG					
F	4105	4135	1R					

DDH FA80VX1 (2 — 8)

Cyprus Anvil Mining Corp.
Structural Log

Page _____ of _____

Date: _____ Logged By: _____

Code	From	To	Feature	Sym	S_0 Dip Direct.	S_1 Dip Direct.	S_2 Dip Direct	Description
1	10 — 14	16 — 20	22 — 24	26	28 — 32	34 — 38	40 — 44	
F		4155	G					
F	3183	3184	1R					
F	3977	3990	1RF					30° to CA steep slicks
F	5142	5145	2BR					
F	4615	4627	2BG					
F	4615	4658	RC?					
F	4617	4685	2BR					
F	4799	4780	3XD					
F		5213	1F			210	325	
F	5276	5309	RG					
F	5309	5311	3FXR					45° to CA
F	5309	5352	RG					
F	5352	5395	XD					
F	[illegible]	5357	1FX					
F		5372	1FX					20° to CA
		5385				310	085D	
		54p8	1FX					20–45° to CA subhorstek

C.A.M.C. 1981 – E – 4

plot @ 1000 scale.

CYPRUS ANVIL MINING CORPORATION

DIAMOND DRILL CORE LOG

Hole Number: 80-VX-1

Project: Vangorda

Location: VANGORDA [illegible]

Claim: _____

Terr. Plane Co-ords.: _____ N

_____ E

Grid Co-ords.: _____

_____

Elevation: _____

Total Depth: 811.5 m

Fabric Orientation Diagram:

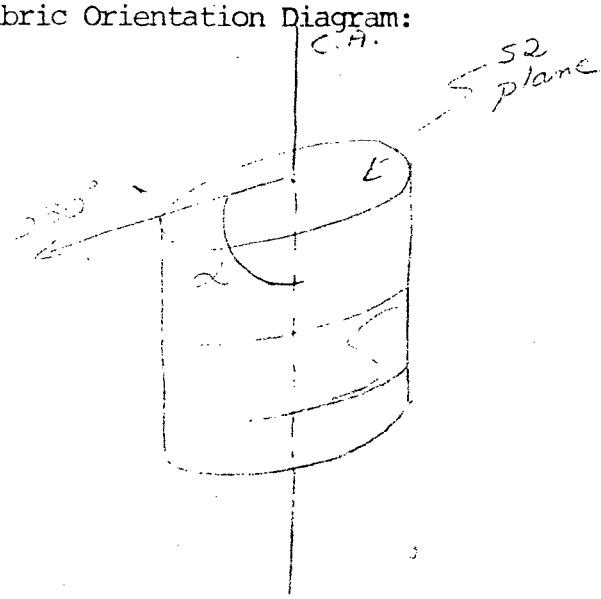

All symmetry determinations looking

[illegible] with S2 dipping

[illegible] with dip azimuth 220°.

Purpose: diamond drilling w/s S/3 contact d.d. from Vangorda.

Logged by: D.T.H. & T. Date(s) Logged: _____

Drilling Contractor: Arctic D.D. Core: Size From To Collar Cased and Capped: _____

_____ _____ _____

_____ _____ _____

_____ _____ _____

Started: _____ Completed: _____

DDH [illegible]

[illegible] Core Log

Code	Drillhole	Elevation	[illegible]	Easting	Comments
1	2 8	10 16	[illegible] 22	24 32	34
T	80-VX-1	9999	9999	9999	METERS

Code	Drillhole	Depth		Zero Angle	Time Azimuth	Comments
1	2 8	10	14	22	24 32	34
R	80-VX-1	0	0	[illegible]	[illegible]	AT COLLAR
R	80-VX-1	5[illegible]	3	[illegible]	[illegible].0	
R	80-VX-1	1[illegible]	8	[illegible]	[illegible]9.0	
R	80-VX-1	23[illegible]	2	[illegible]	[illegible].0	
R	80-VX-1	327	6	[illegible]	[illegible].0	
R	80-VX-1	510	5	[illegible]	[illegible].0	
R	80-VX-1	602	0	[illegible]	[illegible].0	
R	80-VX-1	693	4	[illegible]	[illegible].0	
R	80-VX-1	754	3	[illegible]	[illegible]15.0	
R	80-VX-1	781	8	[illegible]	[illegible]17.0	
R	80-VX-1	815	3	[illegible]	[illegible].0	
R						
R						
R						
R						
R						

Code	Drillhole	Comments, E[illegible] Remarks, Snivellings and/or Lewd Suggestions
1	2 8	10

DDH 8[illegible] 2 8

Cyprus Anvil Mining Corp.

Lithologic Log

Logged By: JWM

Code	From	To	Unit	Code	Description
1	10 14	16 20	22 23	25 27	
L	100	460	01	1#	CASING
L	460	527	02	5C10	numerous qtz-carbonate pods + stringers, calcareous throughout, characteristic (diagnostic?) flesh coloured flakey mineral locally present, minor interbanded 5D
L	527	528	03	5C10	Gouge zone (possibly mud from previous run).
L	528	542	04	5C10	as in unit 02, grain size coarsening towards end of interval - almost as of clastic texture.
L	542	560	05	5D10	distinctly different from "normal" laminated banded 5D; phyllitic non-calcareous, non-chloritic "wispy" bands 5D like lith in tuffaceous phyllite. locally pink flaky mineral indicative of 5C
					overall ≈ 5B7
L	560	567	06	5C10	as in unit 04, 02 - abundant carbonates
L	567	649	07	5D10	as in unit 05, locally ≈ 460 but this is probably related to 5C overall = 5D = 5B7 = non-calcareous
L	649	675	08	5C10	coarse grained vermont abundant pink flaky mineral? andalusite?, non-calc.
L	675	682	09	5C10	normal calcareous (zebra) 5C could compare unit 8 with unit 2 because of absence of andalusite?
L	682	694	10	4Q10	qtz-carbonate pod
L	694	721	11	5C10	locally calcareous similar to unit 8, calcareous
L	721	735	12	5C10	[illegible] NOTE 72.1 - 75.3 m - 0.9 m in c rec.
L	735	755	13	5B10	
L	755	796	14	[illegible]	[illegible] locally calcareous, fresh, abundant [illegible] pink flesh andalusite - carbonate

DDH 80-VX-1 (2 … 8)

Cyprus Anvil Mining Corp.
Lithologic Log

Logged By: JWM

Code (1)	From (10–14)	To (16–20)	Unit (22–23)	Code (25–27)	Description
L	796	799	15	5C0	gouge
L	799	807	16	5C0	As in unit 14, minor zebra
					type 5C
L	807	866	17	5C0	as in unit 14, fresher appearance –
					non-calcareous throughout, locally
					coarse grained, very fine grained
					dalusite?
L	866	881	18	5C0	As in unit 17, calcareous, minor
					CO2 at beginning of interval.
L	881	915	19	5C0	As in unit 17, locally coarse
					grained very fresh non-calcareous.
L	915	945	20	5B0	white muscovite bearing
L	945	1176	21	5B0	"normal" 5B calcareous throughout
					po > py po not abundant.
L	1176	1673	22	5B0	As in unit 21, but overall
					[illegible] in colour → 5BO2 again
					po >> py; py not observed
L	1673	1734	23	5D0	[illegible] banded, very calcareous
					py ≤ po po? as fine diss. in
					[illegible] contact with overlying
					[illegible] somewhat diffuse over 3m
L	1734	1758	24	5D0	[illegible] – possibly minor 5B
					also contact region with 5C, calc.
L	1758	1773	25	5C0	minor 5D, well banded, calc.
L	1773	1952	26	5C0	massive, calcareous, characteristic
					[illegible] fresh cal andalusite? py > po
					contact with 5D ~~at~~ at 195.2
					[illegible] by several cm. of
					[illegible] clay
L	1952	2004	27	5D0	calcareous, minor (10-15%) locally
					[illegible] 5C, abundant
					[illegible] carbonate [illegible].
L	2004	2018	28	5C0	As in unit 26, minor gouge
L	2018	2104	29	5D0	[illegible] unit 27
L	2104	2108	30	5C0	[illegible] coarse grained – cataclastic
					[illegible]

DDH 20-VX-L

Cyprus Anvil Mining Corp.

Lithologic Log

Logged By: IWM

Code	From	To	Unit	Code	Description
1	10 14	16 20	22 23	25 27	
L	12110 8	12135 7	31	5IC10	As in unit 26 locally minor 5D interbanded.
L	12135 7	12147 3	32	5ID10	Commonly banded, calcareous
L	12147 3	12178 6	33	5BP	minor calcareous grey chyllite
					5D??? ay, abundant qtz-carbonate
					veins, veinlets foliation
					to S_2
L	12179 6	12185 7	34	5BIC	As in unit 33, but
					minor discontinuous qtz-carbonate
					veins non-cutting S_2, difficult
					to determine a preferred orientation
					locally veins accurate to S_2
					with interval = 90°
L	12185 7	12192 1	35	5BP	As in unit 34, but qtz-carb.
					veinlets more dominant and
					locally appears (5B) as a breccia
					with qtz-carbonate infillings
L	12192 1	12192 9	36	5IB6	Fault breccia/gouge
L	12192 9	12193 3	37	5IB6	Fault gouge
L	12193 3	12193 8	38	5B16	As in unit 36.
L	12193 8	12198 3	39	5BP	Similar to unit 34, more cutting
					qtz carbonates not as abundant.
L	12198 3	13010 4	40	5EID	50 50 5C 5D interbanded, calcareous
L	13010 4	13013 1	41	5BIC	Unit > biotite + muscovite
L	13013 1	13037	42	5DIC	As
L	13037	13041	43	5CIC	" 5D "looking"
L	13041	13068	44	5DIC	minor interbedded 5D
L	13068	13088	45	5IB10	interbanded 5D = 20%
L	13088	13127	46	5IBP	As in unit 41
L	13127	13167	47	5CIC	calcareous, characteristic silk-flesh and.
L	13167	13210	48	5CIC	As in unit 47, but non-~~et~~ calcareous.
L	13210	13233	49	5CIC	calc. 5D looking
L	13233	13240	50	5IDIC	Very F.g. minor carbonates.
L	13240	13244	51	5CIC	As in unit 49
L	13244	13262	52	5IDC	As in unit 50, minor intervals
					As in unit 51

DDH [illegible] 2 8

Cyprus Anvil Mining Corp.
Lithologic Log

Logged By: JWM

Code	From	To	Unit	Code	Description
1	10 14	16 20	22 23	25 27	
L	3262	3299	53	5B[illegible]	[illegible]
L	3299	3306	54	5D6	[illegible] in unit 5D
L	3306	3318	55	5B0	
L	3318	3349	56	5D0	minor 5B, calc. finely banded = S_2
L	3349	3374	57	5B0	→ 5B02, dark in colour - dark grey
L	3374	3438	58	5B0	→ 5B06, as in unit 57 po>py
L	3438	3470	59	5B0	as in unit 57
L	3470	3490	60	5C0	→ 5D looking
L	3490	3542	61	5C0	banded, calcareous
L	3542	3602	62	5C0	30% interbanded 5D throughout
					terval.
L	3602	3722	63	5C0	distinct pink andalusite present locally
					well banded
L	3722	3739	64	5D[illegible]	typical 5D-5B inter-tongueing
					[illegible] margins of 5C.
L	3739	4025	65	5B0	[illegible] in unit 57, po>py,
					locally very minor 5D; abundant
					[illegible] carbonate bands -
L	4025	4043	66	5B7	→ 5B73; minor 5D3 interbanded
L	4043	4218	67	5B0	
L	4218	4310	68	5B0	+ bio.; possibly 5B73 @ the chl → bio.
					meta. transition.
L	4310	4317	69	5C0	50:50 5D3:5C3; 5C is "grainy"
					looking
L	4317	4390	70	5B0	+ bio; possibly interbanded 5B73, 5B0
L	4390	4402	71	5D0	70:30 5D3:5C3
L	4402	4409	72	0E2	→ 0E29?; plag phenos (~1mm) in a
					[illegible]ty green soft calc. matrix; cts. look intrusi[illegible]
L	4409	4601	73	5B0	+ bio; c.f. unit 68
L	4601	4639	74	5D3	w/20% 5B73
L	4639	4651	75	5B0	
L	4651	4657	76	5B0	? sandy "fault"(?) zone; some 5B0 frags.
L	4657	4668	77	5D5	[illegible]:30 5D3:5B0+5B73
L	4668	4686	78	5B0	+ bio; c.f. unit 70
L	4686	4708	79	5D3	w/10% 5C3? - grainy, poorly banded -

DDH 80-VX-1 (2 / 8)

Cyprus Anvil Mining Corp.

Lithologic Log

Logged By: DJH

Code	From	To	Unit	Code	Description
1	10 14	16 20	22 23	25 27	
L	417 08	417 53	810	5B10	1 bio; cf unit 70; qtz-carb veinlets
L	417 53	513 00	811	5B10	w/ occ. bio; in general does not look
					like typical 5B (lots of pressure
					solution colour striping) but contains
					definitive mineralogy.
L	513 00	513 04	812	5B1D	70:30 5B0:5D3; bxia zone w/ gouge
					clts.
L	513 04	513 14	813	5B10	cf unit 81
L	513 14	610 18	814	5B10	w/ 30% 5B6; cf unit 81 but some
					non-calc ints.
L	610 18	611 23	815	5G11	minor strat py in siliceous bands (5A19)
L	611 23	611 47	816	5D16	~1% sheared out chl. mottles; minor
					marcasite; small band 5A 613.9-614
L	611 47	613 17	817	5A11	minor py as blebs and fract fillings.
L	613 17	614 17	818	5E10	phyllitic marble
L	614 77	615 92	819	5A11	cf unit 87
L	615 92	616 39	910	3D11	purple bio banding (distinctive)
L	616 39	616 65	911	3B10	w/ minor 3C
L	616 65	616 88	912	3C12	dark green-grainy
L	616 88	617 60	913	3E11	
L	617 60	617 70	914	3D11	cf unit 90
L	617 70	617 78	915	3C13	cf unit 92 only $CO_3^=$ bearing
L	617 78	618 27	916	3B12	meta-volc?
L	618 27	618 94	917	3D11	cf unit 90
L	618 94	619 03	918	3B1C	50:50 3B2:3C3 cf units 96 & 95
L	619 03	619 13	919	3G10	
L	619 13	619 25	920	3C13	cf unit 95
L	619 25	619 50	921	3D11	cf unit 90
L	619 50	619 72	922	3C13	minor 3B2
L	619 72	710 03	923	3G10	→ 369 locally
L	710 03	710 18	924	3C13	minor 3B2
L	710 18	710 54	925	3G10	→ 369 locally
L	710 54	711 69	926	3E10	→ 369 "
L	711 69	715 17	927	3B10	minor 3BC bands 722.5-722.8,
					727.9-728.2, 735.7-735.9
L	715 74	715 80	928	3G10	? fault zone - clay and bxia frags

DDH 80-XX-1 (2 8)

Cyprus Anvil Mining Corp.

Lithologic Log

Logged By: DJH.

Code	From	To	Unit	Code	Description
1	10 14	16 20	22 23	25 27	
L	17158 0	17161 0 3	09	31G10	
L	17161 0 3	17161 0	10	31B1C	?0:30 382:383
L	17161 0	17161 8	11	31G10	
L	17161 8	17162 6	12	31B12	
L	17162 6	17172 8	13	31E12	→3E21; →369 locally
L	17172 8	17171 6 2	14	31G10	
L	17171 6 2	17171 6 9	15	31B12	
L	17171 6 9	17171 7 3	16	31G10	
L	17171 7 3	17171 8 8	17	31B12	
L	17171 8 8	17171 9 7	18	31G10	
L	17171 9 7	17181 5	19	31D11	
L	17181 5	17181 3 4	210	31G10	w 382 band 782.3 - 782.5
L	17181 3 4	17181 7 2	211	31D11	?cy/minor 3C
L	17181 7 2	17181 7 8	212	31B12	
L	17181 7 8	17191 0 2	213	31E12	
L	17191 0 2	18011 2	214	31G10	
L	18011 2	18011 7 4	215	31B12	
L	18011 7 4	18111 7 8	216	31G10	
		EOH			

DDH 80-VX-1 (2 8)

Cyprus Anvil Mining Corp.
Structural Log

Logged By: JWM

Code (1)	From (10–14)	To (16–20)	Feature (22–24)	Sym (26)	S_1 Dip (28–32)	S_2 Dip (34–38)	Direct.	Description
S		460	PS2			64	220	R region 46.0 - 91.5
S		500	PS2			45	220	
S		570	PS2			68	220	
S		625	PS2			65	220	
S		655	PS2			69	220	
S		721	PS2			70	220	
S		777	PS2			73	220	
S		828	PS2			70	220	
S		834	PS2			75	220	
S		915	F2	R		70	220	Rock Region to
								91.5 - 5C, 5D
S		956	F2	P		81	220	PS2 region 91.5 - 95.6
S		967	F2	Z				Z region 95.6 - 96.7
S		979	F2	P		55	220	PS2 region 96.7 - 97.9
S		1008	CS2			56	220	Z region 97.9 - 105.4
S		1054	F2	Z		70	220	PS2 region 105.4 - 110.9
S		1109	F2	P		73	220	Z region 110.9 - 111.7
S		1117	F2	Z				S region 111.7 - 113.4
S		1134	[illegible]	[illegible]		78	220	PS2 region 113.4 - 121.1
S		1211	F2	P		80	220	S region 121.1 - 128.9
S		1259	CS2			64	220	
S		1289	F2	S		68	220	
S		1317	CS2			69	220	
S		1337	F2	M		67	220	M region 128.9 - 133.7
S		1362	F2	Z		73	220	Z region 133.7 - 136.2
S		1392	F2	S		65	220	S region 136.2 - 139.2
S		1406	F2	Z		73	220	Z region 139.2 - 140.6
S		1434	F2	P		75	220	PS2 region 140.6 - 143.4
S		1464	F2	[illegible]		78	220	S region 143.4 - 146.4
S		1495	F2	Z		70	220	Z region 146.4 - 149.5
S		1520	F2	M		70	220	M region 149.5 - 152.0
S		1535	F2	Z		58	220	Z region 152.0 - 153.5
S		1546	F2					S region 153.5 - 154.6
S		1582	F2	P		69	220	PS2 region 154.6 - 158.2
S		1604	F2	Z		75	220	Z region 158.2 - 160.4
S		1617	F2	[illegible]		[illegible]	220	S region 160.4 - 161.7

DDH [illegible] 2 8

Cyprus Anvil Mining Corp.
Structural Log

Logged By: IWM

Code	From	To	Feature	Sym	S_1 Dip Direct.	S_2 Dip Direct.	Description
1	10 14	16 20	22 24	26	28 32	34 38	
S		1663	F2	Z		70 220	Z region 161.7 - 166.3
S		1683	PS2			70 220	PS2 region 166.3 - 170.8
S		1708	F2	P		72 220	M region 170.8 - 173.0
S		1730	F2	M		72 220	D.D. region 173.0 - 173.7
S		1737	F2	D			Z region 173.7 - 176.6
S		1755	CS2	Z		72 220	
S		1766	F2	Z		70 220	
S		1818	PS2			64 220	
S		1851	PS2			66 220	
S		1912	PS2			85 220	
S		1973	PS2			65 220	
S		2004	PS2			70 220	
S		2034	PS2			66 220	
S		2075	PS2	R		63 220	R region 1766 - 2075
							5C
S		2090	CS2	Z		55 220	Z region 207.5 - 209.0
S		2098	CS2	S		62 220	S region 209.0 - 209.8
S		2126	PS2			71 220	~~PS2~~ R region 209.8 - 238.5
S		2156	PS2			73 220	
S		2187	PS2			65 220	
S		2248	PS2			60 220	
S		2278	PS2			54 220	
S		2339	PS2			70 220	
S		2385	PS2	R		63 220	Z region 238.5 - 243.1
S		2421	CS2			78 220	
S		2431	F2	3			S region 243.1 - 251.9
S		2463	CS2			63 220	
S		2519	F2	E		66 220	Z region 251.9 - 270.4
S		2550	CS2			80 220	
S		2584	CS2			77 220	
S		2643	CS2			69 220	
S		2704	F2	3		72 220	S region 270.4 - 273.2
S		2732	F2	E			Z region 273.2 - 285.6
S		2760	CS2			75 220	
S		2820	CS2			74 220	
S		2856	F2	Z			R region 285.6 - 293.5

DDH 80-VX-1 (2 8)

Cyprus Anvil Mining Corp.

Structural Log

Logged By: DJH.

Code	From	To	Feature	Sym	S_1 Dip	S_1 Direct.	S_2 Dip	S_2 Direct.	Description
1	10 14	16 20	22 24	26	28	32	34	38	
S		2885	PS2				74	220	(zone of intense veinlets
S		2935	F2	R			62	220	obscuring D2 sym.)
S		2956	CS2				77	220	M region (subequal S&Z
S		2970	F2	M					293.5 - 297.0
S		3000	CS2				70	220	S region 297.0 - 304.8
S		3048	F2	S					R region 304.8 - 306.8
S		3060	PS2				67	220	
S		3068	F2	R					S region 306.8 - 312.7
S		3123	CS2				73	220	
S		3127	F2						R region 312.7 - 321.0
S		3184	PS2				40	220	
S		3210	F2	R					M region 321.0 - 323.3
S		3233	F2	M			61	220	R region 323.3 - 325.7
S		3257	F2	R					R Z region 325.7 - 329.6
S		3296	F2	Z			55	220	R region 329.6 - 334.7
S		3347	F2	R			70	220	Z region 334.7 - 347.1
S		3405	CS2				70	220	
S		3466	CS2				70	220	
S		3471	F2	Z					R region 347.1 - 354.2
S		3527	PS2				74	220	
S		3542	F2	R					M region (equal S&Z)
S		3588	CS2				73	220	354.2 - 360.6
S		3606	F2	M					R region 360.6 - 372.5
S		3649	PS2				75	220	
S		3695	PS2				78	220	
S		3725	F2	R					Z region 372.5 - 378.5
S		3755	CS2				71	220	
S		3785	F2	Z					M region 378.5 - 384.2
S		3800	CS2				75	220	(equal S&Z)
S		3842	F2	M					Z region 384.2 - 396.0
S		3856	CS2				75	220	
S		3917	CS2				69	220	
S		3960	F2	3			70	220	S region 396.0 - 398.1
S		3981	F2	E					Z region 398.1 - 409.9
S		4025	CS2				76	220	
S		4070	CS2				69	220	

DDH 82-VX-1 (2 8) Cyprus Anvil Mining Corp. Page 12 of 14

Structural Log Logged By: DJH.

Code	From	To	Feature	Sym	S_1 Dip Direct.	S_2 Dip Direct.	Description
1	10 14	16 20	22 24	26	28 32	34 38	
S		141099	IFR2	Z			M region (equal S&Z)
S		141130	CIS12			822120	409.9 - 416.0
S		141160	IFR2	M			PS2 region 416.0 - 420.2
S		141190	CIS12			782120	
S		141202	IFR2	P			Z region 420.2 - 434.6
S		141252	CIS12			772120	
S		141316	CIS12			712120	
S		141346	IFR2	Z			PS2 region 434.6 - 437.
S		141371	IFR2	P		752120	Z region 437.1 - 438.9
S		141389	IFR2	Z			R region 438.9 - 440.1
S		141401	IFR2	R			Intrusive 440.1 - 440.9
							- no sym or S2
S		141435	CIS12			822120	Z sym 440.9 - 463.9
S		141496	CIS12			802120	
S		141560	CIS12			792120	
S		141620	CIS12			722120	
S		141639	IFR2	S			S region 463.9 - 469.2
S		141692	IFR2	S		722120	PS2 region 469.2 - 478.7
S		141734	PIS12			642120	
S		141787	IFR2	P		722120	S region 478.7 - 511.2
S		141828	CIS12			802120	(partial PS2)
S		141870	CIS12			772120	
S		141929	CIS12			762120	
S		141990	CIS12			682120	
S		151051	CIS12			802120	
S		151112	IFR2	E		762120	Z region 511.2 - 523.8
S		151170	CIS12			692120	(partial PS2)
S		151238	IFR2	Z		762120	PS2 region 523.8 - 564.2
S		151288	AS12			742120	(minor Z)
S		151334	AS12			622120	
S		151380	PIS12			802120	
S		151440	PIS12			722120	
S		151504	PIS12			712120	
S		151565	PIS12			722120	
S		151626	PIS12			742120	
S		151682	IFR2	P			Z region 564.2 - 578.2

DDH 80-VX-1 (2 8)

Cyprus Anvil Mining Corp.
Structural Log

Logged By: DJH.

Code	From	To	Feature	Sym	S_1 Dip Direct.	S_2 Dip Direct.	Description
1	10 14	16 20	22 24	26	28 32	34 38	
S		5687	CS2			75 220	
S		5751	CS2			69 220	
S		5782	F2	Z			PS2 region 578.2-608.9
S		5813	PS2			70 220	
S		5872	PS2			80 220	
S		5934	PS2			71 220	
S		5996	PS2			65 220	
S		6057	PS2			69 220	
S		6089	F2	P			R region (P?) 608.9-65.
S		6114	PS2			77 220	
S		6178	PS2			69 220	
S		6239	PS2			81 220	
S		6300	PS2			84 220	
S		6360	PS2			70 220	
S		6409	PS2			78 220	
S		6452	PS2			75 220	
S		6497	PS2			80 220	
S		6559	PS2			68 220	
S		6592	F2	R			PS2 region 659.2-663.
S		6623	PS2			76 220	
S		6639	F2	P			R region 663.9-668.8
S		6684	PS2			79 220	
S		6688	F2	R			PS2 region 668.8-677.0
S		6748	PS2			62 220	
S		6770	F2	P			R region 677.0-682.7
S		6809	PS2			73 220	
S		6827	F2	R			PS2 region 682.7-689.4
S		6840	PS2			71 220	
S		6894	F2	P		70 220	R region 689.4-692.5
S		6925	F2	R			PS2 region 692.5-694.
S		6949	F2	P		77 220	R region 694.9-697.1
S		6971	F2	R			PS2 region 697.1-762.6
S		7004	PS2			68 220	
S		7062	PS2			71 220	
S		7105	PS2			67 220	
S		7153	PS2			78 220	

DDH 80-VC-1 (2 8)

Cyprus Anvil Mining Corp.

Structural Log

Logged By: DJH

Code	From	To	Feature	Sym	S_1 Dip	S_1 Direct.	S_2 Dip	S_2 Direct.	Description
1	10 14	16 20	22 24	26	28	32	34	38	
S		7214	PS2				69	220	
S		7275	PS2				65	220	
S		7336	PS2				70	220	
S		7397	PS2				78	220	
S		7458	PS2				71	220	
S		7519	PS2				80	220	
S		7574	PS2				72	220	
S		7626	F2	P			50	220	R region 762.6 – 772.8
S		7693	PS2				85	220	
S		7728	F2	R					PS2 region 772.8 – 801.2
S		7757	PS2				82	220	
S		7815	PS2				79	220	
S		7879	PS2				73	220	
S		7940	PS2				77	220	
S		7992	PS2				82	220	
S		8012	F2	P					R region 801.2 – 807.4
S		8053	PS2				82	220	
S		8074	F2	R					PS2 region 807.4 – 817.8
S		8098	PS2				77	220	
S		8147	PS2				83	220	
		EOH							

CYPRUS ANVIL MINING CORPORATION

Page 1 of _____

DIAMOND DRILL CORE LOG

Date: _____

Hole Number: 81VX01

Reference Fabric Orientation Diagram:

Project: Vangorda Plateau remap

Location: _____

Claim: _____

Terr.Plane Co-ords.: 6903178.952 N

CAMC Mine Survey 593915.005 E

Grid Co-ords: 6E /

Elevation: 1146.2 metres

All symmetry determinations looking

Total Depth: 443.2 metres

NW with 52 dipping

Inclination: -90°

SW with dip azimuth _____.

Purpose: _____

Reason hole Terminated: _____

Logged by: LCP/GAJ

Date(s) Logged: July 29/1984

Drilling Contractor: ARCTIC

	CORE Size	From	To	Collar Cased and Capped:
	Casing	0.0	46.2 metres	

Hole Cemented: _____

Steel down hole: _____

Started: _____ Completed: _____

Cyprus Anvil Mining Corp. Page 2 of _____

DDH 81VX01 (2 8)

Diamond Drill Core Log Date: _____ Logged By: _____

Code	Drillhole	Elevation	Northing	Easting	Units (feet/metres)	R.F.E.	
	2 8	10 16	17 24	25 32	34 39	41 42	
T	81VX01	1146.29	031791.05	939151.0	METRES	SL2	

Code	Drillhole	Depth	Zenith Angle	True Azimuth	Comments
	2 8	10 14	22 26	28 32	34 56
R	81VX01	00	180.0	01.0	AT COLLAR
R			.	.	
R			.	.	
R			.	.

DDH 81VX01 (2 — 8)

Cyprus Anvil Mining Corp.
Lithologic Log

Date: _____ Logged By: _____

Code	From	To	Recov.	No.	Unit	Description
1	10 — 14	16 — 20	22 — 24	26 — 28	30 — 34	35
L	00	462		1	#	no recovery - overburden?
L	462	519		2	364	
						soft light med grey noncalc dominantly PS_2 foliated - minor grease bands causing local lithon texture -
						S_2 folia are grey to pale green tinged light silver -
						Interval weath with brick red along PS_2 folia rusty brn on cut surf - grease bands locally porous
						Lower contact gradational to dk grey soft phyllite at 518-519
						pos lith likely Mt Myra 360
						mod bkn to incip gorged. recvy ok
L	519	525		3	400	
						tot $S^=$ ≈ 25%, py, qtz content increases down hole.
						upper portion thinly lam. qtz sulph / dk grey silic phy
						lower part fine carb S_2 folia between coarser (typically 4A) 1cm thick qtz $S^=$ bands
						lower 10 cm is vuggy crackle bxn
						split originally intact
L	525	536		4	400	±3 ±4
						thinly banded quartzose pyritic ore - consisting of 10cm interbands of 4CO with 15% tot $S^=$ (mainly py) and very high grade homogeneous 4E4 [452] and minor thin 4LO micaceous
						split originally intact
L	536	557		5	46 48	~~±~~ ±1 ±9 all minor
						mt as thin fg. black streaks, locally folded, dolo & qtz as minor clasts or bands in py matrix - towards EOI have bxn texture for last 35 cm - top 20cm is rubble otherwise split intact

DDH 81VX01 (2–8)

Cyprus Anvil Mining Corp.
Lithologic Log

Date: _____ Logged By: _____

Code	From	To	Recov.	No.	Unit	Description
	10–14	16–20	22–24	26–28	30–34	35
L	557	560		6	SA6	
						very dk grey to black, non calc, m soft – m hard, carbonaceous phyllite
						all fine rubble – partly maybe splitter induced trash.
L	560	568		7	4E4	±1
						minor qtz clasts 5mm across in poorly banded fg pyritic matrix –
						minor 4D clasts –
						split was intact
L	568	695		8	3G9	∯ minor
						mod soft to mod hard m dk grey to m grey psz Fol.,
						generally non calc phyllite minor qtzose bands/ribbons
						containing minor dole – unit displays "dole flash"
						very minor po bands one one being 2cm thick
						v. thin qtz bands at 64.7
						TOI to 57.9 is mod broken
						57.9 – 59.7 v. broken rubbly ± gouge S_2 distorted by post
						D_2 folds with steep axial planes ~50% recvy
						IND fault
						59.7 – 67.2 = mod broken to locally rubbly ~1m lost somewhere
						67.2 – 67.5 = qtz vein + granite boulder, latter is cave
						67.5 – 69.5 mod broken to poker chippy 20 cm of IND gouge
						at EOI
	695	804		9	3G0	
						mod soft to mod hard, m grey, psz Fol. non calc phyllite –
						contains minor 1cm thick m grey qtzose bands

C.A.M.C. 1981 – E – 3A

Typist aid:
a b c d e f g h i j k l m n o p q r s t u v w x y z 1 2 3 4 5 6 7 8 9 0
the quick brown fox jumped over the lazy dog.
now is the time for all good men to come to the aid of their party

DDH 81.V.X.01 (2 — 8)

Cyprus Anvil Mining Corp.
Lithologic Log

Date: _____ Logged By: _____

Code	From	To	Recov.	No.	Unit	Description
1	10 — 14	16 — 20	22 — 24	26 — 28	30 — 34	35
						TOI - 69.7 = Rubble
						69.7 - 71.0 = m. broken
						71.0 - 71.5 = v. broken to rubbly
						71.5 - 72.8 = m broken
						72.8 - 77.6 = very broken (wall poker chippy) rubble zones .6m core lost.
						77.6 - 78.9 = intact
						78.9 - 80.4 = v. broken local rubble.
L	80.4	81.5		10	3G9.1	borderline
						dk grey mod hard to hard moncalc ps$_2$ Fol. phyllite - minor banding (laminations) with thin gtzose lamina
						Mod broken
L	81.5	85.5		11	3G10	
						as #9
						mod broken.
L	85.5	87.4		12	3E11	
						dk grey to black mod hard (barely cut by knife) ps$_2$ Fol. non calc. carbonaceous siliceous phyllite mod "lolo flash"
						Contains v. sparse m. grey slightly coarser granular gtzose bands. Has finely ps$_2$ laminated texture but not the "ribbon banded texture" as at 126 m
						intact
L	87.4	93.2		13	4E48	±##6
						finely laminated massive pyritic sulphide - mt as thin stgeaks minor dolo clasts floating in py esp last .6m. Vaguely calcareous with minor calcite in bands (thinly banded) except last .6m = non calc.
						may make 4G8 locally - minor thin 4K bands. transitional to 4K at bottom split originally intact

DDH 81VX01

Cyprus Anvil Mining Corp.
Lithologic Log

Page 6 of

Date: Logged By:

Code	From	To	Recov.	No.	Unit	Description
L	93.2	93.9		14	4L6	weak 24±1 (1009 po)
						pale greenish creme phyllite with a stockwork qtz sphal
						py stockwork vein(?) – last ½ is coarse qtz po bxn
						vein
						intact
L	93.9	96.6		15	SA16	9 minor (4L6 weak 2) 80:20
						dk grey to black, lithoned, noncalc phyllite consists of ~~containing~~
						v. thin interbands of lighter qtzose bands (lithoned) - internally
						finely laminated separated by dk grey ps_2 foliated
						phyllite – minor py dissem $11S_2$
						Upper .3m contains minor thin bands of massive pyrite
						in 4L6 weak – py bands D_2 folded.
						mod broken to locally pokerchippy
L	96.6	121.7		16	SA16	±$ minor (3G3)
						over all very gouged and sheared fault zone consisting
						of several rock types with intervening gouge all
						thickly interbanded – Major Rock types are:
						a) dark grey to black, PS_2 foliated hard locally slightly
						dolomitic (qtzose bands with minor dolo)
						b) dk grey mod soft to mod hard dk grey PS_2 fol
						mod calc phyllite – calcite in thickly lam.
						slightly lighter grey interbands
						c) gouge of a or b
						Minor qtz py vein clasts in along w/ minor 4E0 frags
						S_2 is steeper than normal here – zone cut by numerous

30 – 40 to CA fractures along with many steep fractures
106.4 – 107.9 is relatively intact as is 111.5 – 114.1 rest is gougy.
18.5 m
25.1 m recvd

Fault is IND

now starts the whining!

C.A.M.C. 1981 – E – 3A

DDH 81VX01 (2–8)

Cyprus Anvil Mining Corp.
Lithologic Log

Date: ____ Logged By: ____

Code	From	To	Recov.	No.	Unit	Description
L	121 7	122 7		17	SC3	±4 ±$ (SA164) 80:20
						m. grey green well-foliated speckled calcareous metabasite – some
						dolo + calcite in sections S_2 folia are pale silvery green
						5 cm of bleached off white siliceous phyllite derived
						from SA16
						20 cm rubble in center of unit = thin white siliceous phyllite
						interband
L	122 7	123 1		18	SA164	
						off grey white siliceous altered / bleached version of #19
						intact – gradational lower contact over 20 cm.
	123 1	124 1		19	SA16	
						hard, dk grey to black, noncalc phyllite v. thinly banded text
						v. thinly banded text of sl. blue grey harder qtzose lamine –
						contains minor qtz S= bands similar to 4A bands
						1-3% tot S= strong dolo.
						last 25 cm altered grey version of this (like #18)
						poker chippy to v. broken
	124 1	125 0		20	SC4	±$
						similar to 17 5 cm altn at end
	125 0	156 4		21	SA169	minor
						see #19 for description which is actually a description
						for this
						to 128 m = mod broken local rubbly zones
						128 – EOI = v. broken many rubble + gouge zones – S_2 at acute
						angle to or parallel to CA (core ∡ steepens rapidly
						around 138 m)

C.A.M.C. 1981 – E – 3A

$\frac{21\,m}{28.4\,m}$ = recvd.

DDH 81VX01

Cyprus Anvil Mining Corp.
Lithologic Log

Page 8 of _____

Date: _____ Logged By: _____

Code	From	To	Recov.	No.	Unit	Description
1	10 14	16 20	22 24	26 28	30 34	35
L	156.4	180.4		22	SBG$	±3 [SBO$±3] ??
	23.6					m grey mod soft to soft PS, fol variably calcareous and or dolomitic v. broken phyllite – commonly dolomitic locally 1cm – 5cm bands consist of m x dk m grey mbl. – V. qtz calc veined v. broken v. gouged minor SD4 frags in gouged portions – can't be sure of parent rock type. –
						Core is gouge rubble ± v. broken – center of messy fault zone core as long as 15cm is rare! – Sz at small ∠ to CA
						Parent rock could be like those about 207m
						If this isn't a steep fault zone it sure is a big one! 16m/23.6m recvd.
L	180.4	183.2		23	SD4$	minor ±9 minor
						Tan to brn weath off white – only .6m of core rest is white gouge.
						faulted contacts internal to unit at 20° to CA
						recvy ok
L	183.2	190.7		24	SA1 6	(SBG$) BXA 50:50
						mod hard to hard, m grey to dk grey, variably dolomitic phyllite
						upper portion dominantly v. fractured & sheared SBG with SD4 frags
						lower portion dominantly SBG$
						from 188.5 – 189.1 is coherent fault rock like parts of the ~~the~~ fault.
						Internal foliation in fault rock is 35° to core axis
						Core is intact to 185.3 v. broken to rubbly at 185.3 to 186.8
						186.8 to EOI is mod broken to intact
						Entire interval is BXA & fault rock

C.A.M.C. 1981 – E – 3A

from 128.0m to 190.7 is all a fault zone and its a steep to mod dipping fault

DDH 81VX01 (2–8)

Cyprus Anvil Mining Corp.
Lithologic Log

Date: _____ Logged By: _____

Code	From	To	Recov.	No.	Unit	Description
1	10–14	16–20	22–24	26–28	30–34	35
L	1907	1944		25	SCHS	(SAB4)
						pale flesh fine grained strongly PS_2 fol. (wreath brn tan)
						TOI to 191.6 is thinly to thickly laminated. alteration rims
						of phyllite – SC texture is v. streaky to mottled
						texture reminiscent of Leopard rock.
						last .8 m includes some altered phyllite
						Core is intact
L	1944	2044		26	SA116	
						dk grey hard thinly laminated between dk PS_2 stripes and
						lighter grey bands – minor py mainly in xcutting
						fractures.
						intact – S_2 is contorted local crackle brx.
L	2044	2056		27	SCG	±4
						mgren locally creme, homogenous, non calc chloritic phyllite
						with 15cm of very altered material at upper contact –
						extensively cut by calcite crackle veinlets –
						grades down into grenish grey phyllite of #28
L	2056	2064		28	SB64	[3G4]
						moderately hard greenish grey non calc phyllite with abundant
						calcite filled fine fractures – lower contact gradational
						seems to be alteration zone (assoc with above SC?)
						intact
L	2064	2140		29	SB0	?
						mod hard to hard m. dk grey PS_2 fol, variab. calc, phyllite thinly to
						thickely lam with calc bands – no lithons visible – abundant xcutting calcite

veinlets → crackle brx → tension gashes –
seems to be broken poorly lithoned SB0
intact
S_2 folia are med to med dk steely grey.

DDH 81VX01

Cyprus Anvil Mining Corp.
Lithologic Log

Date: _____ Logged By: _____

Code	From	To	Recov.	No.	Unit	Description
1	10 14	16 20	22 24	26 28	30 34	35
L	214.0	215.8		30	SA3	BXA
						Black Fault rock with qtz & calc clasts in highly foliated black rock flour matrix - internal foliations at 58° to CA and 25/060 to the other.
	215.3	258.8		31	SB0	Calc silicate bio
						moderately soft to hard, generally moderately hard, thinly laminated PS_2 fol med grey to med dk grey calc phyllite - slight brown tinge to grey due to bio in matrix -
						Calc bands have dissem med green actinolite? +
						Patchy bio development due partly to compositional control on dev. of prograde bio but considerable portion due to fracture controlled fading around the abundant qtz calc fracts/veinlets → crackle bxa. Most veinlets at ~10-30° CA.
						Core is mod broken to intact to 230 m
						230-242.8 is mod broken with 1m intervals of v. broken & gouged.
						230.4-230.4 236.5-236.8 and 242.4-242.8 are the largest gouges of the above zone All IND
						242.8-258.8 mod broken with short rubble sections up to ½ m long.
						Why look here for a fault when there's so many others!?

C.A.M.C. 1981 - E - 3A

DDH 81VX01 (2–8)

Cyprus Anvil Mining Corp.
Lithologic Log

Date: ____ Logged By: ____

Is this the SE of the Grum hangingwall?

Code	From	To	Recov.	No.	Unit	Description
1	10–14	16–20	22–24	26–28	30–34	35
L	2588	2594		32	SB0	calc sil bio (SEO) 70:30
						very thinly banded / interbanded SB as above with
						1–5 cm interbands of med fine x/n blue grey mbl.
						SB has both bio & calc sil mbl is clean
						70% phy 30% mbl. , intact
L	2594	2638		33	SB6	calc siliaty minor ± 3
						soft to mod. soft, PS_2 foliated, m grey thickly laminated
						phyllite – wet core has slight green cast – overall it is
						slightly calcareous – calcite is in 1–2 cm bands 11 S_2
						as is grey shade color banding
						Bottom 50 cm contains 1–3 cm thick blue grey
						mbl bands
						These 2 units (32 + 33) remind one of 951'–973'
						of 79-VX-01
L	2638	2823		34	SA16	9 minor
						dk grey to black hard non calc PS_2 fol phyllite med "dolo flash"
						"weath" dull bluish grey on cut surf. Minor coarser 4A type qtz 5= bands
						po > py – contains thin beads of qtz along S_2
						4-SD4$ bands 5 cm thick between 268.3 and 269.0
						core is mod broken to poker chippy & rubbly locally – recvy
						OK, no major faults.
L	2823	2849		35	SD6	(5C$) SA164 [5C] 80:10:10
						mod soft to soft, med green, homogenous locally with
						striped "Lepoard" texture – generally non calc but
						dolomitic where Lepoard textured. – top and bottom
						20 cm are bleached white SA16

intact

DDH 81VX01 (2 — 8)

Cyprus Anvil Mining Corp.
Lithologic Log

Date: _____ Logged By: _____

Code	From	To	Recov.	No.	Unit	Description
1	10 — 14	16 — 20	22 — 24	26 — 28	30 — 34	35
L	2849	2877		36	SA16	
						similar to unit 34 but not much sulphide
L	2878	2891		37	SA164	(SA164) 60:40, intact
						symmetrical intersection .5m of SC with SA164 (stringy)
						for 20 cm at top & bottom, intact
L	2891	3350		38	SA16	± gr. minor
						similar to unit 34 & 36 - ps, foliated locally with qtz/s = bands
						with py
						289.1 to 294.7 intact good planar ps_2
						294.7 to 301.3 intact but S_2 strongly contorted with axial
						plane for kinks at 45° to CA
						301.3 to 301.9 is coherent fault bxa. v. steep foln.
						301.9 to 304.2 intact but S_2 contorted.
						304.2 to 601 S_2 steep in general & heavily contorted - mod
						broken with ½ m long rubble zones
						most significant fault would be the Bxa zone. and
						a lesser one at 320.5 - 321 both steep 10-30°
						to CA.
						recvy for whole unit ok.
	3350	3354		39	SD4$	
						Fractured & brxtd, intact
						base of unit is shear zone at 80° to CA
	3354	3415		40	SA16	
						as above but generally with good planer S_2 - top 40 cm
						is coherent fault rock with SD4$ clasts. - just gotten
						out of the faulted zone (and ready to go into another)

DDH 81VX01 (2–8)

Cyprus Anvil Mining Corp.
Lithologic Log

Date: ____ Logged By: ____

Code	From	To	Recov.	No.	Unit	Description
1	10–14	16–20	22–24	26–28	30–34	35
L	341	3531		41	5D6	±3 minor [SC of fine grained]
						m. green homog. pS_2 foliated mod soft to hard (with
						much mod. hard but short hard zones) - locally calcareous,
						has bluish tint to green color. 5 cm of altered phyllite at
						top and bottom.
						Calcite abundant only where there is minor leopard
						rock texture (last .3m) otherwise non calc
						Same as metabasites at end of 79VX-01
						intact
L	3531	3542		42		
						med dk gey, noncalc, mod soft to mod hard, pS_2 fol. phyllite
						Bottom ½ of interval is slightly calc (calc clasts but matrix
						noncalc) qtz clasts also) foliated fault bxa - Bxa has
						strung out clasts of metab along foln at 10° to CA
						mod broken.
L	3542	3577		43	5D6	
						possible epidote? bluish green color locally yellowish green
						abundant calcite in fractures - similar to #41
						core mainly intact
L	3577	3605		44	5A16	4±B10 (5D6) 80:20
						hard thickly laminated pale greenish white with
						some pale purplish pink - highly altered phyllite.
						Texture & color like 5A164 cphole except where
						brown Lio present minor metabasite in center of
						unit - S_2 at acute ∡ to core axis
						mod broken to very broken

DDH 81VX01 (2–8)

Cyprus Anvil Mining Corp.
Lithologic Log

Page 13 of ____

Date: ____ Logged By: ____

Code	From	To	Recov.	No.	Unit	Description
1	10–14	16–20	22–24	26–28	30–34	35
L	3605	3634		45	SA148	bio minor (SC3 minor) 70:30
						Exactly like last unit of 79VX-01 except goes up & down core instead of across.
						Non calc. Dark green thickly laminated siliceous (hard to mod
						hard) phyllite - 1cm lams alternately dk green (chl rich)
						& dk purplish grey (bio bearing) interbanded with homog
						slightly calc m green very foliated tan weath in
						streaks metabasite.
						1st rock probably a metasediment ??? ∴ SA148 Bio minor
						70:30 metased : metabasite
						intact to mod broken
L	3634	3647		46	SA164	(SA6BXA) 50:50
						ToI to 364.0 is same light, coloured siliceous, altered phyllite as above
						Remainder is highly sheared dk grey non calc, strongly
						foliated flaser textured mod soft phyllite
						mod bkn.
L	3647	3862		47	SD6	±3±$ [SC±3±$] (SA164 bio) 90:10
						dominantly metabasite - med to med dk green homogenous
						locally with speckled to foliated lepoard rock texture, locally
						calc or dolomitic -
						Locally thinly interleaved with altered siliceous
						phyllite (SA164) less than 30 cm thick - for much
						of unit S_2 is down core axis - local sheared & fault
						Bxtd zones.
						Bulk of alt phy are at 369.8 - 374 and 381.2 - 382.2
						mod broken to intact to 367.5
						367.5 to 368.1 = v. broken

368.1 - 369.4 = intact

369.4 - 374 = v. broken, reground core. 1.5m/4.5m recvd

374 - 382.2 = intact locally broken

382.2 - 382.9 = incip gouge as usual for lepoard rock

382.9 - EOI = intact

C.A.M.C. 1981 - E - 3A

DDH 81VX01 (2–8)

Cyprus Anvil Mining Corp.
Lithologic Log

Date: Logged By:

Code	From	To	Recov.	No.	Unit	Description
L	386 2	394 6		48	SDG	±3±S[SC](SA164B10) 60:40
						interleaved (by faulting?) altered phyllite (purplish brn color) & metabasite.
						This is edge of above metab. S_2 (or shear foln) is essentially
						down core to 391.2 –
						391.2 – EOI dominantly metab with S_2 at 70–80° to
						core axis.
L	394 6	424 4		49	SA16	BXA
						Clasts of SC4 & fuch & qtz and carbonate in black
						generally sheared "rock flour" matrix – Distinctive
						augen/flaser texture. – foln where sheared/foliated
						is ∥ to CA to 20° to CA – xcutting fracts at
						30/180 wrt above. Classic SA* of Dy.
						Some intervals gouged some coherent – no s=frags seen.
						Short zone of isotropic bxa at 410.5 – 411, 412, 421 m.
						Short sections of hard cherty textured black tactylite
						at 420 m and at 412 seems to be assoc with
						the more isotropic fault Bxa. –
L	424 4	431 1		50	SAG	±1
						dk gey to black, mod soft to locally hard. noncalc ps_2 laminated
						phyllite
						at 425.5 has several scm thick SD4 interbands
						local softness may be related to faults nearby as this
						looks like typical SA16
						core intact to 430.4
						430.4 = 50 cm sand., cave noted by drillers

430.4 – 431.1 = intact

DDH 81.V.X.01 (2 — 8)

Cyprus Anvil Mining Corp.
Lithologic Log

Date: _____ Logged By: _____

Code	From	To	Recov.	No.	Unit	Description
	10 — 14	16 — 20	22 — 24	26 — 28	30 — 34	35
L	431 1	432 0		S1	SCS	±4
						Fine med grained speckled greenish grey to locally tan weath (creme fresh) metabasite - well foliated.
L	432 0	440 4		S2	SA	BXA (360)(SD4) 70:30:tr
						blk to grey fault BXa - coherent fault rock - clasts of qtz carbonate ± alt metab. in grey to black soft to v. hard rock flour matrix - interleaved with normal looking (planar S_2 etc) SD and 360 (med grey non calc med soft pS_2 fol phyllite)
						70% fault BXA
						core mainly intact-
L	440 4	441 3		S3	SCG	
						m olive green, mod. soft, homogeneous strongly PS_2 fol. chl. phy, non calc - locally slightly speckled. S_2 foln runs down core axis
						intact
L	441 3	443 2		S4	360	
						m grey, non calc soft pS_2 foliated phyllite. S_2 foliation contorted & kinked with mod steep sheet dip
						major fault at 395 to 441 & seems to be at 10-20° to CA - cant be sure we are out of it but core looks healthier at end so may be thru it.
						By comparision the faults up the hole look less major

C.A.M.C. 1981 - E - 3A

DDH 8.1.V.X.0.1. (2 – 8)

Cyprus Anvil Mining Corp.

Structural Log

Page 16 of ____

Date: July 29/84 Logged By: LCP/GAS

Code (1)	From (10–14)	To (16–20)	Feature (22–24)	Sym (26)	S_0 Dip Direct. (28–32)	S_1 Dip Direct. (34–38)	S_2 Dip Direct (40–44)	Description
S		478	PS2				75	
S		518	PS2				68	
S		575	PS2				77	70°–50° on S= bands in Ore. also.
S		640	PS2				66	
S		690	PS2				72	
S		651	PS2				79	weak CS_N 42/180
S		770	PS2				65	CS_N 54/260
S		847	PS2				62	CS_N 53/210
$								Fault at 872m at top of S= at 40°/270
S		873	PS2				65	CS_N 52/290
S		910	PS2	?			70	S= banding = PS_1?
S		948	CS2	5			64	good sym. 57/180 = CS_N
S		991	PS2				40	
S		1005	PS2				32	74/180 consistent x cutting fract set.
S		1076	PS2				45	50/180 = CS_N
S		1140	PS2				44	
S		1168	CS2				36	→ PS_2
S		1248	PS2				33	
S		1279	CS2	2			38	→ PS_2 CS_N seems shallow but too hard to meas.
S		1261	PS2				37	→ CS_2 CS_N 85/180
S		1318	PS2				45	CS_N 78/180
S		1385	PS2				20	CS_N 88/000
S		1472	PS2				10	CS_N 85/000
S		1525	PS2				30	CS_N 60/180
S		1620	PS2				25	CS_N 70/000
S		1658	PS2				54	→ CS_2 short rock sections between gouges & rubble
S		1734	PS2				37	
S		1846	PS2				47	
S		190	PS2				50	
S		1954	PS2				00	axpl of kink fold in PS_2 @ 50 to CA ≡
								50/000 wrt S_2 on shallow limb
								where S_2 = 85°
S		2003	PS2				50	axpl of fold 85/000 related
								to small flt at ~10/000







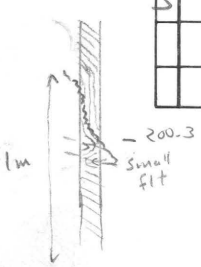

NB: 195 – 201m lots of steep S_2 ~50% of interval and related crumpling

DDH 81VX01 (2–8)

Cyprus Anvil Mining Corp.
Structural Log

Page 17 of _____

Date: _____ Logged By: _____

Code (1)	From (10–14)	To (16–20)	Feature (22–24)	Sym (26)	S_0 Dip Direct. (28–32)	S_1 Dip Direct. (34–38)	S_2 Dip Direct (40–44)	Description
		202 5	PSR				87	
		207 3	PSR				55	network of fract veinlets at 00 to
								±30° to CA
		213 6	PSR				45	
		217 6	PSR				32	
		214 5						may be S & C bands in fault giving
								sense of shear? see margin
								but may be bullshit! cause dont know what I'm seeing
S		221	PSR				35	
S		227	PSR				45	
S		232 6	PSR				45	also has late steep raking slicks
S		235 3	PSR				36	
S		239	PSR				39	
S		245	PSR				58	
S		250 4	PSR				55	
S		255 0	PSR				58	
S		260 4	PSR				43	
S		263	PSR				67	
S		269 2	PSR				50	
S		275 4	PSR				74	
S		277 9	PSR				56	good CS_N = 36/310
S		281	PSR				50	good CS_N = 27/320
S		283 6	PSR				52	
S		289 4	PSR				52	
S		290 7	PSR				44	CS_N 21/020
S		293 5	PSR				52	→ CS_2
S		296 3	PSR				74	kink folds axpl 45/000 sub horiz axis
S		300 5	PSR				01	53/000 axpl of crumples "
S		303 5						small fault zone that may
								have S & C type bands ∴
								may be implying reverse
								displ.
S		307 6	PSR				01	kink/crumple axpl = 45/000 sub horiz axis
S		313 0	PSR				01	" = 40/000 "
S		314 9	PSR				01	35/000 "

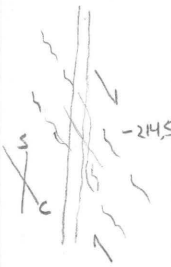



DDH 81VX01 (2–8) **Cyprus Anvil Mining Corp.** Page 18 of _____

Structural Log Date: _____ Logged By: _____

Code	From	To	Feature	Sym	S_0 Dip Direct.	S_1 Dip Direct.	S_2 Dip Direct	Description
1	10–14	16–20	22–24	26	28–32	34–38	40–44	
S		3240	PS2				01	axpl of crumples/kinks (conjugate)
								30/180 & 48/000 subhoriz axes
S		3266	PS2				20	fracture 25/180 → fract clev.
								assoc with crumpling of S_2
								sub horiz axes
S		3310	PS2				01	
S		33H8	PS2				15	axpl to crumples 32/000 sub horiz axes
S		3403	PS2				49	
S		3416	PS2				52	} out of zone of crumpled S_2
S		3516	PS2				5P	
S		3556	PS2				65	
S		3598	PS2				17	
S		3666	PS2				40	
S		3716	PS2				35	
S	3760	3809	PS2	?			01	PS_2 down core axis
S		3822	PS2	?			21	50/000 = xfract set (see L margin)
S		3885	PS2	?			24	45/330 = "
#		39H8						flaser foln. = 32° to CA
								70/000 wit above is fract set.
#		3996						flaser foln 10° to CA xfract at
								57/180
#		4024						flaser foln 15° to CA xfract at 40/000
#		4134						" 10° to CA 2 xfracts at
								53/000 other at 65/180
#		4221						flaser foln ≈01° to CA xfract at 65/000
S		4265	AS2				58	fract clev/crumple axpl=31/060
S		4308	PS2				64	" =42/320
#		4326						flaser foln at 67° to CA xfract=34/000
S		4371	PS2				60	
#		4410						flaser foln at 00 to CA xfract = 45/000
S		4428	PS2				58	CS_N + crumple axpl = 74/030

PS_2 could be flaser fabric

See this a fair bit

C.A.M.C. 1981 – E – 4

CYPRUS ANVIL MINING CORPORATION

DIAMOND DRILL CORE LOG

Hole Number: 81-VX-01

Fabric Orientation Diagram:

Project: _____

Location: _____

Claim: _____

Terr. Plane Co-ords.: 6903179.0 ~~6902676~~.9 N

593915.0 E

Grid Co-ords.: _____

All symmetry determinations looking _____ with _____ dipping _____ with dip azimuth _____.

Elevation: 1146.2

Total Depth: 443.2 m

Purpose: _____

Logged by: PN

Date(s) Logged: APRIL 5,7,8,9 1981

Drilling Contractor: ARCTIC D.E.

Core:	Size	From	To	Collar Cased and Capped:
	NQ		EOH	

Started: _____ Completed: _____

DDH 81-VX01 Cyprus Anvil Mining Corp. Page 3 of 10

Lithologic [illegible] Logged By [illegible]

Code	From	To	Unit	Code	Description
L	[illegible]	462	1		[illegible]
	[illegible]	473	[illegible]	4L0	<1% py
L	473	518	3	5B[illegible]	[illegible] alternating narrow (<1cm wide) qtz bands; gouge 50.6-50.7m; graphitic (5A6) [illegible] 51.8m;
L	[illegible]	529	4	4A[illegible]	[illegible] towards bottom of unit; [illegible] 52.6m; 4AE w/ 15% PbZn 52.6-52.9m; [illegible] 51.8-52.2m;
L	529	536	5	4CD	[illegible] interbanded w/ [illegible] PbZn; 40% py;
L	536	569	6	4C8	[illegible] py, [illegible] 70% py; 10% mt; [4E83] [illegible] calc. (minor barite);
L	569	695	7	5A6	3% py assoc. w/ qtz bands; bxia w/ graph. fragments [illegible] sulphide (mainly py, 90%) groundmass 58.2-58.7m; gouge 58.7-59.8m; PbZn bands <1 to 2cm. wide 60.2 [illegible] m (10% PbZn); minor 5B26; [illegible] 67.2-67.4m; gouge 69.3- [illegible]
L	695	80[illegible]	[illegible]	5B[illegible]	[illegible] 75.2-75.3, 77.1-77.2m; [illegible] <1 to 4cm. [illegible]
L	80[illegible]	816	9	5A6	2% py stringers
L	816	855	10	5B6	gouge 81.8-[illegible]m; 1% Po blebs assoc. w/ [illegible] (<0.5cm) qtz bands;
L	855	874	11	[illegible]	[illegible] known gash fillings; [illegible]
L	874	[illegible]	12	4[illegible]4	[illegible] 60% py [illegible] 15% mt; 10% PbZn; banded; [illegible]
	[illegible]	[illegible]	13	[illegible]	[illegible] bxiated bands [illegible] 10% mt; 4L5D band [illegible] 93.
L	[illegible]	940	14	4L17	[illegible] gers; massive po w/ qtz [illegible]
L	[illegible]	1035	15	[illegible]	[illegible] 96.6-96.9m;

DDH _____ Cyprus Anvil Mining Corp. Page 4 of 10

Lithologic Log Logged By: _____

Code	From	To	Unit	Code	Description
1	10 14	16 20	22 23	25 27	
					very slightly calc; gouge 102.7 - 103.0 m;
L	1035	1048	16	5B.0	gouge
L	1053	1061	17	5A.0	gouge & bxia; 20% bxia; 80% gouge
L	1061	1080	18	5A.0	numerous calc. t.g. fillings w/ py stringers (3%) 106.4 - 107.0 m;
L	1080	1100	19	5B.6	50% gouge; calc; 5X0 bxia w/ calc. t. py; graphitic gr. mass 109.0 - 109.1 m
L	1100	1173	20	5A.0	20% bx. calc
L	1173	1184	21	5B.6	
L	1184	1217	22	5A.0	
L	1217	1232	23	5D.0	slightly altered; bleached but w/ few dk. green blebs; highly calc; 4L1 122.9 - 123.2 m;
L	1232	1243	24	5A.6	
L	1243	1251	25	5D.0	bleached; highly calc; banded;
L	1251	1271	26	4.A0	3% po;
L	1271	1490	27	5A.9	3% py, massive & 4% texture locally; 40% bx core, 2% gouge (scattered);
L	1490	1518	28	5A.6	gouge
L	1518	1565	29	5A.6	almost all texture; 2% py; 50% gouge
L	1565	1623	30	5B.0	2% po blebs; numerous calc. t.g. fillings; bx. core 156.8 - 159.4 m;
L	1623	1630	31	5A.6	
L	1620	1662	32	5A.0	163.4 - 163.6 m;
L	1662	1694	33	5A.0	
L	1694	1787	34	5B.0	15% 5A0 bands, 25% gouge + bx. core + numerous calc. t.g. fillings;
L	1787	1804			
L	1804	1831			
L	1831	1907		5A.0	pale 18 SM; minor 4D0 veinlets (~50% calcite) 0.7 m. spacing; numerous calc. fillings slightly bx'ed texture py bands 189.3 - 189.4 m;

DDH 81-VX01 (2 8)

Cyprus Anvil Mining Corp.

Lithologic Log

Logged By: PN

Code	From	To	Unit	Code	Description
1	10 14	16 20	22 23	25 27	
L	1967	1944	38	5D4	slightly calcareous; bleached w/ few elongated gr. chl. blebs (H S2) remaining; 090 1940 - 194.3m;
L	1944	2044	39	5A09	very slightly calc [5A6]; 2% py as stringers [illegible] t.g. fillings; silica [illegible] bands EOI; qtz. t.g. fillings; [illegible] a 4A texture); banded;
L	2944	2064	[illegible]	[illegible]	[illegible] produces a lt. coloured [illegible] 4L; high [illegible] numerous [illegible]
L	2064	2140	41	5B2	[illegible] numerous calc. t.g. fillings;
L	2140	2152	42	5A0	[illegible] calcareous;
L	2152	2642	43	5B0	090 22[illegible] 220.8, 220.9 - 221.1m; [illegible] 1% po blebs. assoc. w/ qtz veins + bands; gouge 230.4-230.7m; [illegible] a chl. incr. ∴ a [illegible] of unit 3); [illegible] 242.4 - 242.8m; [illegible] thick calc. bands [illegible] 258.8 - 259.4m.
L	2643	2709	44	5A0	[illegible] 5-8cm wide @ [illegible] 2 cm spacing [illegible] 3m; 2% py stringers + blebs slightly calcareous
L	27[illegible]	2734	45	4A0	[illegible] PbZn; 2% py blebs assoc. w/ qtz [illegible]
L	27[illegible]	2823	[illegible]	5A6	w/ 2% py stringers, non calc; 1% po blebs [illegible] w/ qtz-bands (w/ a 4A texture);
L	2823	2830	47	5F4	slightly altered chl. phyllite; sericitic [illegible] calcareous [illegible] fillings;
L	2830	2850	48	5B0	calcareous;
L	2850	288[illegible]	49	5A9	[illegible] blebs assoc. w/ qtz band

DDH 21-VX-01 (2 / 8)

Cyprus Anvil Mining Corp.

Lithologic Log

Logged By: RN

Core	From	To	Unit	Code	Description
	10 14	16 20	22 23	25 27	
L	288.0	289.1	5,0	5,D,H	[illegible] 288.9 - 289.1 m;
L	289.1	341.1	75,1	5,A,9	vuggy [illegible]; 3% py stringers + clots + blebs + qtz bands (almost 4A texture); [illegible] 49); buggy up to 303.8 m; 090 306.2 - 309.3 m; 309.9 - 301.5 m; 5A* texture?; 10% gouge; brecciated 304 [illegible] - 335.5 m;
L	341.7	343.8	52	3,B,3	bleached (slightly); 3% py blebs; w/ fewer chl bands; not quite 4L; [illegible]; [5D0];
L	345.0	350.0	53	3,B,10	Calc. bands [illegible] 3 cm wide w/ up to 0.5 m spacing; 3% py blebs;
L	352.0	354.3	54	5,A,6	bxia; silicic [illegible] 504 frags. in graph. matrix; 353.5 - 354.3 m slightly calc; 3B0 as unit 53; 353.7 - 353.8 m;
L	356.3	357.8	55	3,B,3	Calcareous? minimum calc. to qtz fillings; bxia 354.3 - 354.4 m; 1-2% py blebs; dk green;
L	357.8	361.0	56	3,B,0	slightly altered w/ sericite bands; qtz content [illegible] towards [illegible] of interval;
L	361.0	362.6	57	3,B,3	as unit 53;
L	362.6	364.0	58	3,B,0	as unit 56; 2% py blebs; non-siliceous;
L	364.0	364.8	59	5,A,9	4% py blebs assoc. w/ qtz bands + py stringers; almost a 4A texture; non-calc;
L	364.8	367.9	510	3,B,3	slightly altered 3B as sterbands, numerous calc. to qtz fillings, somewhat tuffaceous looking; 369 367.8 - 367.9 m;
L	367.9	375.4	61	3,C,3	w/ calc. blebs, 3% py blebs;
L	375.4	377.0	62	3,B,0	< 1% py stringers; bxia 375.8 - 376.3; 376.3 - [illegible] m; minimum calc to qtz fillings;
L	377.0	378.9	63	3,C,3	
L	378.9	382.1	64	3,E,8	[illegible] sterbands; 4% py blebs;
L	382.1	383.0	65	3,B,4	sericitic-altered chl. phyllite, calc w/ py blebs
L	383.0	385.0	66	3,B,0	
L	385.4	386.3	67	3,B,4	as unit 65;
L	386.2	389.4	68	3,D,4	[illegible] calc; 5% py; siliceous w/ purple bt bands;

DDH [illegible]

Cyprus Anvil Mining Corp.

Lithologic Log

Logged By: PN

Code	From	To	Unit	Code	Description
L	3894	3950	69	3B4	slightly bl[illegible] mariposite; <2%
					py blebs, [illegible]; graphitic interbands
					394.6 - 395.[illegible]m;
L	3950	4027	70	5A6	bxia as unit 54;
L	4027	4105	71	5A6	[illegible]
L	4105	4243	72	5A6	[illegible] 10% gouge;
L	4243	4311	73	5A6	[3F0] [illegible] py stringers;
L	4311	4321	74	3C4	bleached w/ [illegible], mariposite; calc. blebs;
					lt. green
L	4321	4341	75	5A6	bxia [illegible] 70
L	4341	4352	76	4L0	[3B4? [illegible] non-calc; bxia 434.5 -
					435.8m w/ qtz lenses in 4L groundmass;
L	4352	4390	77	3G9	bxia 435.2 - 435.8m; non-calc; OQO
					436.6 - 437.0m; bxia 438.5 - 439.0
					w/ large (<5 cm) angular qtz frags in
					phyllite groundmass;
L	4390	4414	78	3B4	slightly altered; lt green colour;
					numn 5A6 interbands (10% 5A);
					bxia 439.3 - 440.8m; numerous calc. t.g.
					[illegible]
L	4414	4432	79	3G9	as unit 77; 1% py;
		EOH			

DDH 81-VX-01 (2 / 8)

Cyprus Anvil Mining Corp.
Structural Log

Logged By: PN

Code	From	To	Feature	Sym	S_1 Dip Direct.	S_2 Dip Direct.	Description
1	10 14	16 20	22 24	26	28 32	34 38	
S		476	CS2			74 230	
S		532	CS2			56 230	
S		607	CS2			79 230	
S		680	CS2			70 230	
S		767	CS2			71 230	
S		857	CS2			64 230	
S		961	CS2			58 230	
S		1031	CS2			37 230	
S		1084	CS2			46 230	
S		1142	CS2			45 230	
S		1234	CS2			45 230	
S		1298	CS2			36 230	
S		1401	CS2			43 230	
S		1450	CS2			35 230	
S		1613	CS2			11 230	
S		1661	CS2			51 230	
S		1731	CS2			58 230	
S		1834	CS2			37 230	
S		1907	CS2			37 230	
S		1962	CS2			30 230	
S		2011	CS2			70 230	
S		2066	CS2			66 230	
S		2134	CS2			51 230	
S		2183	CS2			30 230	
S		2238	CS2			49 230	
S		2299	CS2			43 230	
S		2360	CS2			40 230	
S		2392	CS2			37 230	
S		2449	CS2			61 230	
S		2505	CS2			42 230	
S		2572	CS2			62 230	
S		2628	CS2			64 230	
S		2705	CS2			65 230	
S		2754	CS2			75 230	
S		2811	CS2			46 230	
S		2863	CS2			44 230	

DDH 81-VXD1 (2 / 8)

Cyprus Anvil Mining Corp.
Structural Log

Logged By: PN

Code	From	To	Feature	Sym	S_1 Dip Direct.	S_2 Dip Direct.	Description
1	10 14	16 20	22 24	26	28 32	34 38	
S		2816.3	CS2			20 230	
S		2895	CS2			58 230	
S		2943	CS2			58 230	
S		3010.7	CS2			37 230	
S		3015.0	CS2			14 230	
S		3110.8	CS2			36 230	
S		3171	CS2			24 230	
S		3222.3	CS2			49 230	
S		3277.7	CS2			33 230	
S		3330	CS2			58 230	
S		3372	CS2			39 230	
S		3408	CS2			47 230	
S		3460	CS2			60 230	
S		3518	CS2			50 230	
S		3568	CS2			60 230	
S		3621	CS2			27 230	
S		3643	CS2			39 230	
S		3670	CS2			46 230	
S		3712	CS2			19 230	
S		3771	CS2			51 230	
S		3810.0	CS2			39 230	
S		3847	CS2			26 230	
S		3990	CS2			37 230	
S		4262	CS2			61 230	
S		4326	CS2			41 230	
S		4380	CS2			58 230	
S		4423.1	CS2			49 230	
		EOH					

DDH 81-VX01 (2 / 8)

Cyprus Anvil Mining Corp.
Geochemical Log (Sampler's Copy)

Logged By: PN

Sampled By:

Code	From	To	Sample No.	Description		
1	10 14	16 20	22 27	LENGTH	RECOVERY	UNIT
P	518	529	19611	1.1	1.1	4A4
P	529	536	19612	0.7	0.7	4CD
P	536	552	19613	1.6	1.2	4C8
P	552	569	19614	1.7	1.6	4C8
P	874	890	19615	1.6	1.5	4G48
P	890	906	19616	1.6	1.7	4G48
P	906	921	19617	1.5	1.5	4G48
P	921	933	19618	1.2	1.1	4K38

CYPRUS ANVIL MINING CORPORATION

DIAMOND DRILL CORE LOG

Hole Number: EA 71-213

Project: _____

Location: _____

Claim: _____

Terr. Plane Co-ords.: _____ N

_____ E

Grid Co-ords.: _____

_____

Elevation: _____

Fabric Orientation Diagram:

All symmetry determinations looking

_____ with _____ dipping

_____ with dip azimuth _____.

Total Depth: 505 feet =

Purpose: _____

Logged by: _____ Date(s) Logged: _____

Drilling Contractor: _____ Core: Size From To Collar Cased and Capped: ____

_____ _____ _____

_____ _____ _____

_____ _____ _____

Started: _____ Completed: _____

Cyprus Anvil Mining Corp. Page 2 of _____

DDH EA71213 (2–8)

Diamond Drill Core Log Date: _____ Logged By: _____

Code	Drillhole	Elevation	Northing	Easting	Units (feet/metres)	R.F.E.	
1	2 8	10 16	17 24	25 32	34 39	41 42	
T	EA71213						

Code	Drillhole	Depth	Zenith Angle	True Azimuth	Comments
1	2 8	10 14	22 26	28 32	34 56
R	EA71213		•	•	AT COLLAR
			•	•	
			•	•	
			•	•

DDH 71-213 (2–8)

FEET

Cyprus Anvil Mining Corp.
Lithologic Log

Date: ____ Logged By: ____

Code	From	To	Recov.	No.	Unit	Description
1	10–14	16–20	22–24	26–28	30–34	35
L	00	610		1	#	sand, gravel, old boots & coke bottles
L	610	1000		2	SBO	
						med grey, calcareous soft phyllite with well developed
						qtz calc sstn. bands with excellent lithon
						texture - bands up to 3 cm thick -
						top 1' is rubbly - minor rubble @ 65.5'
						otherwise to 84' ~~[illegible]~~, mod broken from 84-EOI, recvy ok
						~~[illegible]~~ 88-EOI have ~5% 10cm 10Q# foliaform
						veins (verminform) of 1982 useage)
						mainly pyrite porphs, some po replacing py
						porphs
L	1000	1040		3	SB26	med dark grey, non calc, soft phyllite with thin
						quartzose sst. lamine - calcite restricted to
						qtz calc veins - pyrite porphs
						unit intact to 103, 103-104 is pokerchippy, recvy ok
L	1040	157		4	SBO	
						med grey mod soft to soft calc phy excellent microlith
						with qtz sstn. bands -
						@153 have ½' of dolo in liths rather than calcite
						calc bands weath pale tan. dolo more orangish
						TOI-120 pokerchippy but recvy ok
						120-130 m. broken recvy ok
						130-133 v. broken to rubbly
						133-135 intact

135-139.5 upper part coherent dk grey flt bxa with white 10Q as augen in phyllitic matrix - lower half broken to rubbly with ~70% recvy

140-150 v. broken to lkly rubbly

150-157 m broken to intact

DDH 71-213 (2 … 8)

Cyprus Anvil Mining Corp.
Lithologic Log

Page 4 of ____

Date: ____ Logged By: ____

Code	From	To	Recov.	No.	Unit	Description
1	10–14	16–20	22–24	26–28	30–34	35
L	157	160		5	SDO	(SB6) 70:30
						m. olive green homogenous calc chl. phyllite minor qtz calc
						veining - center of unit is thin non calc m. grey
						phyllite with no sstn bands, ps, foliated
						interval m. broken to intact
L	160	193		6	SBO	± 2
						med grey calc-phy, mod soft, calc qtz sst lamine
						from not present to at least 50% locally, last
						4' have increasing carbon content so rx go
						from med grey to dark grey.
						py & po porphs are present.
						TOT is short gorge & rubble zone, IND
						otherwise unit is m broken to intact, recvy OK
L	193	201		7	SBO	± $ ± 2 minor
						m grey to m dk grey calc phy weath to rusty orange
						brown related to dolomite in qtz $CO_3^=$ sst bands,
						calcite still present.
						can see py porphs
						unit is m. broken to intact
						197-198 is pokerchippy
L	201	258		8	SBO	± $ (SDO) minor
						m grey calc phy w. well developed calc qtz lamine good
						mica liths, locally w. dolo sections <10cm thick weath

brownish tan.
10cm SDO band @240'

C.A.M.C. 1981 - E - 3A

DDH 71-213

Cyprus Anvil Mining Corp.
Lithologic Log

Date: _____ Logged By: _____

Code	From	To	Recov.	No.	Unit	Description
						intact except 245-247 is broken & rubbly
						py porphs & po porphs both.
L	2580	2650		9	SDO	(SBO) minor
						homog m. olive green, v. sparse qtz calc bands
						1 pyritic porph. - ½ of interval with S_2 down
						core axis ⇒ late fold
						intact.
L	2650	3000		10	SBO	
						m grey, calc phyllite locally well dev. qtz calc sst
						micro lithons/laths - intervals up to 2' long are
						PS_2 foliated.
						py & po porphs, py with po on margins & fractures of porphs
						intact
L	3000	3020		11	SDO	
						m. olive green - m. soft - more phyllitic look than normal
						py & po porphs.
						intact
L	3020	3110		12	SBO	(SDO) v. minor
						m. grey calc phy poorly develop lithons with qtz calc
						ss'n bands, SD as 5cm S_2 foliform band in middle
						of unit

Po > py in porphs
intact

DDH 71-213

Cyprus Anvil Mining Corp.
Lithologic Log

Date: _____ Logged By: _____

Code	From	To	Recov.	No.	Unit	Description
	10 14	16 20	22 24	26 28	30 34	35
L	3110	3145		13	SDQ	
						po porphs, intact
L	3145	3240		14	SBQ	(SB20) 80:20
						SB20 is gradual 2' darkening of calc phyllite at
						bottom of interval - upper part m. grey.
						py po-phs and some po porphs.
						sst bands present but not forming excellent mesolithons.
						Core is intact
L	3240	3330		15	SBQ	±8 (SDQ) 70:30
						m. grey phyllite interlayered w olive green chl phyllite.
						chl phy as 30cm to 5cm thick intervals.
						Locally phyllite has greenish tinge on cut surf but
						still has grey S_2 folia.
						Py porphs
						core is intact
L	3330	3480		16	SD6	(SB6) 70:30
						interbanded m. grey to m. dk grey phy + med olive green chl
						phyllite with SD up to 50 cm thick -
						SB6 lacks sst lamina + is pS_2 foliated
						core intact to m. broken.
L	3480	3525		17	SD6	
						soft m. olive green chl phy - qtz bands + veinlets
						intact

DDH 71-213 (2–8)

Cyprus Anvil Mining Corp.
Lithologic Log

Date: ____ Logged By: ____

Code (1)	From (10–14)	To (16–20)	Recov. (22–24)	No. (26–28)	Unit (30–34)	Description (35)
L	3525	3570		18	SB6	(SD6) 70:30
						SB lacks qtz calc sst lamine – both green & grey phy are
						non calc, 1-SD band in middle
						intact
L	3570	3625		19	SB0	±2 (SD0)
						SB has qtz calc sst lamine – locally m. dk grey –
						SD as bands 10-50 cm thick
						intact
L	3625	4190		20	SB0	±2 ±8 in top ½
						py porphs being replaced by po also po porphs.
						calc qtz sst lamine weath to pale tan.
						±2 mainly in lower part of interval where phyllite
						gradually darkens
						intact to 390 recvy ok
						390-392.5 is coherent flt. Bxa upper part is carbonaceous
						with clasts of qtz & phyllite in phyllitic
						matrix – related fractures ≈ pS_2 other at 55/000, carb. shear plane (=foln) @ 55°
						392.5-419 is intact
						±8 = greenish color down to ~387'
	4190	4655		21	SB2$	±0
						m dark grey to dk grey, m. hard phyllite with qtzose
						bands having dolomite but calcite is CO_3 for short
						intervals – carbonate weath dark rusty brown.

DDH 21-213

Cyprus Anvil Mining Corp.
Lithologic Log

Date: _____ Logged By: _____

Code	From	To	Recov.	No.	Unit	Description
	10 14	16 20	22 24	26 28	30 34	35
						unit contains fault bxa & gouge - dolomite may be related to it.
						to 424.5 is intact
						424.5-425 is fault Bxa - late vein type Bxa upper contact 11 S_2
						425-428 = intact to broken
						428-436 is gouge with ~40% recovery
						436-445 is broken to rubbly - recvy ok
						445-EOI poker chippy to broken but recvy ok
L	4165	4172		22	SB26	$ FAULT BXA (SC$) minor
						Looks similar to fle fault rock - minor SC fragments in phyllitic matrix
						upper CNT = IND lower 11 S_2
						upper 3' small pebbles all thats left - 10% recvy
						rest of unit good recvy intact
L	4172	5050		23	SDO	±6 (SB80 ±6) 80:20
						gradations between homogenous chl phyllite and chl phy with well developed calc gtz lithons and greenish grey phyllite. Patchily non calcareous in minor amounts. Intact except last 5' which is fault Bxa and gouge upper contact IND - both ends in fault.
						505 = EOH

C.A.M.C. 1981 - E - 3A

FEET DDH 71-213 (2 8)

Cyprus Anvil Mining Corp.
Structural Log

Date: _____ Logged By: _____

Code	From	To	Feature	Sym	S_0 Dip Direct.	S_1 Dip Direct.	S_2 Dip Direct	Description
1	10 14	16 20	22 24	26	28 32	34 38	40 44	
S		1612 0	CIS12				716	
S		1810 0	CIS12				818	
S		1913 0	CIS12				715	
S		1/1/11 0	CIS12	D			715	
$		1/1211 0				210 0100		Late crenulation cluge
								Z-asymmetry looking NW
S		1/1216	CIS12				815	
$		1/1316 0					615	Shear plane
S		1/1419 0	PIS12				716	
S		1/1710 0	CIS12	D			710	
S		1/1811 0	CIS12				810	
S		12010 0	CIS12	D			710	
S		12114 0	CIS12				718	
S		12219 0	CIS12				615	
S		12413 0	CIS12				715	½ down dip
S		12615 0	PIS12				715	S_1 // CS_2 / PS_2 ?
S		12719 0	CIS12	D			715	
S		12918 0	CIS12				718	
S		13110 0	CIS12				810	
S		13217 0	CIS12				717	
S		13417 0	CIS12				716	→ PS2 locally
S		13711 0	CIS12				910	
S		13816 0	CIS12				66	
$		14014 0	CIS12				515	cut by faults
S		14014 0	CIS12				714	
S		14119 0	CIS12				715	
S		14510 0	CIS12				715	
S		14615 0	PIS12				715	
S		14719 0	PIS12				810	
S		14818 0	CIS12				812	
S		14915 0	CIS12				715	

Feet

FAULT

DDH 71-213 (2 8)

Cyprus Anvil Mining Corp.

Structural Log

Page 10 of

Date: Aug 9/84 Logged By: LCP

Code (1)	From (10–14)	To (16–20)	Feature (22–24)	Sym (26)	REC UPPER S_0 Dip (28–32)	Direct.	INT S_1 Dip (34–38)	Direct.	LOWER S_2 Dip (40–44)	Direct	Description
F	610	620	R								rubbly
F		655	1R								minor rubble
F	620	1000	2B								mod. brken
F	1030	1200	T								poker chippy – recov OK
F	1200	1300	2B								mod. brken
F	1300	1330	3BR								v. brkn to rubbly
F	1350	1395	XRB	7							upper part coherent fault
											bxa, lower ½ brkn
											to rubbly w/ 70% recov.
F	1400	1500	3BR								v. brkn to locally rubbly
F	1500	1600	1B								mod. brken to intact
F		1600	GR								short gouge (IND) & rubble zone
F	1600	2010	1B								mod. brken to intact
F	1970	1980	T								poker chippy
F	2450	2470	BR								brken & rubbly
F	3330	3480	1B								intact to mod. brken
F	3900	3925	3X								coherent fault bxia
F	4245	4250	XQ		99	999					vein type fault bxia
											upper contact 11S2
F	4250	4280	1B								intact to brken
F	4280	4360	G	4							gouge 40% recov.
F	4360	4450	BR								brkn to rubbly – recov OK
F	4450	4655	TB								poker chippy to brken —
											recov OK
F	4655	4720	3X						99	999	coherent fault bxa
											Tie fault rock
											upper contact IND
											lower contact 11S2
F	4655	4685	P								10% recovery, pebbles
F	5000	5050	XG								fault bxa & gouge
											upper contact IND
											DDH ends in fault
											EOH

CYPRUS ANVIL MINING CORPORATION

DIAMOND DRILL CORE LOG

Hole Number: 71-213

Project: _____

Location: _____

Claim: _____

Terr. Plane Co-ords.: _____ N

_____ E

Grid Co-ords.: _____

_____

Elevation: _____

Total Depth: _____

Fabric Orientation Diagram:

All symmetry determinations looking

_____ with _____ dipping

_____ with dip azimuth _____.

Purpose: _____

Logged by: _____ Date(s) Logged: _____

Drilling Contractor: _____ Core: Size From To Collar Cased and Capped: _____

_____ _____ _____

_____ _____ _____

_____ _____ _____

Started: _____ Completed: _____

Cyprus Anvil Mining Corp.

Diamond Drill Core Log

DDH (2–8)

Code	Drillhole	Elevation	Northing	Easting	Comments
	2–8	10–16	17–24	25–32	34–48
T					

Code	Drillhole	Depth	Zenith Angle	True Azimuth	Comments
	2–8	10–14	22–26	28–32	34–56
R		0 0	.	.	A T C O L L A R
R			.	.	
R			.	.	
R			.	.	
R			.	.	
R			.	.	
R			.	.	
R			.	.	
R			.	.	
R			.	.	
R			.	.	
R			.	.	
R			.	.	
R			.	.	
R			.	.	

Code	Drillhole	Comments, Errant Remarks, Snivellings and/or Lewd Suggestions
	2–8	10–47

DDH [illegible] 2 8

Lithologic Log

Logged By: [illegible]

Code	From	To	Unit	Code	Description
1	10 14	16 20	22 23	25 27	
4	1100	1610	11	##	Overburden
4	1610	1565	12	4C0	
4	1565	1605	13	4G0	Weakly calc., lt olive green
4	1605	2580	14	4C0	
4	2580	2650	15	4G0	Weakly calc lt olive green
4	2650	2995	16	4C0	
4	2995	3025	17	4G0	As unit 3,5
4	3025	3105	18	4C0	
4	3105	3143	19	4G0	As unit 3,5,7
4	3143	3245	110	4C0	
4	3245	3550	11	4G0	w/ minor 4C0 interbands
4	3550	3900	1,2	4C0	
4	3900	4471	13	4C2	
4	4471	5050	14	4G0	As units 3,5,7,9,11 ⟹ calc activity in this part of pile

CYPRUS ANVIL MINING CORPORATION

Page 1 of _____

DIAMOND DRILL CORE LOG

Date: _____

Hole Number: KA77A01

Reference Fabric Orientation Diagram:

Project: Vangorda Plateau remap

Location: _____

Claim: _____

Terr.Plane Co-ords.: _____ N

_____ E

Grid Co-ords: _____

Elevation: _____

All symmetry determinations looking

Total Depth: 138.1 feet = 42.1 metres

_____ with _____ dipping

Inclination: -90°

_____ with dip azimuth _____.

Purpose: To test open pit area

Reason hole Terminated: _____

Logged by: GAS/LCD

Date(s) Logged: August 25, 1984

Drilling Contractor: _____

CORE Size	From	To
_____	_____	_____
_____	_____	_____
_____	_____	_____

Collar Cased and Capped: _____

Hole Cemented: _____

Steel down hole: _____

Started: July 16/1977 Completed: _____

Cyprus Anvil Mining Corp. Page 2 of _____

DDH KA77A01 (2 8)

Diamond Drill Core Log Date: _____ Logged By: _____

Code	Drillhole	Elevation	Northing	Easting	Units (feet/metres)	R.F.E.	
	2 8	10 16	17 24	25 32	34 39	41 42	
T	KA77A01						

Code	Drillhole	Depth	Zenith Angle	True Azimuth	Comments
	2 8	10 14	22 26	28 32	34 56
R	KA77A01	00	180.0	0.0	AT COLLAR
R			.	.	
R			.	.	
R			.	.	
R			.	.	
R			.	.	
R			.	.	
R			.	.	
R			.	.	
R			.	.	
R			.	.	
R			.	.	
R			.	.	
R			.	.	
R			.	.	
R			.	.	
R			.	.	
R			.	.	
R			.	.	
R			.	.	
R			.	.	
R			.	.	
R			.	.	
R			.	.	
R			.	.	
R			.	.	
R			.	.	
R			.	.	
R			.	.	
R			.	.	

Code	Drillhole	Comments, Errant Remarks, Snivellings and / or Lewd Suggestions
	2 8	10 56

C.A.M.C. 1981 - E-2

Drilled July 16, 1977

Fect

DDH KA77A01
2 8
stored as BH 77-1

Cyprus Anvil Mining Corp.
Lithologic Log

Page 3 of

Date: Aug 25/84 Logged By:

Code	From	To	Recov.	No.	Unit	Description
L	0	109		1	#	OB
L	109	122		2	#	No core.
L	122	135		3	5C74	$
						Orange-tan weathering, greenish-light grey fresh, noncalc, slightly dolomitic carbonated metabasite. Chlorite streaks between off-grey dolomite/ankerite? Minor fuchsite at EOI. Typical subsurface leopard rock texture. Core thrashed — very broken.
L	135	138		4	4D4	±5 → 4A4
						Hard, brnish grey, noncalcareous, sphalerite-rich qtzite. S2 surfaces light med grey. Total sulphides 20%, mainly sphal, minor py. Core v broken, fracture surfaces mod. oxidized. Unsplit-grade estimated +10%. Transitional to 4A4 locally.
						EOH = 138.1
						STRUCTURE — S2 — S1
						127 — CS2 — 50° — 20/180
						126 — CS2 — 47° — 20/000
						L2 plunging shallowly at 070 direction from low point (at 126').

C.A.M.C. 1981 - E - 3A

CYPRUS ANVIL MINING CORPORATION

Page 1 of _____

DIAMOND DRILL CORE LOG

Date: _____

Hole Number: KA 77402

Reference Fabric Orientation Diagram:

Project: Vangorda Plateau remap

Location: _____

Claim: _____

Terr.Plane Co-ords.: _____ N

_____ E

Grid Co-ords: _____

Elevation: _____

All symmetry determinations looking

Total Depth: 40.0 feet = 12.2 metres

_____ with _____ dipping

Inclination: -90°

_____ with dip azimuth _____.

Purpose: Shrimp Lake tailings damsite

Reason hole Terminated: _____

Logged by: GAS/LCP

Date(s) Logged: August 25/1984

Drilling Contractor: _____

Size	CORE From	To

Collar Cased and Capped: _____

Hole Cemented: _____

Steel down hole: _____

Started: July 19/1977 Completed: _____

Cyprus Anvil Mining Corp. Page 2 of _____

DDH KA77A02 (2 8)

Diamond Drill Core Log Date: _____ Logged By: _____

Code	Drillhole	Elevation	Northing	Easting	Units (feet/metres)	R.F.E.	
1	2 8	10 16	17 24	25 32	34 39	41 42	
T	KA77A02						

Code	Drillhole	Depth	Zenith Angle	True Azimuth	Comments
1	2 8	10 14	22 26	28 32	34 56
R	KA77A02	00	180.0	0.0	AT COLLAR
R			.	.	
R			.	.	
R			.	.

Feet

Shrimp Lake
Tailings damsite

Drilled July 19/77

DDH KA77A02
2 8
stored as BH 77-2

Cyprus Anvil Mining Corp.
Lithologic Log

Page _____ of _____

Date: Aug 25/84 Logged By: GAJ/LCP

Code	From	To	Recov.	No.	Unit	Description
1	10 14	16 20	22 24	26 28	30 34	35
L	0 0	5 8		1	#	Overburden — no recovery 5
	5 8	9 0				Triconed - no recovery
L	5 8	13 0		2		
						V. fine-grained, dk grey, massive to weakly banded & foliated, slightly calcareous to mod. calcareous argillite. Fizzes very weakly in 10% Extensively crosscut by small qtz-dolomite (?) veinlets. Contains minor very small chert nodules parallel to banding. Possibly a dolomite. Similar to silty dolomites on Swim Lake Road — but they weather orange. Very brken to rubbly
L	13 0	29 9		3		
						Dark grey to black, noncalc, mod. hard to mod. soft locally, carbonaceous phyllite. Weak "Dolo flash". Poorly developed lithon texture. Characterized by thin white qtzose laminae in dk grey to black matrix. Very brkn to rubbly
L	29 9	40 0		4		
						Pale yellowish to greyish green, weakly to mod. foliated, v. fine grained, noncalc, amygdaloidal chloritic phyllite. Locally weakly dolomitic — esp where yellowish green — these locations also have minor fuchsite specks. Small rounded white spots 2-5 mm across — appear to be amygdules — v. abundant in top 3' — interval also yellow & carbonated. Sometimes difficult to disting. from qtz-dolo veins (bxiated). Amygdules also qtz-dolomite. Groundmass has v. fine speckled texture w/ light tan sub-mm. microphenocrysts in light green, aphanitic chloritic matrix. Reasonable Menzie Creek. Mod. brken

EOH = 40.0 feet.

C.A.M.C. 1981 - E - 3A

DDH KA77A02 (2 8)

Cyprus Anvil Mining Corp.

Structural Log

Page _____ of _____

Date: _____ Logged By: _____

Code	From	To	Feature	Sym	S_0 Dip Direct.	S_1 Dip Direct.	S_2 Dip Direct	Description
1	10 14	16 20	22 24	26	28 32	34 38	40 44	
S		220	CS2	M			45	largely M region
S		230	CS2	M			32	
S		290	CS2	Z			35	
$		390	PS1				42	??
$		360	PS1				50	??

C.A.M.C. 1981 - E - 4

CYPRUS ANVIL MINING CORPORATION

Page 1 of _____

DIAMOND DRILL CORE LOG

Date: _____

Hole Number: KA77A06

Reference Fabric Orientation Diagram:

Project: Vangorda Plateau remap

Location: _____

Claim: _____

Terr.Plane Co-ords.: _____ N

_____ E

Grid Co-ords: _____

Elevation: _____

All symmetry determinations looking

Total Depth: 66.8 feet = 20.4 m.

_____ with _____ dipping

Inclination: -90°

_____ with dip azimuth _____.

Purpose: _____

Reason hole Terminated: _____

Logged by: GAS/LCP

Date(s) Logged: August 25/1984

Drilling Contractor: _____

	CORE		
Size	From	To	Collar Cased and Capped: _____
_____	_____	_____	
_____	_____	_____	
_____	_____	_____	

Hole Cemented: _____

Steel down hole: _____

Started: _____ Completed: _____

Cyprus Anvil Mining Corp. Page 2 of _____

DDH KA77A06 (2–8)

Diamond Drill Core Log Date: _____ Logged By: _____

Code	Drillhole (2–8)	Elevation (10–16)	Northing (17–24)	Easting (25–32)	Units (feet/metres) (34–39)	R.F.E. (41–42)	
T	KA77A06						

Code	Drillhole (2–8)	Depth (10–14)	Zenith Angle (22–26)	True Azimuth (28–32)	Comments (34–56)
R	KA77A06	100	180 • 0	0 • 0	AT COLLAR
R			•	•	
R			•	•	
R			•	•

DDH KA77-A06
2 8
stored as BH 77-6

Cyprus Anvil Mining Corp.
Lithologic Log

Date: Aug 25/84 Logged By: GAS/LCP

Code	From	To	Recov.	No.	Unit	Description
1	10 14	16 20	22 24	26 28	30 34	35
L	10 0	117 3		1	#	overburden
	117 3	616 8			5B61#	minor (10Q#)
						Assemblage of chips, rubble, gouge of med grey to dark med grey, micaceous, probably dolomitic phyllite and white vein qtz. 30% of rubble is qtz - minor dolomite vein material looks like Vangorda instead of Myo
						EOH = 66.8
						Not terribly clear it isn't a continuation of overburden. Overall homogeneous nature suggests it may be bedrock.

C.A.M.C. 1981 - E - 3A

CYPRUS ANVIL MINING CORPORATION Page 1 of _____

DIAMOND DRILL CORE LOG Date: _____

Hole Number: KA77A07

Reference Fabric Orientation Diagram:

Project: Vangorda Plateau resmap

Location: _____

Claim: _____

Terr.Plane Co-ords.: _____ N

_____ E

Grid Co-ords: _____

Elevation: _____

All symmetry determinations looking

Total Depth: 35.0 feet = 10.7 metres

_____ with _____ dipping

Inclination: -90°

_____ with dip azimuth _____.

Purpose: _____

Reason hole Terminated: _____

Logged by: GAS/LCP

Date(s) Logged: August 25/1984

Drilling Contractor: _____

CORE Size	From	To
_____	_____	_____
_____	_____	_____
_____	_____	_____

Collar Cased and Capped: _____

Hole Cemented: _____

Steel down hole: _____

Started: _____ Completed: _____

Cyprus Anvil Mining Corp. Page 2 of _____

DDH KA77A07 (2–8)

Diamond Drill Core Log Date: _____ Logged By: _____

Code	Drillhole	Elevation	Northing	Easting	Units (feet/metres)	R.F.E.	
	2 8	10 16	17 24	25 32	34 39	41 42	
T	KA77A07						

Code	Drillhole	Depth	Zenith Angle	True Azimuth	Comments
	2 8	10 14	22 26	28 32	34 56
R	KA77A07	00	/90 • 0	9 • 0	AT COLLAR
R			•	•	
R			•	•	
R			•	•

Feet

DDH KA77A07 (2 / 8)

stored as BH 77-7

Cyprus Anvil Mining Corp.
Lithologic Log

Date: ~~Aug 25/84~~ Logged By: GAS/LCC

Code	From	To	Recov.	No.	Unit	Description
1	10 14	16 20	22 24	26 28	30 34	35
L	0	15.0		1	##	Overburden no recovery
L	15.0	21.1		2	58210	Chips of dark med grey, weakly calc, lithonel phyllite. Last 1' texturally resembles SF but is still grey.
L	21.1	35.0		3	5631	Mod. foliated, med. greyish green, calcareous, mottled metabasite. Typical field legend spots on S2. S2 foliation med. green w/ dk. green spots. Contains euhedral py. porphs up to 1cm across. Also beige, probable dolomitic porphs.
						EOH = 35.0

Structure	feet		S2	S1	
	19.5	CS2	25°		
	22.0	CS2	55°	25/000	} L2 subhorizontal
	20.0	CS2	60°	01/000	}
	23.5	PS2 (PS1?)	24°		
	23.0	PS2?	22°		
	33.0	PS2?	20°		

CYPRUS ANVIL MINING CORPORATION Page 1 of _____

DIAMOND DRILL CORE LOG Date: _____

Hole Number: KA77A08

Reference Fabric Orientation Diagram:

Project: Vangorda Plateau remap

Location: _____

Claim: _____

Terr.Plane Co-ords.: _____ N

_____ E

Grid Co-ords: _____

Elevation: _____

All symmetry determinations looking

Total Depth: 68.5 feet = 20.9 metres

_____ with _____ dipping

Inclination: -90°

_____ with dip azimuth _____.

Purpose: _____

Reason hole Terminated: _____

Logged by: GAS/LCP

Date(s) Logged: August 25/1984

Drilling Contractor: _____

CORE Size	From	To
_____	_____	_____
_____	_____	_____
_____	_____	_____

Collar Cased and Capped: _____

Hole Cemented: _____

Steel down hole: _____

Started: August 17/77 Completed: _____

C.A.M.C. 1981 - E - 1

Cyprus Anvil Mining Corp. Page 2 of _____

DDH KA77A09 (2 8)

Diamond Drill Core Log Date: _____ Logged By: _____

Code	Drillhole	Elevation	Northing	Easting	Units (feet/metres)	R.F.E.	
	2 8	10 16	17 24	25 32	34 39	41 42	
T	KA77A09						

Code	Drillhole	Depth	Zenith Angle	True Azimuth	Comments
	2 8	10 14	22 26	28 32	34 56
R	KA77A09	1000	180 • 0	0 • 0	AT COLLAR
R			•	•	
R			•	•	
R			•	•

Feet

drilled Aug 17/77

DDH KA77A08
2 8
stored as BH77-8

Cyprus Anvil Mining Corp.
Lithologic Log

Page _____ of _____

Date: Aug 25/84 Logged By: OAS / LLP

Code	From	To	Recov.	No.	Unit	Description
1	10 14	16 20	22 24	26 28	30 34	35
	0 0	55 2		1	#	
	55 2	68 5		2	500	
						Med grained, med. greyish green, slightly foliated, mottled metabasite. Noncalc. Excellent relict igneous texture - 2-5 mm. pyroxenes and 2-5 mm. feldspar laths in light greenish grey matrix (feldspar & chlorite?) Small mottled beige possible dolomite. Relatively intact. Massive & homogenous
						EOH = 68.5
						STRUCTURE 57'

C.A.M.C. 1981 - E - 3A

CYPRUS ANVIL MINING CORPORATION Page 1 of _____

DIAMOND DRILL CORE LOG Date: _____

Hole Number: KA77A09
stored as BH 77-9

Reference Fabric Orientation Diagram:

Project: Vangorda Plateau remap

Location: _____

Claim: _____

Terr.Plane Co-ords.: _____ N

_____ E

Grid Co-ords: _____

Elevation: _____

All symmetry determinations looking

Total Depth: 66.1 feet = 20.1 metres

_____ with _____ dipping

Inclination: -90°

_____ with dip azimuth _____.

Purpose: _____

Reason hole Terminated: _____

Logged by: GAI/LCP

Date(s) Logged: August 25/1984

Drilling Contractor: _____

CORE Size	From	To	Collar Cased and Capped:
_____	_____	_____	
_____	_____	_____	
_____	_____	_____	

Hole Cemented: _____

Steel down hole: _____

Started: Aug 20/1977 Completed: _____

Cyprus Anvil Mining Corp. Page 2 of _____

DDH KA77A09 (2–8)

Diamond Drill Core Log Date: _____ Logged By: _____

Code	Drillhole	Elevation	Northing	Easting	Units (feet/metres)	R.F.E.	
1	2 8	10 16	17 24	25 32	34 39	41 42	
T	KA77A09						

Code	Drillhole	Depth	Zenith Angle	True Azimuth	Comments
1	2 8	10 14	22 26	28 32	34 56
R	KA77A09	000	180.0	000.0	AT COLLAR
R			.	.	
R			.	.	
R			.	.	
R			.	.	
R			.	.	
R			.	.	
R			.	.	
R			.	.	
R			.	.	
R			.	.	
R			.	.	
R			.	.	
R			.	.	
R			.	.	
R			.	.	
R			.	.	
R			.	.	
R			.	.	
R			.	.	
R			.	.	
R			.	.	
R					
R					
R					
R					
R					
R					

Code	Drillhole	Comments, Errant Remarks, Snivellings and / or Lewd Suggestions
1	2 8	10 56

C.A.M.C. 1981 - E-2

Feet

drilled Aug 30/77

DDH KA77A09
2 8
stored as BH 77-9

Cyprus Anvil Mining Corp.
Lithologic Log

Page _____ of _____

Date: Aug 25/84 Logged By: GAH/LCP

Code	From	To	Recov.	No.	Unit	Description
1	10 14	16 20	22 24	26 28	30 34	35
L	00	513		1	#1	Overburden No recovery
L	513	575		2	5C101	Massive to poorly foliated, med. coarse-grained, med. greyish green metabasite. Excellent relict igneous texture w/ 2-5 mm pyroxenes in white felsophitic (?) groundmass. Locally phenocrysts of feldspars. Pyroxenes are dk brownish green — now largely chlorite. Some possible biotite. Similar to DDH BH 77-8 except coarser grained
L	575	616		3	5C1617	Minor $ minor. Mod. to strongly foliated, noncalcareous, chloritic phyllite/metabasite. Contains large versions of beige dolomite speckles (2-4 mm) Mod. developed lepidoblastic rock texture w/ discontinuous anastomosing chloritic folia. Sheared margin of metabasite. Pinkish beige graphs don't fizz reading ~ 20%. EOH = 616
						STRUCTURE S2 S1
						59' CS2 55 20/000
						61' CS2 60
						62' CS2 63 01/000
						65' CS2 45 20/000

C.A.M.C. 1981 - E - 3A

CYPRUS ANVIL MINING CORPORATION Page 1 of _____

DIAMOND DRILL CORE LOG Date: _____

Hole Number: KA77A12
stored as BH 77-12

Reference Fabric Orientation Diagram:

Project: Vangorda Plateau remap

Location: _____

Claim: _____

Terr.Plane Co-ords.: _____ N

_____ E

Grid Co-ords: _____

Elevation: _____

All symmetry determinations looking

Total Depth: 179.0 feet = 54.6 metres

_____ with _____ dipping

Inclination: -90°

_____ with dip azimuth _____.

Purpose: _____

Reason hole Terminated: _____

Logged by: GAS/LCP

Date(s) Logged: August 25/1984

Drilling Contractor: _____

CORE Size	From	To

Collar Cased and Capped: _____

Hole Cemented: _____

Steel down hole: _____

Started: Sept 18/1977 Completed: _____

Cyprus Anvil Mining Corp. Page 2 of _____

DDH KA77A12 (2 8)

Diamond Drill Core Log Date: _____ Logged By: _____

Code	Drillhole	Elevation	Northing	Easting	Units (feet/metres)	R.F.E.	
	2 8	10 16	17 24	25 32	34 39	41 42	
T	KA77A12						

Code	Drillhole	Depth	Zenith Angle	True Azimuth	Comments
	2 8	10 14	22 26	28 32	34 56
R	KA77A12	00	180	090	AT COLLAR
R					
R					
R					
R					
R					
R					
R					
R					
R					
R					
R					
R					
R					
R					
R					
R					
R					
R					
R					
R					
R					
R					
R					

Code	Drillhole	Comments, Errant Remarks, Snivellings and / or Lewd Suggestions
	1 2 8	10 56

C.A.M.C. 1981 - E-2

Feet

Drilled Sept 18/77

DDH KA77A12
2 8
stored as BH 77-12

Cyprus Anvil Mining Corp.
Lithologic Log

Page _____ of _____

Date: Aug 25/84 Logged By: GH/CAP

Code	From	To	Recov.	No.	Unit	Description
1	10 14	16 20	22 24	26 28	30 34	35
L	10 0	1318 7		1	#1	
L	1318 7	1519 2		2	*	No core
	1519 2	1790		3	5186	Med. grey, pencale, well lithified, mod. soft phyllite. Contains some dk grey bands. Abundant laminae of coarser, granular light grey siltstone. Weathers light silvery grey like Vangorda. Looks like Vangorda. Only doesn't fizz.
						159.2 - 168 Chips & rubble
						168 - 175 V. broken core
						175 - EOH Gouge, incip gouge, rubble.
						EOH = 179.0
						Structure
						160 CS2 90
						173 CS2 90

C.A.M.C. 1981 - E - 3A

CYPRUS ANVIL MINING CORPORATION

Page 1 of _____

DIAMOND DRILL CORE LOG

Date: _____

Hole Number: KA 77 A14
stored as BH 77-14

Reference Fabric Orientation Diagram:

Project: Vangorda Plateau canyon

Location: _____

Claim: _____

Terr.Plane Co-ords.: _____ N

_____ E

Grid Co-ords: _____

Elevation: _____

All symmetry determinations looking

Total Depth: 55.7 feet = 17.0 metres

_____ with _____ dipping

Inclination: -90°

_____ with dip azimuth _____.

Purpose: Lower Vangorda Creek

Reason hole Terminated: _____

Logged by: GAS/LCP

Date(s) Logged: August 25/1984

Drilling Contractor: _____

CORE Size	From	To
_____	_____	_____
_____	_____	_____
_____	_____	_____

Collar Cased and Capped: _____

Hole Cemented: _____

Steel down hole: _____

Started: Oct 10/1984 Completed: _____

Cyprus Anvil Mining Corp. Page 2 of _____

DDH KA-77-A-14 (2–8)

Diamond Drill Core Log Date: _____ Logged By: _____

Code	Drillhole	Elevation	Northing	Easting	Units (feet/metres)	R.F.E.	
	2 8	10 16	17 24	25 32	34 39	41 42	
T	KA77A14						

Code	Drillhole	Depth	Zenith Angle	True Azimuth	Comments
	2 8	10 14	22 26	28 32	34 56
R	KA77A14	00	180 • 0	0 • 0	AT COLLAR
R			•	•	
R			•	•	
R			•	•

Feet

Lower Vangorda Creek

drilled Oct 10/77

DDH KA77A14
2 8
stored as BH 77-14

Cyprus Anvil Mining Corp.
Lithologic Log

Page _____ of _____

Date: Aug 25/84 Logged By: GAS/CCP

Code	From	To	Recov.	No.	Unit	Description
1	10 14	16 20	22 24	26 28	30 34	35
L	00	353		1	#	Overburden
L	353	557			5B9	± 2 minor
						Med. grey, mod. soft to soft, PS2 f/td to locally lithoned, calcareous phyllite. Below 51' it is dark med. grey. No porphs visible
						EOH = 55.7
						Structure
						40 CS2 70
						42.8 CS2 → PS2 65
						49 PS2 65
						55.5 CS2 65
						L2 almost downdip

C.A.M.C. 1981 - E - 3A

CYPRUS ANVIL MINING CORPORATION Page 1 of _____

DIAMOND DRILL CORE LOG Date: _____

Hole Number: KA77A15
stored as BH 77-15

Reference Fabric Orientation Diagram:

Project: Vangorda Plateau remap

Location: _____

Claim: _____

Terr.Plane Co-ords.: _____ N

_____ E

Grid Co-ords: _____

Elevation: _____

All symmetry determinations looking

Total Depth: 75.1 feet = 22.9 metres

_____ with _____ dipping

Inclination: -90°

_____ with dip azimuth _____.

Purpose: Lower Vangorda Creek

Reason hole Terminated: _____

Logged by: GAS/LCP

Date(s) Logged: August 25, 1984

Drilling Contractor: _____

Size	CORE From	To

Collar Cased and Capped: _____

Hole Cemented: _____

Steel down hole: _____

Started: Oct 13/1977 Completed: _____

Cyprus Anvil Mining Corp. Page 2 of _____

DDH KA77A15 (2–8)

Diamond Drill Core Log Date: _____ Logged By: _____

Code	Drillhole	Elevation	Northing	Easting	Units (feet/metres)	R.F.E.	
	2 8	10 16	17 24	25 32	34 39	41 42	
T	KA77A15						

Code	Drillhole	Depth		Zenith Angle		True Azimuth	Comments
	2 8	10	14	22	26	28 32	34 56
R	KA77A15	1000		180 • 0		0 • 0	AT COLLAR
				•		•	
				•		•	
				•		•

Feet.

drilled Oct 13/77
lower Vangorda Ck

DDH KA77A15
2 8
stored as BH 77-15

Cyprus Anvil Mining Corp.
Lithologic Log

Page _____ of _____

Date: Aug 25/84 Logged By: GAS/LCP

Code	From	To	Recov.	No.	Unit	Description
1	10 14	16 20	22 24	26 28	30 34	35
L	0	50.5		1	#1	Overburden
L	50.5	71.5			SBIGS	Med. grey, slightly dolomitic, noncalc, lithomed phyllite. Looks like excellent Vangorda except noncalcareous. Probably same phyllite as DDH BH 77-6.
						To 57.5 v. broken w/ gouge & incip gouge
						To 67 rubble & gouge
						To 72.4 v. broken & rubble, 52 ll core axis
						To EOH rubble & incip gouge TND
						STRUCTURE
						52' CS2 → PS2 55
						68' PS2 } 05
						70' PS2 } → CS2 02
						57.5' PS2 45
						EOH = 75.1

C.A.M.C. 1981 - E - 3A

CYPRUS ANVIL MINING CORPORATION Page 1 of _____

DIAMOND DRILL CORE LOG Date: _____

Hole Number: KA77A16
stored as BH 77-16

Reference Fabric Orientation Diagram:

Project: Vangorda Plateau remap

Location: _____

Claim: _____

Terr.Plane Co-ords.: _____ N

_____ E

Grid Co-ords: _____

Elevation: _____

All symmetry determinations looking

Total Depth: 36.1 feet = 11.0 metres

_____ with _____ dipping

Inclination: -90°

_____ with dip azimuth _____.

Purpose: lower Vangorda Creek

Reason hole Terminated: _____

Logged by: GAS/LCP

Date(s) Logged: August 25/1984

Drilling Contractor: _____

CORE Size	From	To	Collar Cased and Capped: _____
_____	_____	_____	
_____	_____	_____	
_____	_____	_____	

Hole Cemented: _____

Steel down hole: _____

Started: Oct 15/77 Completed: _____

Cyprus Anvil Mining Corp. Page 2 of _____

DDH KA77A16 (2 8)

Diamond Drill Core Log Date: _____ Logged By: _____

Code	Drillhole	Elevation	Northing	Easting	Units (feet/metres)	R.F.E.	
	2 8	10 16	17 24	25 32	34 39	41 42	
T	KA77A16						

Code	Drillhole	Depth	Zenith Angle	True Azimuth	Comments
	2 8	10 14	22 26	28 32	34 56
R	KA77A16	100	180.0	0.0	AT COLLAR

Drilled Oct 15/77

DDH KA77A16
2 8
stored as BH 77-16

Cyprus Anvil Mining Corp.
Lithologic Log

Page _____ of _____

Date: _____ Logged By: _____

Code	From	To	Recov.	No.	Unit	Description
1	10 14	16 20	22 24	26 28	30 34	35
L	0 0	21 0		1	#	Overburden no core
L	21 0	36 1		2	5B16$	±0
						Med. grey, well lithoned, slightly calcareous, dolomitic phyllite. Lithons locally weather orange tan & fizz weakly in 20% About 10% of lithon-forming bands are calcareous Core mod. broken, very little rubble or gouge
						EOH 36.1 feet
						25.0 CS2 S 68°
						L2 045° from S2 low point
						35 CS2 75
						L2 350° from S2 low point
						CSn 340° from S2 low point
						crenulation cleavage
						lin.

C.A.M.C. 1981 - E - 3A

CYPRUS ANVIL MINING CORPORATION Page 1 of ____

DIAMOND DRILL CORE LOG Date: _____

Hole Number: KA77A17
stored as BH 77-17

Reference Fabric Orientation Diagram:

Project: Vangorda Plateau remap

Location: _____

Claim: _____

Terr.Plane Co-ords.: _____ N

_____ E

Grid Co-ords: _____

Elevation: _____

All symmetry determinations looking

Total Depth: 358 feet = 109 metres

_____ with _____ dipping

Inclination: -90°

_____ with dip azimuth _____.

Purpose: Lower Vangorda Creek

Reason hole Terminated: _____

Logged by: GAJ/LCP

Date(s) Logged: August 25/84

Drilling Contractor: _____

CORE Size	From	To

Collar Cased and Capped: _____

Hole Cemented: _____

Steel down hole: _____

Started: Oct 17/1977 Completed: _____

Cyprus Anvil Mining Corp. Page 2 of _____

DDH KA77A17 (2 8)

Diamond Drill Core Log Date: _____ Logged By: _____

Code	Drillhole	Elevation	Northing	Easting	Units (feet/metres)	R.F.E.	
I	2 8	10 16	17 24	25 32	34 39	41 42	
T	KA77A17						

Code	Drillhole	Depth	Zenith Angle	True Azimuth	Comments
I	2 8	10 14	22 26	28 32	34 56
R	KA77A17	100	180.0	0.0	AT COLLAR

Code	Drillhole	Comments, Errant Remarks, Snivellings and / or Lewd Suggestions
I	2 8	10 56

C.A.M.C. 1981-E-2

Feet

Drilled Oct 17/97
Lower Vangorda Ck.

DDH KA77A17
2 8
stored as BH 77-17

Cyprus Anvil Mining Corp.
Lithologic Log

Page _____ of _____

Date: Aug 25/84 Logged By: GH/CCP

Code	From	To	Recov.	No.	Unit	Description
1	10 14	16 20	22 24	26 28	30 34	35
L	18 0	119 0		1	##	Overburden No recovery
L	119 0	315 8		2		Med. grey to dk. grey, PS2 fine, noncalc. phyllite interbanded w/ minor med. grey, finely xlline calcite marble and w/ lesser amounts med yellowish olive green, amygdaloidal chloritic phyllite. Latter rock PS2 fine, fine-grained, noncalc., w/ small round to ovoid qtz-dolomite (?) filled amygdules. Minor fuchsite and minor qtz-dolomite veining subparallel to foliation. Chloritic phyllite largely below 29' where interlayered w/ dk grey, noncalc, PS2 fine phyllite.
						Menzie Ck volcanics and interlayered sediments. Menzie looks similar to SD – major difference is amygdules like dk green chloritic lenses which show as dk green spots on the yellowish green S2 foliation.
						EOH = 35.8
						21.0 PS2 65°
						26.5 CS2 75°
						34.0 PS2 68°
						L2 is down dip

C.A.M.C. 1981 – E – 3A