019313

Grum - ~~FAGA~~

072, 075, 076, 078,
080, 082, 084,
158, 214
17 Nov. 1983

FAGA072

DRILL HOLE : FAGA072

NORTHING : 905,073.4

EASTING : 592,215.2

ELEVATION : 1,304.4

TOTAL DEPTH : 195.0

SECTION : W 78

R.F.E. : S2

RFE DIRECTION: 230

PLUNGE ANGLE : 11

PLUNGE DIRECT: 312

DHD CALC: 1

SS CALC: 1

DETAIL RECORD COUNTS:

NOS ORE-SAMPLES:	26
NOS DOWN-H-SURVEYS:	3
NOS DOWN-H-LITHOLOGY:	70
NOS DOWN-H-STRUCTURE:	31
NOS DOWN-H-FAULTS:	18
NOS DOWN-H-SPLINES:	3
NOS COMPOSITES:	0

DDH: FAGA072 -- 42 DEGREE PROFILE

(VIEW AZIMUTH = 312 DEGREES)

ELEV: 1304 592215E ; 905073N

PLUNGE ANGLE IS 11.0 TREND ANGLE IS 312.0

CORRECTED COLLAR POSITION: X = 498.9 Z = 1303.8

SECTION NAME: 78W

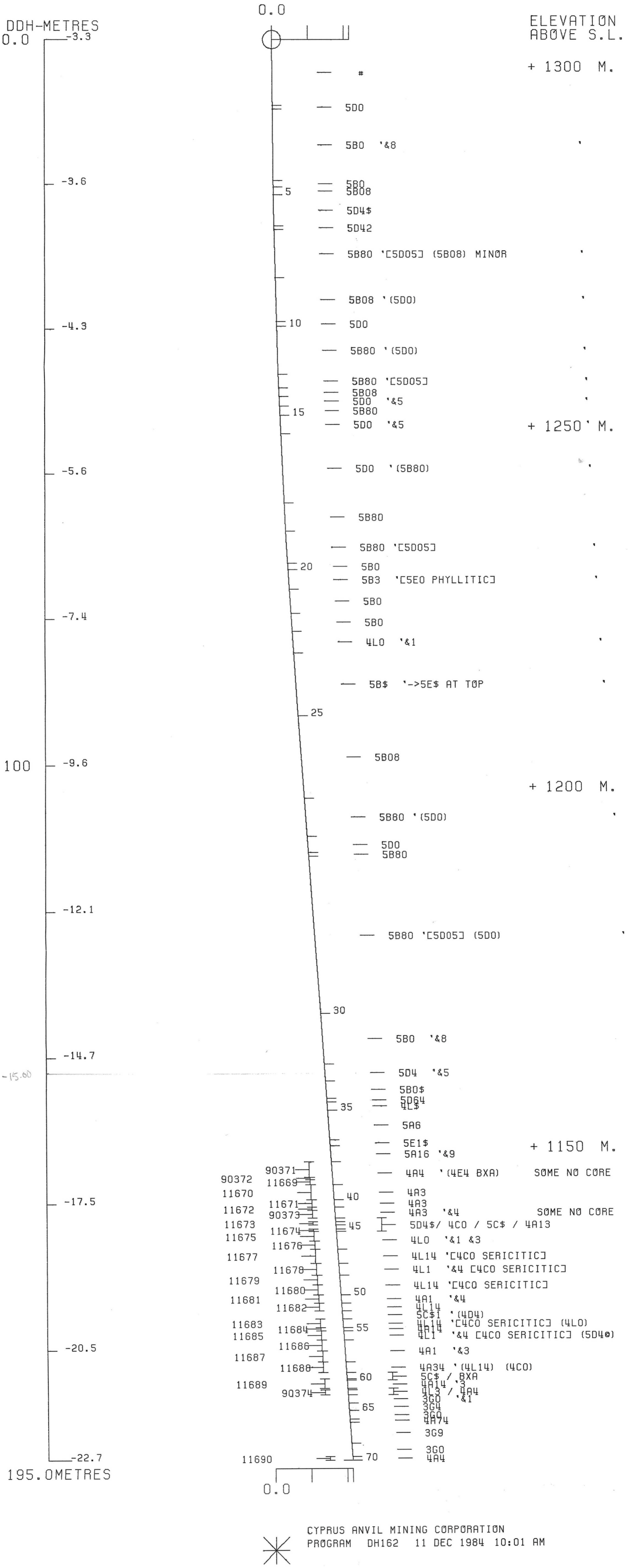

CYPRUS ANVIL MINING CORPORATION

PROGRAM DH162 11 DEC 1984 10:01 AM

DDH: FAGA072 -- 42 DEGREE PROFILE

(VIEW AZIMUTH = 312 DEGREES)

ELEV: 1304 592215E ; 905073N

PLUNGE ANGLE IS 11.0 TREND ANGLE IS 312.0

CORRECTED COLLAR POSITION: X = 498.9 Z = 1303.8

SECTION NAME: 78W

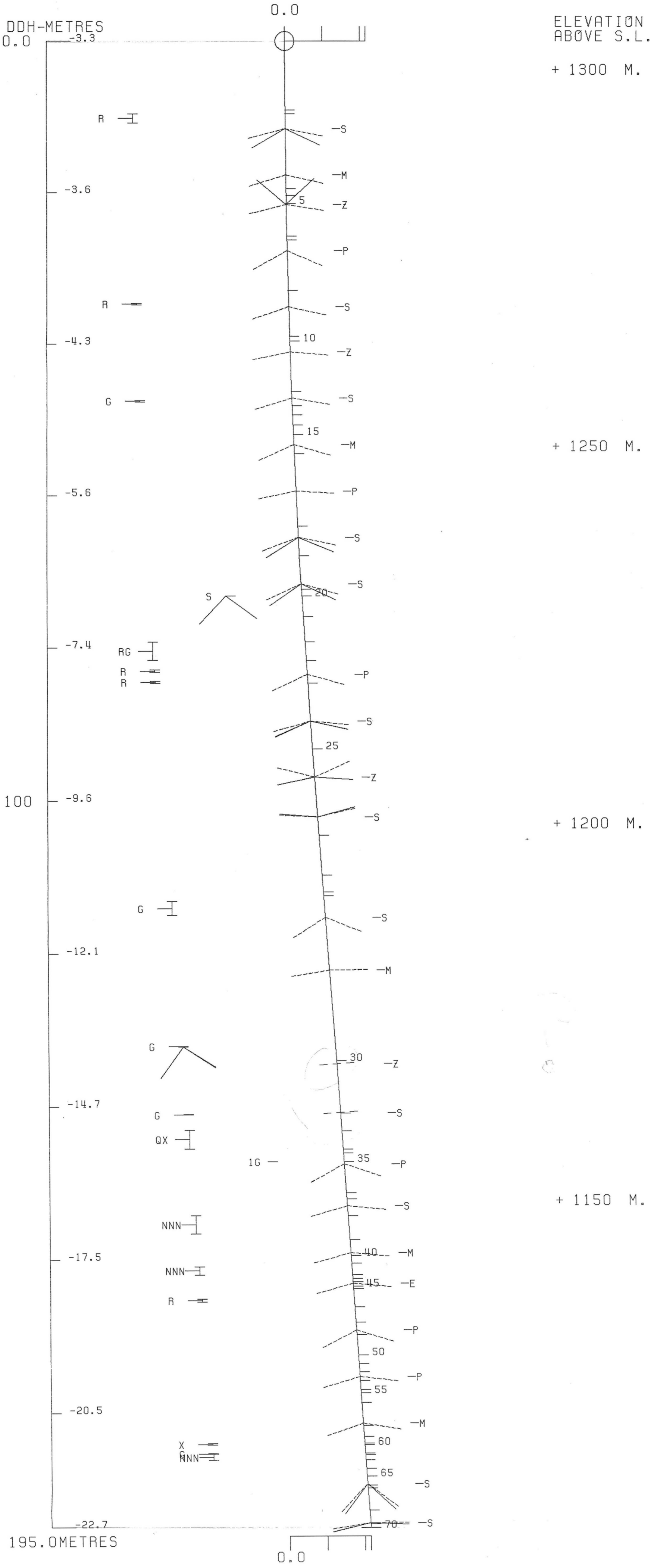

CYPRUS ANVIL MINING CORPORATION

PROGRAM DH161 11 DEC 1984 2:54 PM

DDH: FAGA072 UTM-N: 905,073.4 UTM-E: 592,215.2 UTM-ELEV: 1,304.4 TOTAL DEPTH: 195.0 SECTION: W 78
RFE: S2 RFE DIR: 230 PLUNGE ANGLES: 11 312 DHD CALC: 1 SS CALC: 1

DEPTHS FROM	DEPTHS TO	SAMPLE NO.	INT.	REC.	ROCK UNIT	ASSAYS S.G. PULP	CU %	PB %	ZN %	AG(AA) G/MT	AG(FA) G/MT	AU(FA) G/MT	PO %	PY %	TOT FE	BAO %	HG %	MN %	AS %	BA %	S.G. W.R.
154.3	156.4	90371	2.1	.0	4AE			9.52	18.11	126.09											
156.4	156.7	90372	.3	.0	4AE			5.63	12.44	79.50											
156.7	157.4	11669	.7	.7	4AE	3.60	.04	5.79	12.90	89.00		.95	1	9	11						
157.4	159.5	11670	2.1	2.1	4A3	3.43	.07	1.58	3.00	34.00		.95	1	15	16						
159.5	160.5	11671	1.0	.9	4A3	3.43	.05	.88	1.42	26.00		.81	1	19	20						
160.5	160.9	11672	.4	.4	4A3	3.56	.02	1.33	3.00	31.99		.55	1	12	14						
160.9	162.0	90373	1.1	.0	4A34			2.14	4.20	30.19											
162.5	162.9	11673	.4	.3	4C0	3.24	.07	2.60	.34	35.00		.40	3	7	10						
163.5	163.8	11674	.3	.2	4A13	3.14	.05	1.43	.40	26.00		.75	4	8	12						
163.8	165.1	11675	1.3	1.3	4L0	3.81	.02	.36	.80	9.00		.20	1	2	4						
165.1	166.2	11676	1.1	.9	4L0	3.12	.05	.49	1.17	13.99		.27	1	5	6						
166.2	168.2	11677	2.0	1.8	4L14	3.06	.05	1.11	1.88	21.00		.40	1	6	7						
168.2	169.8	11678	1.6	1.3	4L1	2.93	.02	.59	1.58	13.99	20.00	.40	1	4	5						
169.8	171.1	11679	1.3	1.2	4L14	3.04	.05	.96	2.60	20.00		.47	1	4	6						
171.1	172.5	11680	1.4	1.2	4L14	3.06	.05	1.17	2.20	20.00		.68	1	6	7						
172.5	173.6	11681	1.1	1.1	4A1	2.89	.04	1.77	1.65	26.00		.40	1	1	3						
173.6	174.7	11682	1.1	1.1	4L14	2.95	.02	1.73	3.99	36.00		.27	1	1	2						
175.8	177.0	11683	1.2	1.0	4L14	2.93	.02	.99	2.50	20.00		.20	3	1	5						
177.0	177.4	11684	.4	.4	4A14	3.02	.08	2.89	3.99	44.00		.89	1	6	7						
177.4	178.7	11685	1.3	1.3	4L1	2.95	.05	.64	1.30	12.00		.34	2	4	6						
178.7	180.2	11686	1.5	1.5	4A1	2.99	.05	.40	.86	10.00		.40	1	7	8						
180.2	181.7	11687	1.5	1.3	4A1	3.00	.05	.45	1.09	10.00		.40	1	6	8						
181.7	183.1	11688	1.4	1.4	4A34	3.24	.11	2.70	3.39	45.00	42.00	1.03	1	12	13						
184.0	185.3	11689	1.3	1.1	4A14	3.04	.05	1.18	2.60	27.00		.62	2	5	7						
185.5	186.2	90374	.7	.0	4A4			4.73	4.98	82.59											
194.6	195.1	11690	.5	.5	4A4		.04	2.70	5.70	54.00											
WEIGHTED AVERAGE																					
154.3	162.0		7.7	4.1		1.89	.03	4.26	8.35	64.20		.48		8	8						
162.5	162.9		.4	.3		3.24	.07	2.60	.34	35.00		.40	3	7	10						
163.5	174.7		11.2	10.1		3.11	.04	1.01	1.91	19.77	2.85	.41	1	4	5						
175.8	183.1		7.3	6.9		3.02	.06	1.13	1.91	20.57	8.05	.50	1	6	8						
184.0	185.3		1.3	1.1		3.04	.05	1.18	2.60	27.00		.62	2	5	7						
185.5	186.2		.7	.0				4.73	4.98	82.59											
194.6	195.1		.5	.5			.04	2.70	5.70	54.00											

DDH: FAGA072 UTM-N: 905,073.4 UTM-E: 592,215.2 UTM-ELEV: 1,304.4 TOTAL DEPTH: 195.0 SECTION: W 78
RFE: S2 RFE DIR: 230 PLUNGE ANGLES: 11 312 DHD CALC: 1 SS CALC: 1

DEPTH	ZENITH	AZIMUTH
0.000	180.000	0.000
92.000	172.000	97.500
177.400	170.500	106.500

DDH: FAGA072 UTM-N: 905,073.4 UTM-E: 592,215.2 UTM-ELEV: 1,304.4 TOTAL DEPTH: 195.0 SECTION: W 78
RFE: S2 RFE DIR: 230 PLUNGE ANGLES: 11 312 DHD CALC: 1 SS CALC: 1

DEPTH	UNIT	CODE	DESC	RECOVERY	IND
9.1	0001	#		0.5-	1
9.6	0002	5DC		0.5-	1
19.5	0003	5B0	&8	0.5-	1
20.4	0004	5B0		0.5-	1
21.5	0005	5B08		0.5-	1
25.8	0006	5D4$		0.5-	1
26.3	0007	5D42		0.5-	1
32.9	0008	5B80	[5D05] (5B08) MINOR	0.5-	1
39.0	0009	5B08	(5D0)	0.5-	1
39.6	0010	5D0		0.5-	1
46.3	0011	5B80	(5D0)	0.5-	1
48.2	0012	5B80	[5D05]	0.5-	1
49.4	0013	5B08		0.5-	1
50.7	0014	5DC	&5	0.5-	1
52.0	0015	5B80		0.5-	1
54.5	0016	5D0	&5	0.5-	1
64.0	0017	5D0	(5B80)	0.5-	1
67.9	0018	5B80		0.5-	1
72.3	0019	5B80	[5D05]	0.5-	1
73.2	0020	5B0		0.5-	1
75.9	0021	5B3	[5E0 PHYLLITIC]	0.5-	1
79.2	0022	5B0		0.5-	1
81.7	0023	5B0		0.5-	1
84.6	0024	4L0	&1	0.5-	1
93.2	0025	5B$	->5E$ AT TOP	0.5-	1
104.5	0026	5B08		0.5-	1
109.7	0027	5B80	(5D0)	0.5-	1
111.9	0028	5D0		0.5-	1
112.4	0029	5B80		0.5-	1
134.0	0030	5B80	[5D05] (5D0)	0.5-	1
140.9	0031	5B0	&8	0.5-	1
143.2	0032	5D4	&5	0.5-	1
145.6	0033	5B0$		0.5-	1
146.1	0034	5D64		0.5-	1
147.2	0035	4L$		0.5-	1
151.3	0036	5A6		0.5-	1
152.1	0037	5E1$	(5A$)	0.5-	1
154.3	0038	5A16	&9	0.5-	1
157.4	0039	4A4	(4E4 BXA) SOME NO CORE	0.5-	1
159.5	0040	4A3		0.5-	1
160.5	0041	4A3		0.5-	1
162.0	0042	4A3	&4 SOME NO CORE	0.5-	1
162.5	0043	5D4$	(5C4$)	0.5-	1
162.9	0044	4C0	SERICITIC (1CQ0) 90:10	0.5-	1
163.5	0045	5C$		0.5-	1
163.8	0046	4A13	(5C$)	0.5-	1
166.2	0047	4L0	&1 &3	0.5-	1
168.2	0048	4L14	[4C0 SERICITIC]	0.5-	1
169.8	0049	4L1	&4 [4C0 SERICITIC]	0.5-	1
172.5	0050	4L14	[4C0 SERICITIC]	0.5-	1
173.6	0051	4A1	&4	0.5-	1

DDH: FAGA072 UTM-N: 905,073.4 UTM-E: 592,215.2 UTM-ELEV: 1,304.4 TOTAL DEPTH: 195.0 SECTION: W 78
RFE: S2 RFE DIR: 230 PLUNGE ANGLES: 11 312 DHD CALC: 1 SS CALC: 1

DEPTH	UNIT	CODE	DESC	RECOVERY	IND
174.7	0052	4L14		0.5-	1
175.8	0053	5C$1	(4D4)	0.5-	1
177.0	0054	4L14	[4CO SERICITIC] (4LO)	0.5-	1
177.4	0055	4A14		0.5-	1
178.7	0056	4L1	&4 [4CO SERICITIC] (5D4@)	0.5-	1
181.7	0057	4A1	&3	0.5-	1
183.1	0058	4A34	(4L14) (4CO)	0.5-	1
184.0	0059	5C$		0.5-	1
184.2	0060	BXA	(4A1&4) (4D4)	0.5-	1
185.3	0061	4A14	3	0.5-	1
185.5	0062	4L3	GOUGE	0.5-	1
186.2	0063	4A4	(4L14) NO CORE	0.5-	1
187.3	0064	3GO	&1	0.5-	1
188.3	0065	3G4		0.5-	1
189.5	0066	3GO		0.5-	1
189.9	0067	4A74	1	0.5-	1
192.8	0068	3G9		0.5-	1
194.6	0069	3GO		0.5-	1
195.1	0070	4A4		0.5-	1

DOWN-HOLE STRUCTURE (DH020)

DDH: FAGA072 UTM-N: 905,073.4 UTM-E: 592,215.2 UTM-ELEV: 1,304.4 TOTAL DEPTH: 195.0 SECTION: W 78
RFE: S2 RFE DIR: 230 PLUNGE ANGLES: 11 312 DHD CALC: 1 SS CALC: 1

DDH	F DEPTH	T DEPTH	FEAT	SYMTRY	S0 ANGLE	S0 DIRECT	S1 ANGLE	S1 DIRECT	S2 ANGLE	S2 DIRECT	RFE CDE	DHDC	SDC	PROCESS
FAGA072	0.0	11.6	CS2	S	0	0	62	0	77	230	C	1	1	1
FAGA072	0.0	17.7	CS2	M	0	0	0	0	75	230	0	1	1	1
FAGA072	0.0	21.6	CS2	Z	0	0	48	180	78	230	0	1	1	1
FAGA072	0.0	27.7	PS2	P	0	0	0	0	64	230	0	1	1	1
FAGA072	0.0	35.1	CS2	S	0	0	0	0	74	230	0	1	1	1
FAGA072	0.0	41.1	CS2	Z	0	0	0	0	81	230	0	1	1	1
FAGA072	0.0	47.2	CS2	S	0	0	0	0	76	230	0	1	1	1
FAGA072	0.0	53.3	CS2	M	0	0	0	0	69	230	0	1	1	1
FAGA072	0.0	59.4	PS2	P	0	0	0	0	81	230	0	1	1	1
FAGA072	0.0	65.5	CS2	S	0	0	61	0	73	230	0	1	1	1
FAGA072	0.0	71.6	CS2	S	0	0	59	0	69	230	0	1	1	1
FAGA072	0.0	77.4	CS2	M	0	0	0	0	85	230	0	1	1	1
FAGA072	0.0	83.5	PS2	P	0	0	0	0	69	230	0	1	1	1
FAGA072	0.0	89.6	CS2	S	0	0	69	0	78	230	0	1	1	1
FAGA072	0.0	96.9	CS2	Z	0	0	82	180	70	230	0	1	1	1
FAGA072	0.0	102.1	CS2	S	0	0	78	0	80	230	0	1	1	1
FAGA072	0.0	108.2	CS2		0	0	0	0	87	230	0	1	1	1
FAGA072	0.0	115.2	CS2	S	0	0	0	0	62	230	0	1	1	1
FAGA072	0.0	122.2	CS2	M	0	0	0	0	82	230	0	1	1	1
FAGA072	0.0	128.3	CS2	M	0	0	0	0	84	230	0	1	1	1
FAGA072	0.0	134.4	CS2	Z	0	0	84	180	86	230	0	1	1	1
FAGA072	0.0	140.8	CS2	S	0	0	77	0	85	230	0	1	1	1
FAGA072	0.0	147.5	PS2	P	0	0	0	0	65	230	0	1	1	1
FAGA072	0.0	153.0	CS2	S	0	0	0	0	77	230	0	1	1	1
FAGA072	0.0	159.1	CS2	M	0	0	0	0	77	230	0	1	1	1
FAGA072	0.0	163.1	CS2	E	0	0	0	0	77	230	0	1	1	1
FAGA072	0.0	169.2	PS2	P	0	0	0	0	66	230	0	1	1	1
FAGA072	0.0	175.3	PS2	P	0	0	0	0	76	230	0	1	1	1
FAGA072	0.0	181.4	CS2	M	0	0	0	0	74	230	0	1	1	1
FAGA072	0.0	189.3	CS2	S	0	0	41	0	47	230	0	1	1	1
FAGA072	0.0	194.5	CS2	S	0	0	72	0	81	230	0	1	1	1

DDH: FAGA072 UTM-N: 905,073.4 UTM-E: 592,215.2 UTM-ELEV: 1,304.4 TOTAL DEPTH: 195.0 SECTION: W 78
RFE: S2 RFE DIR: 230 PLUNGE ANGLES: 11 312 DHD CALC: 1 SS CALC: 1

DDH	F DEPTH	T DEPTH	FEAT REC CD	PARLL	UPPER PLANE		INTERNAL PLANE		LOWER PLANE		DHD
FAGA072	9.6	10.8	R		0	0	0	0	0	0	1
FAGA072	34.6	34.8	R		0	0	0	0	0	0	1
FAGA072	47.5	47.7	G		0	0	0	0	0	0	1
FAGA072	0.0	73.2	S		0	0	47	0	0	0	1
FAGA072	79.2	81.6	RG		0	0	0	0	0	0	1
FAGA072	82.9	83.2	R		0	0	0	0	0	0	1
FAGA072	84.4	84.6	R		0	0	0	0	0	0	1
FAGA072	113.1	114.9	G		0	0	0	0	0	0	1
FAGA072	132.1	132.2	G		0	0	0	0	24	0	1
FAGA072	141.0	141.1	G		0	0	0	0	0	0	1
FAGA072	143.1	145.5	QX		0	0	0	0	0	0	1
FAGA072	0.0	147.2	1G		0	0	0	0	0	0	1
FAGA072	154.2	156.6	NNN		0	0	0	0	0	0	1
FAGA072	160.9	162.0	NNN		0	0	0	0	0	0	1
FAGA072	165.1	165.5	R		0	0	0	0	0	0	1
FAGA072	184.0	184.2	X		0	0	0	0	0	0	1
FAGA072	185.3	185.4	G		0	0	0	0	0	0	1
FAGA072	185.4	186.2	NNN		0	0	0	0	0	0	1

DDH: FAGA072 UTM-N: 905,073.4 UTM-E: 592,215.2 UTM-ELEV: 1,304.4 TOTAL DEPTH: 195.0 SECTION: W 78
RFE: S2 RFE DIR: 230 PLUNGE ANGLES: 11 312 DHD CALC: 1 SS CALC: 1

DDH	SEGMENT NOS	COND INDICATOR
FAGA072	1	2
FAGA072	2	2
FAGA072	3	1

**THIS REPORT WAS REQUESTED BY: LEEP .GEOLOGY AT: 09:13:27

CYPRUS ANVIL MINING CORPORATION

Page 1 of 8

DIAMOND DRILL CORE LOG

Date: 4 SEPT/81

Hole Number: FAGA-072

Project: GRUM RELOG

Location: SECTION 78W

Claim:

UTM ~~Terr.Plane~~ Co-ords.: 6 905 073.4m N

1979 HLW Survey

592 215.2 m E

Grid Co-ords: 4+10 N

77+82 W

Elevation: 1304.4m

Total Depth: 640 ft

Purpose: DEFINITION - GRUM DEPOSIT

Reason hole Terminated: TOO MUCH ORE

Logged by: GG

Date(s) Logged: 2-4 SEPT/81

Drilling Contractor:

Hole Cemented: 4 BAGS - 640' UP

Steel down hole:

Reference Fabric Orientation Diagram:

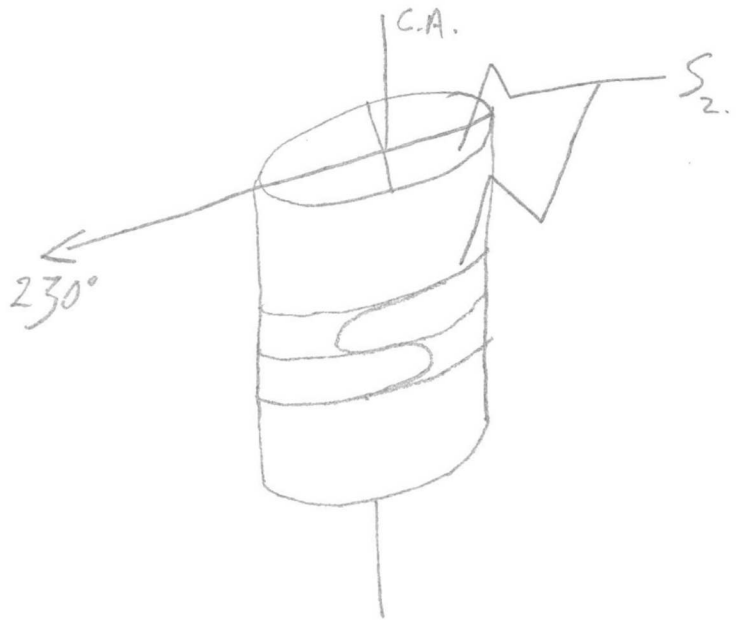

All symmetry determinations looking NW with S_2 dipping SW with dip azimuth 230°.

Size	CORE From	To
BW	0.0	32'
BQ	32	640'

Collar Cased and Capped: ____

Started: 6 MAY/75 Completed: 9 MAY/75

Cyprus Anvil Mining Corp.

DDH FAGA072 (2 8)

Diamond Drill Core Log Date: 4 SEPT 81 Logged By: GG

Code	Drillhole	Elevation	Northing	Easting	Units (feet/metres)	R.F.E.	
	2 8	10 16	17 24	25 32	34 39	41 42	
T	FAGA072	1304.4	905073.4	592215.2	FEET	S 2	

Code	Drillhole	Depth	Zenith Angle	True Azimuth	Comments
	2 8	10 14	22 26	28 32	34 56
R	FAGA072	0 0	180.0	0.0	AT COLLAR
R	FAGA072	3020	172.0	97.5	
R	FAGA072	5820	179.5	106.5	TROPARI MAG

Code	Drillhole	Comments, Errant Remarks, Snivellings and / or Lewd Suggestions
	2 8	10 56

DDH F.A.G.A.0.7.2 (2 — 8)

Cyprus Anvil Mining Corp.

Lithologic Log

Date: 2 SEPT/81 Logged By: GG

Code	From	To	Recov.	No.	Unit	Description	FW CNT Type	FW CNT #
1	10 — 14	16 — 20	22 — 24	26 — 28	30 — 34	35		
L	0 0	3 0 0		0 0 1	*	OVERBURDEN	—	
L	3 0 0	3 1 5		2	5 D 3	MASSIVE		11S2
L	3 1 5	6 4 0		3	5 B 3	±8 ; 4 ft H/W = DOMINANTLY		11S2
						COARSE RUBBLE		
L	6 4 0	6 7 0		4	5 B 3	-FINE GRAINED, DK GREY		11S2
L	6 7 0	7 0 5		5	5 B 3 8		RUBBLE	
L	7 0 5	8 4 5		6	5 D 4 *	DOLO, V. SERICITIC ; ENTIRE UNIT	RUBBLE PROB	11S2
						= RUBBLE IN CORETBOX; +POOR RECOVERY -POSS FAULT		
L	8 4 5	8 6 4		7	5 D A 2	/3/	RUBBLE PROB	11S2
L	8 6 4	1 0 8 0		8	5 D 3 5	+ (minor 5B38)		11S2
L	1 0 8 0	1 2 8 0		9	5 B 3 8	+ (5D3)		11S2
						RUBBLE - POSS. SMALL FAULT		
						@ 113.6 - 114.5 ft		
L	1 2 8 0	1 3 0 0		10	5 D 3	MASS	3cm Qz VN 11S2	
L	1 3 0 0	1 5 2 0		11	5 D B 3	V. CHLORITIC .. BUT TEXTURALLY		11S2
						RESEMBLES 5B THROUGH		
						MUCH OF UNIT;		
						+ (5D3 - MASS @ 145 - 147.5')		
L	1 5 2 0	1 5 8 0		12	5 D 3 5	GOUGE PROB 11S2 @ 156.0 - 156.7	RUBBLE (5cm) PROB	11S2
L	1 5 8 0	1 6 2 0		13	5 B 3 8	-SERICITIC	SHARP	11S2
L	1 6 2 0	1 6 6 4		14	5 D 3	±5 - NOTE CONTACTS →	GRADES 20cm	11S2
L	1 6 6 4	1 7 0 7		15	5 D B 3	AS UNIT 11; THIS UNIT IS	GRADES 10cm	11S
						A FOLD NOSE AS INDICATED BY-		
						(1) M-REGION		
						(2) SYMMETRY OF SD CONTACTS		
						AROUND IT;		
L	1 7 0 7	1 7 8 7		16	5 D 3	±5 ± MASS	SHARP	11S2
L	1 7 8 7	2 0 9 7		17	5 D 3	+(5DB3)		11S2
L	2 0 9 7	2 2 2 8		18	5 B B 3		GRADES 0.7m	
L	2 2 2 8	2 3 7 3		19	5 D B 3	SIMILAR TO UNIT 11;	GRADES 1 m	11S2
L	2 3 7 3	2 4 0 3		20	5 B 3		1 cm. SHEAR @ 47/00 wrt S2 = 69/230	
L	2 4 0 3	2 4 9 0		21	5 B 3	[5E3 - PHYL]		11S2
L	2 4 9 0	2 6 0 0		22	5 B 3	- COMMON TENSION GASHES		
						@ 29/140 wrt S2 = 62/230		
L	2 6 0 0	2 6 8 0		23	5 B 3	UNIT = 30% GOUGE POSS 11S2?	5cm Qz VN 11S2	

FLEET ↑

NOTE - INTERVALS ARE ±2 ft - ALL DRILLERS' FOOTAGE MARKERS FADED

60% COARSE RUBBLE

DDH FAGA072 (2 8)

Cyprus Anvil Mining Corp.
Lithologic Log

Page 4 of 8

Date: 2 Sept/81 Logged By: GG

FEET

Code	From	To	Recov.	No.	Unit	Description	F/W CNT TYPE	∡
1	10 14	16 20	22 24	26 28	30 34	35		
L	2680	2776		24	4L0	±1;	RUBBLE	
						272-273 = RUBBLE - POSS FAULT;		
						277-277.6 = ↑		
L	2776	3059		25	5B*	DOLO - APPROACHES [5E*]	GRADES 2m	//S_2
						TOWARD H/W; (+3 @ 2m F/W)		
L	3059	3430		26	5B38			//S_2
L	3430	3598		27	5B83	+ (5D3)	SHARP	//S_2
L	3598	3670		28	5D3	(+5 @ 0.8m H/W)		//S_2
L	3670	3689		29	5B83			//S_2
L	3689	4395		30	5DB3	- AS UNIT 11; + (5D3-MASS)	GRADES 10cm	
						GOUGES @ 371.3-377.0 ft		
						POSS //S_2		
						@433.5-434.0 - F/W CNT		
						IS 24/00 WRT		
						S_2 = 90/230		
L	4395	4622		31	5B3	±8		//S_2
L	4622	4698		32	5D43	±5; 462.8-463.2 = GOUGE - CNTS;		//S_2
L	4698	4776		33	5B3*	DOLO; ABUNDANT CALCITE-HEALED		//S_2
						CRACKLE BRECCIA +		
						TENSION GASHES @31/180		
						WRT S_2 = 63/230		
L	4776	4793		34	5D64		COARSE RUBBLE PROB	//S_2
L	4793	4830		35	4L*	DOLO	5cm GOUGE - CNTS?	
L	4830	4964		36	5A6	INCREASING CARBON TOWARD	GRADES 20cm	//S_2
						F/W; 2% IRREG CALCITE		
						VEINLETS → NOTE THIS		
						WHOLE AREA UNDERWENT		
						SOME LATE BRITTLE		
						DEFORMATION;		
L	4964	4989		37	5E1*	DOLO + (5A* DOLO)		//S_2
L	4989	5062		38	5A16	±9 HIGH CARBON 504.9-505.1 = 4D4* - POSS A	?	
						VEIN //S_2		
L	5062	5165		39	4A4	+ (4E4 - [4J]) - LOCALLY		//S_2
						4A APPEARS AS CLASTS		
						IN 4E4 SULPHIDE;		
						506.2-514.0 - WHOLE		

CORE SAMPLED BY K.A. - LITHOLOGY INTERPRETTED FROM FEW PIECES LEFT IN BOX;

DDH EAGA072 (2 — 8)

Cyprus Anvil Mining Corp.

Lithologic Log

Date: 3 SEPT/81 Logged By: GG

FEET

Code	From	To	Recov.	No.	Unit	Description	F/W CNT TYPE	F/W CNT #
1	10 — 14	16 — 20	22 — 24	26 — 28	30 — 34	35		
L	516.5	523.3		A0	4A3	see assays		11S2
L	523.3	526.5		A1	4A3	±4 see assays		11S2
L	526.5	531.5		A2	4A3	528-531.5 - MOST OF CORE		11S2
						SAMPLED BY K.A. - LITHOLOGY		
						INTERPRETED FROM FEW PIECES		
						LEFT IN COREBOX;		
L	531.5	532.6		A3	5DC*	531.5-532.6 = SD4*-DOLO -		11S2
						WITH 4LI AFFINITIES		
						532.6-533.2 = 5C*34 - DOLO		
						see assay 1% CHLORITE STREAKS;		
L	533.2	534.3		A4	4QO1	*SERICITIC + (10Q0) → 10% OF UNIT 11S2		11S2
L	534.3	536.3		A5	5C*	DOLO, 2% CHLORITE STREAKS		11S2
						GOOD 8cm FOLD NOSE @ 535.7		
L	536.3	537.3		A6	4A1	+(5C* - DOLO, 2% FUCH)		11S2
						THIS IS A TRANSITIONAL UNIT		
						OF INTERFINGERING 4A-5C		
						GOING TO A 4L WHICH IS		
						TEXTURALLY IDENTICAL TO THIS		
						4A. - THIS 5C-4A INTERFINGERING		
						MAY IMPLY THAT THIS 5C IS		
						A TUFFACEOUS REWORKED? SILT?		
L	537.3	545.4		A7	4L0	±1±3; 541.7-543.3 = FINE TALCOSE		
						RUBBLE - FAULT? CNTS?		
L	545.4	552.0		A8	4L14	[4CO-SERICITIC]	PROB	11S2
L	552.0	557.0		A9	4L1	±4 "		11S2
L	557.0	565.9		A10	4L14	"		11S2
L	565.9	569.5		50	4A1	±4 -C-PARTINGS		11S2
L	569.5	573.3		51	4L14	TEXTURALLY THESE 4A-4L's		11S2
						ARE THE SAME WITH ONLY		
						C OR SERICITE PARTINGS		
						DIFFENTIATING THEM;		
L	573.3	576.9		52	5C*1	-DOLO, 3% CHLORITE SPOTS →		11S2
						FUCHSITE @ 0.1m H/W; RAGGED		
						LENSES OF QZ;		
						+(4D4 @ 573.6-574.0)		
						- AGAIN THIS IS A MIXING		
						OF THE TUFFACEOUS? (SC)		
						& HYDROTHERMAL (?) QZ REGIMES;		

DDH FAGA072 (2 8)

Cyprus Anvil Mining Corp.

Lithologic Log

Date: 3 SEPT/81 Logged By: GG

FLEET

Code	From	To	Recov.	No.	Unit	Description	F/W CNT TYPE	F/W CNT *
	10 14	16 20	22 24	26 28	30 34	35 see assays		
L	5769	5807		53	4L1A	[4D4-SERICITIC] 4CO		11S2
						+(4LO @ 578.6-579.8 ft)		
L	5807	5821		54	4A1A			11S2
L	5821	5863		55	4L1	±4 [4CO-SERICITIC]		11S2
						+(5D4*-ANK, +RARE FUCHSITE		
						@ 584.6-584.9 ft)		
L	5863	5962		56	4A1	±3		11S2
L	5962	6008		57	4A3A	-C-BANDS & PARTINGS;		
						+(4L14+4CO @ 600.2-600.8)		
L	6008	6037		58	5C*	DOLO, 4% CHLORITE + FUCHSITE	54/00 wt S2 = 90/230	
						SPOTS;		
L	6037	604A		59	4AD4	BRECCIA	RUBBLE	
						4A1±4+4D4 ANG TO ROUNDED		
						CLASTS (0.1-1cm) IN A		
						CLOSED QZ-HEALED MATRIX;		
L	6044	6080		60	4A1A	4/	RUBBLE	
L	6080	6085		61	4L3	GOUGE	GOUGE	
L	6085	6110		62	4A4	+(4L4) - MOST OF CORE TAKEN		11S2
						BY K.A. - LITHOLOGY INTERPRETED		
						FROM FEW PIECES LEFT IN		
						COREBOX;		
L	6110	6144		63	3G2	-SER ±1	SHARP	11S2
L	6144	6179		64	3G4Z	NOTE CONTACTS →	GRADES 5cm	11S2
L	6179	6216		65	3G2	SERICITIC		11S2
L	6216	6229		66	4A7A	//		11S2
L	6229	6325		67	3G29	TEXTURALLY SIMILAR TO 4A	9cm QZ VN 11S2	
L	6325	6385		68	3G2	SERICITIC		11S2
L	6385	6400		69	4A4	TEXTURALLY SIMILAR TO ABOVE		
						3G's BUT HAS GOOD BANDS		
						OF WHITE QZ;		
						END OF HOLE @ 640.0 ft		

DDH FAGA072 (2 … 8)

Cyprus Anvil Mining Corp.

Structural Log

Date: 4 Sept/81 Logged By: GG

Feet

Code	From	To	Feature	Sym	S_0 Dip Direct.	S_1 Dip Direct.	S_2 Dip Direct	Description
1	10 … 14	16 … 20	22 … 24	26	28 … 32	34 … 38	40 … 44	
S		380	CSZ	S		62 010	77 230	
S		580	CSZ	M			75	REVERSING S/Z
S		710	CSZ	Z		48 180	78	
S		910	IND	R			64	
S		1150	CSZ	S			74	
S		1350	CSZ	Z			81	
S		1550	CSZ	S			76	
S		1750	CSZ	M			69	
S		1950	IND	R			81	
S		2150	CSZ	S		61 010	73	
S		2350	CSZ	S		59 010	69	
S		2540	CSZ	M			85	REVERSING S/Z // TENSION GASHES @ 027/180 249-258'
S		2740	IND	R			69	
S		2940	CSZ	S		69 010	78	
S		3150	CSZ	Z		82 180	70	
S		3350	CSZ	S		78 000	80	
S		3550	CSZ	H			87	M? → REVERSING S/Z
S		3780	CSZ	S			62	
S		4010	CSZ	M			82	REVERSING S/Z
S		4210	CSZ	M			84	"
S		4410	CSZ	Z		84 180	86	H?
S		4620	CSZ	S		77 010	85	H?
S		4840	IND	R			65	
S		5020	CSZ	S			77	BOTH S & Z FOLDS PRESENT - BUT DIPS REVERSALS IN S_2 PRESENT.
S		5220	CSZ	M			77	? SEVERAL FOLDS SEEN IN CORE AXIS.
S		5350	CSZ	E			77	6" FOLD NOSE
S		5550	IND	R			66	
S		5750	IND	R			76	
S		5950	CSZ	M			74	? SEVERAL FOLDS PRESENT APPEARS TO BE REVERSING E/3
S		6210	CSZ	S		41 010	47	
S		6380	CSZ	S		72 000	81	
								END OF HOLE @ 640'

DDH FAGA072 (2 … 8) Cyprus Anvil Mining Corp

Logged by GG

ASSAY LOG (SAMPLER'S COPY) Date 5 Sept/81 Sampled by

FEET

CODE	FROM	TO	SAMPLE	INTR.	REC (m)	UNIT	DESCRIPTION
1	10 … 14	16 … 20	22 … 26	28 … 30	32 … 34	36 … 40	42
P	5062	5130	116916	68		4A4	+(4E4) // WHOLE CORE SAMPLED BY K.A. SEE K.A. SAMPLE #1630
P	5130	5140	116917	10		4A4	+(4E4) // WHOLE CORE SAMPLED BY K.A. ESTIMATE FROM KA. SAMPLE #1631
P	5140	5165	116669	25	26	4A4	+(4E4
P	5165	5233	116710	68	73	4A3X	see assays
P	5230	5265	116711	35	30	4A3	
P	5265	5280	116712	15	17	4A34	
P	5280	5315	116918	35		4A34	WHOLE CORE SAMPLED BY K.A. ESTIMATE FROM K.A. SAMPLE #1634
	5315	5332		17		5DC*	LOW GRADE NOT SAMPLED // ASSAY = 0%
P	5332	5343	116713	11	10	4C0	X see assays + (10Q0)
	5343	5363		20		5C*	LOW GRADE NOT SAMPLED // ASSAY = 0%
P	5363	5373	116714	10	08	4A13	+(5C*)
P	5373	5417	116715	44	46	4L0	±1 ±3
P	5417	5454	116716	37	28	4L0	±1 ±3
P	5454	5520	116717	66	59	4L14	
P	5520	5570	116718	50	44	4L1	±4
P	5570	5615	116719	45	38	4L14	
P	5615	5659	116720	44	46	4L14	
P	5659	5695	116721	36	36	4A1	±4
P	5695	5733	116722	38	43	4L14	
	5733	5769		36		5C*1	+(minus 4D4) // LOW GRADE NOT SAMPLED // ASSAY = 0%
P	5769	5807	116723	38	34	4L1A	+(4L0)
P	5807	5821	116724	14	13	4A14	
P	5821	5863	116725	42	42	4L1	±4 +(5D4*)
P	5863	5913	116726	50	60	4A1	±3
P	5913	5962	116727	49	42	4A1	±3
P	5962	6008	116728	46	46	4A34	+(4L14)
	6008	6037		29		5C*	LOW GRADE NOT SAMPLED // ASSAY = 0%
P	6037	6080	116729	43	37	4A14	/3/ +(4AD4 - BRECCIA)
	6080	6085		05		4L3	LOW GRADE NOT SAMPLED // ASSAY = 0%
P	6085	6110	116999	25		4A4	+(4L14) // WHOLE CORE SAMPLED BY K.A. SEE K.A. SAMPLE #1695
SPLIT P	6385	6400	116910	15	16	4A4	(NOTE DDH ENDED IN ORE!)
							END OF HOLE @ 640 ft

FEET!

FAULT

DDH FAGA072 (2 8)

Cyprus Anvil Mining Corp.

Structural Log

Page _____ of _____

Date: _____ Logged By: _____

Code	From	To	Feature	Sym	S_0 Dip Direct.	S_1 Dip Direct.	S_2 Dip Direct	Description
1	10 14	16 20	22 24	26	28 32	34 38	40 44	
F	31 5	35 5	R					Coarse rubble
F	1136	1145	R					possible small fault
F	1560	1567	G					gouge prob. $\parallel S_2$
F		2403	S			47 000		1cm shear
F	2600	2680	RG					30% gouge - poss. $\parallel S_2$
F	2720	2730	R					} possible fault
F	2770	2776	R					}
F	3713	3770	G					poss. $\parallel S_2$
F	4335	4340	G				24 000	
F	4628	4632	G					
F	4698	4776	QX					crackle bxa healed w/ cc.
F		4830	IG					5cm gouge
F	5062	5140	NNN					K-A sample no core
F	5280	5315	NNN					K-A sample no core
F	5417	5433	R					rubble
F	6037	6044	X					breccia 4A1 & 4D4 clasts
								in closed, qtz-healed matrix
F	6080	6085	G					gouge
F	6085	6110	NNN					K-A sample - no core

DIAMOND DRILL RECORD

LOGGED BY D. Basco

PROPERTY VANGORDA, GRUM JOINT VENTURE

D.D.H. No. 75-A72 PAGE 1 of 5

LINE GRID HIW

LATITUDE 4 + 10N 35660.11N (10,869.20m N) BEARING OF HOLE BY TROPARI @ 302' -- 96° 50.5' Azim (True) @ 582' --105° 50.5' STARTED May 6, 1975 A.S.

DEPARTURE 77 + 82W 24685.59E (7524.17m E) DIP OF HOLE - 90° COMPLETED May 9, 1975 D.S.

ELEVATION 4272.16' 4314.16' (1314.96m) DIP TESTS BY TROPARI @ 302' -- -82° @ 582' -- -80° 30' DEPTH Proposed: 700' Ultimate: 640' (195.07m)

HOLE SIZE 0 - 32' --BW 32 -640' --BQ

CLAIM No.

N

DIRECTION AND DISTANCE FROM NE. CLAIM POST

FOOTAGE FROM	FOOTAGE TO	DESCRIPTION	Rec. Ft.	Sample No.	Footage From	Footage To	Sample Length	Assay Pb	Assay Zn	Assay Ag	Assay Au	Assay Cu	Assay x Feet Pb	Assay x Feet Zn	Assay x Feet Ag
0	30.0 ft.	OVERBURDEN													
30.0	125.0	QUARTZ - SERICITE - CHLORITE PHYLLITE													
		Gray-green, interlaminated quartz, sericite and chlorite; fine grained biotite, foliated and fissile. Badly weathered or sheared: 30-38', 47-49' and 50-51'. Broken or sheared: 68-88', 90-91', 113-114'. Mud seams: 53', 60', 122'. Core angle ranges from 70-80°. Striped with quartz carbonate.	6.5/8		30	38									
			8.5/10			48									
			4.5/5			53									
			15/15			68									
			6/19			87									
			36/38			125									
125.0	256.5	QUARTZ - SERICITE - CHLORITE PHYLLITE													
		Same as above, except that the rock herein referred to is relatively fresh and firmer. Mud seam @ 176'. Sheared @ 156.5' and 167'. Silicified 180-181', 206-209'. Abundant quartz-carbonate veins and veinlets along foliations and tension cracks. Well developed F2, occasional F1 subvertical to former. Relatively competent. Core Angles: 75-80°.	31.5/ 31.5		125.0	256.5									
256.5	279.0	BLEACHED QUARTZ - SERICITE PHYLLITE													
		White, interlaminated quartz, sericite and lesser chlorite. Silicified 267-269'. Incompetent. Sheared and faulted in parts 262-266', 271-273' and 277-279'. Core Angle: 75-80°.	3.2/ 3.5		256.5	260.0									
			4/6			266.0									
			9/13			279.0									

DIAMOND DRILL RECORD

LOGGED BY D. Basco

PROPERTY

LATITUDE BEARING OF HOLE STARTED

DEPARTURE DIP OF HOLE COMPLETED

ELEVATION DIP TESTS DEPTH Proposed: Ultimate:

D.D.H. No. 75-A72 PAGE 2 of 5

CLAIM No.

N

DIRECTION AND DISTANCE FROM NE. CLAIM POST

FOOTAGE FROM	FOOTAGE TO	DESCRIPTION	Rec. Ft.	Sample No.	Footage From	Footage To	Sample Length	Assay Pb	Assay Zn	Assay Ag	Assay Au	Assay Cu	Assay x Feet Pb	Assay x Feet Zn	Assay x Feet Ag
279.0	357.0	Similar to 125.0-256.5'. Firm where unsheared. Mud seams @ 275', 297'. Sheared 10° to core @ 308-309'. Core Angle: 70-80°.	78/78		279	357									
357.0	465.0	CHLORITE - SERICITE - QUARTZ PHYLLITE													
		Green-gray, approximately 40% chlorite, 30% sericite and 30% quartz. Foliated, striped with quartz-carbonate along foliation and tension cracks. Local quartz conformable veins, fine-grained brown biotite discernible under the lens. Firm where unsheared. Mud seams @ 369', 378', 396.5'. Broken or sheared and gougy: 369-377', 434.5'. Core Angle: 75-85°.	106/108		357.0	465.0									
465.0	479.0	CHLORITE - SERICITE - QUARTZ PHYLLITE													
		Similar to above, except that the rock is more broken. Sheared at 479'. Core Angle: 65-75°.	12.5/14		465.0	479.0									
479.0	483.0	BLEACHED QUARTZ - SERICITE PHYLLITE													
		White, hydrothermally altered and sheared.	2.5/4.0		479.0	483.0									

DIAMOND DRILL RECORD

LOGGED BY D. Basco

PROPERTY

LATITUDE BEARING OF HOLE STARTED

DEPARTURE DIP OF HOLE COMPLETED

ELEVATION DIP TESTS DEPTH Proposed: Ultimate:

D.D.H. No. 75-A72 PAGE 3 of 5

CLAIM No.

N

DIRECTION AND DISTANCE FROM NE. CLAIM POST

FOOTAGE FROM	FOOTAGE TO	DESCRIPTION	Rec. Ft.	Sample No.	Footage From	Footage To	Sample Length	Assay Pb	Assay Zn	Assay Ag	Assay Au	Assay Cu	Assay x Feet Pb	Assay x Feet Zn	Assay x Feet Ag
483.0	506.2	QUARTZ - SERICITE - CHLORITE - GRAPHITE PHYLLITE													
		Dark gray to black, interlaminated quartz, sericite, chlorite and graphite (5-15%) Abundant quartz veins, bleached to white quartz-sericite 498-499'. Sheared with gouge 483-484', 495'. Also partially bleached to quartz, sericite-chlorite phyllite 495.5-499.0'. Note: sphalerite-galena heavy mineralization (14% lead-zinc) @ 504.4-505.0' with quartz. Fissile.	22.6/ 23.2		483.0	506.2									
			/0.2		504.8	505.0		Estimate 14% lead-zinc							
						506.2		Estimate Nil lead-zinc							
					506.2										
506.2	531.5	MINERALIZED QUARTZ - SERICITE - GRAPHITIC PHYLLITE	6.8	1630	506.2	513.0	6.8	9.53	18.11	3.68			64.80	123.15	25.02
		506.2-513.0' -- massive bands of fine pyritic sulphide ore in a matrix of quartz, sericite and minor graphite. Estimated 40% pyrite and 22% lead-zinc.	3.3	1631		516.3	3.3	5.64	12.45	2.32			18.61	41.09	7.66
			7.6	1632		523.9	7.6	1.83	3.12	.82			13.908	23.712	6.232
		513.0-516.3' -- narrow bands of pyritic sulphide ore in same matrix above. 20% pyrite, 11% lead-zinc.	2.4	1633		526.3	2.4	.79	.95	.32			1.896	2.28	0.768
		516.3-531.5' -- narrower bands of pyritic sulphides in same rock carrying lesser sphalerite and galena, include:	5.2	1634		531.5	5.2	2.15	4.20	.88			11.18	21.84	4.576
		516.3-523.9' -- 20% pyrite, 4.5% lead-zinc -526.3' -- 20% pyrite, 1.5% lead-zinc -531.5' -- 12% pyrite, 6.5% lead-zinc													
				Wt. Av.	506.2	516.3	10.1	8.26	16.26	3.24	(		83.41	164.24	32.168
				Wt. Av.	516.3	531.5	15.2	1.78	3.15	0.76	(26.1)		26.984	47.832	11.576
531.5	573.2	QUARTZ - SERICITE PHYLLITE	1.7		531.5	533.2		Barren quartz, sericite, phyllite							
		White, bleached, alternating laminae of quartz, sericite, weakly mineralized by sulphides in gray quartz along foliations.	1.1	1635		534.3	1.1	2.50	.16	.88					
		Dissemination uneven with richer concentrations in parts. Sheared @ 542-543', 550-552', 555-557', 562-563'.	/2.1			536.4		Estimated 0.2% lead-zinc.							

DIAMOND DRILL RECORD

LOGGED BY D. Basco

PROPERTY

LATITUDE BEARING OF HOLE STARTED

DEPARTURE DIP OF HOLE COMPLETED

ELEVATION DIP TESTS DEPTH Proposed: Ultimate:

D.D.H. No. 75-A72 PAGE 4 of 5

CLAIM No.

N

DIRECTION AND DISTANCE FROM NE. CLAIM POST

FOOTAGE FROM	FOOTAGE TO	DESCRIPTION	Rec. Ft.	Sample No.	Footage From	Footage To	Sample Length	Assay Pb	Assay Zn	Assay Ag	Assay Au	Assay Cu	Assay x Feet Pb	Assay x Feet Zn	Assay x Feet Ag
		Core Angle: 75-85°.	5.8	1636	536.4	542.2	5.8	.75	.76	.26			4.35	4.408	1.508
			6.8	1637		552.0	9.8	1.04	1.46	.44			10.192	14.308	4.312
			5.0			557.0		Estimated 1.0% lead-zinc							
			8.5	1638	(563.2 -	566.0 566.0	9.0 2.8	1.18	1.96	.44			3.304	5.488	1.232
			7.2	1639		573.2	7.2	1.80	3.00	.74			12.96	21.60	5.326
				Wt.Av.	536.4	552.0	15.6	0.93	1.2	0.37	(12.8)		14.542	18.710	5.820
				Wt.Av.	563.2	573.2	10.0	1.63	2.71	0.66	(22.5)		16.264	27.088	6.558
573.2	579.0	BLEACHED WHITE SERICITE - QUARTZ PHYLLITE													
		Interlaminated, hydrothermally altered sericite and quartz. Rare specks of sphalerite and galena noted among sparse pyrite	5.6/ 5.8		573.2	579.0									
		dissemination along certain foliations 576.5-578.0'. Mud seams at 573.5'.													
		Core Angle: 85°.													
579.0	614.0	QUARTZ - SERICITE - GRAPHITIC PHYLLITE	7.0/ 7.9	1640	579.0	582.9	7.9	1.63	2.88	.59					
		Medium gray, alternating laminae of quartz, sericite and minor (2-5%) graphite, sparsely mineralized with disseminated pyrite	8.6	1641		591.5	8.6	.47	.77	.21			4.04	6.62	1.81
		sphalerite, galena along F2 and F1 foliations and tension cracks. Certain sections are somewhat enriched. Core broken @	2.5	1642		594.0	2.5	.63	1.44	.21			1.58	3.6	.53
		594-595'. Rock firm. Core Angle: 75-80°.	6.7 /4.0	1643		600.7 604.7	6.7	2.00	3.06	1.03					
		Bleached quartz-sericite in parts: 601-604', 608-609'.	3.5	1644	604.7	609.0	4.3	1.35	2.40	.62					
			3.0	1645		612.0	3.0	4.73	4.78	2.41					
614.0	624.0	BLEACHED QUARTZ - SERICITE PHYLLITE			582.9	597.0	11.1	.51	.92	.21	Weighted Average		5.62	10.22	2.34
		Originally graphitic. Firm. Core Angle: 60°. Cut high grade zinc and lead mineralization associated with pyrrhotite in	10/10		614	624									

DIAMOND DRILL RECORD

LOGGED BY D. Basco

PROPERTY

LATITUDE BEARING OF HOLE STARTED

DEPARTURE DIP OF HOLE COMPLETED

ELEVATION DIP TESTS DEPTH Proposed: Ultimate:

D.D.H. No. 75-A72 PAGE 5 of 5

CLAIM No.

N

DIRECTION AND DISTANCE FROM NE. CLAIM POST

FOOTAGE FROM	FOOTAGE TO	DESCRIPTION	Rec. Ft.	Sample No.	Footage From	Footage To	Sample Length	Assay Pb	Assay Zn	Assay Ag	Assay Au	Assay Cu	Assay x Feet Pb	Assay x Feet Zn	Assay x Feet Ag
		highly disturbed F1 and F2 foliation. Approximately 25% pyrite-pyrrhotite, 15% lead-zinc between 621.7-623.0'.													
624.0	640.0	GRAPHITIC QUARTZ - SERICITE - CHLORITIC PHYLLITE													
		Dark gray to black, interlaminated quartz and sericite with minor chlorite and lesser graphite. Silicified in parts. Firm.	8.6/9		624.0	633.0									
		Rich bands and dissem. bands of sphalerite and galena between 638.5' and 640'. 8% pyrite and 8% lead-zinc.	4.3/5.5			638.5									
		Core Angle: 75-80°.	1.5/1.5			640.0		Estimate 8% lead-zinc							
	640.0	END OF HOLE													
		Note: Another sulphide zone appears to start from 638.5'.													
		REMARKS: 1. Cemented hole from 640' up - used 4 bags of cement.													

DDH: FAGA069 -- 42 DEGREE PROFILE

(VIEW AZIMUTH = 312 DEGREES)

ELEV:1303 592206E ; 905159N

PLUNGE ANGLE IS 11.0 TREND ANGLE IS 312.0

CORRECTED COLLAR POSITION: X = 556.6 Z = 1314.4

SECTION NAME: 78W

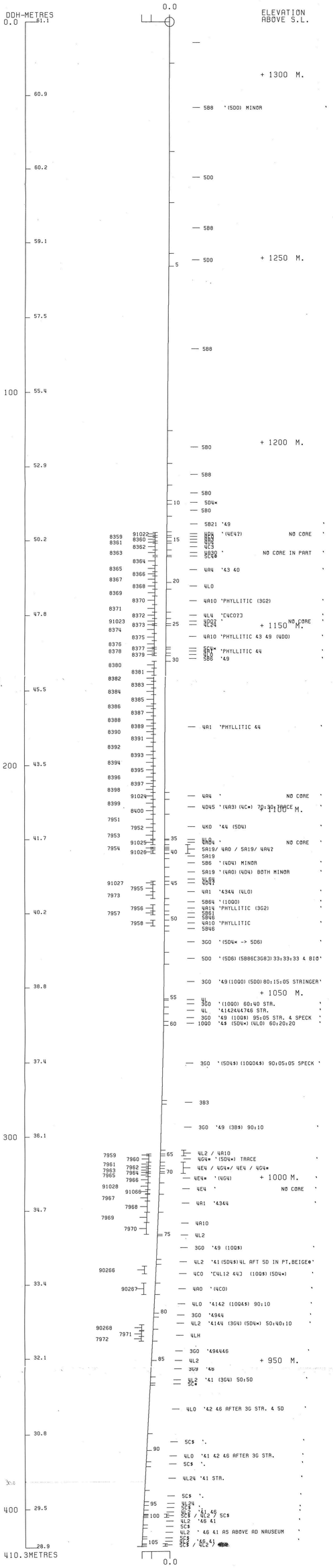

DDH: FAGA069 -- 42 DEGREE PROFILE

(VIEW AZIMUTH = 312 DEGREES)

ELEV:1303 592206E ; 905159N

PLUNGE ANGLE IS 11.0 TREND ANGLE IS 312.0

CORRECTED COLLAR POSITION: X = 556.6 Z = 1314.4

SECTION NAME: 78W

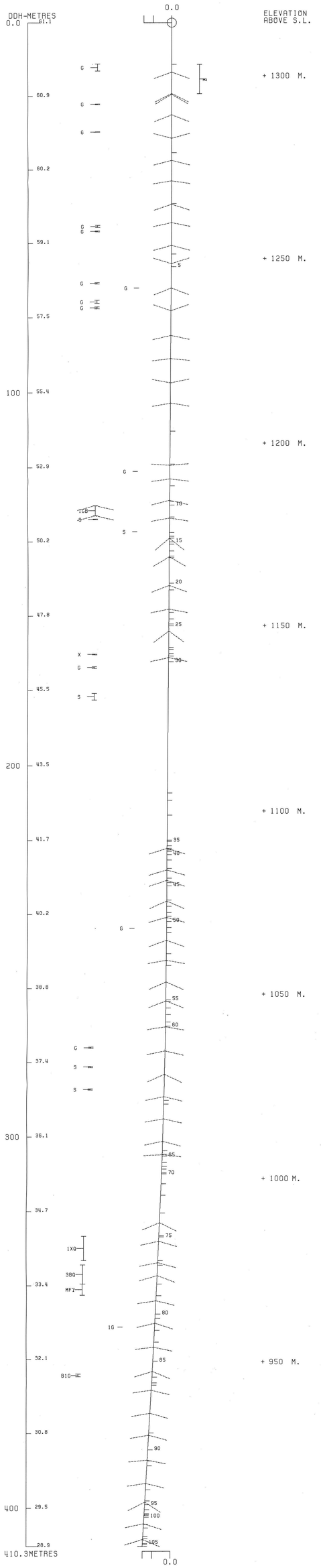

CYPRUS ANVIL MINING CORPORATION
PROGRAM DH161 19 MAR 1985 4:14 PM

FAGA075

DRILL HOLE : FAGA075
NORTHING : 905,208.1
EASTING : 592,328.4
ELEVATION : 1,301.2
TOTAL DEPTH : 347.8
SECTION : W 78
R.F.E. : S2
RFE DIRECTION: 230
PLUNGE ANGLE : 11
PLUNGE DIRECT: 312
DHD CALC: 1
SS CALC: 1

DETAIL RECORD COUNTS:

NOS ORE-SAMPLES:	59
NOS DOWN-H-SURVEYS:	6
NOS DOWN-H-LITHOLOGY:	158
NOS DOWN-H-STRUCTURE:	51
NOS DOWN-H-FAULTS:	37
NOS DOWN-H-SPLINES:	6
NOS COMPOSITES:	0

DDH: FAGA075 UTM-N: 905,208.1 UTM-E: 592,328.4 UTM-ELEV: 1,301.2 TOTAL DEPTH: 347.8 SECTION: W 78
RFE: S2 RFE DIR: 230 PLUNGE ANGLES: 11 312 DHD CALC: 1 SS CALC: 1

DEPTHS FROM	DEPTHS TO	SAMPLE NO.	INT.	REC.	ROCK UNIT	ASSAYS S.G. PULP	CU %	PB %	ZN %	AG(AA) G/MT	AG(FA) G/MT	AU(FA) G/MT	PO %	PY %	TOT FE	BAO %	HG %	MN %	AS %	BA %	S.G. W.R.
26.2	27.7	90462	1.5	1.5	4A4			2.27	5.58	40.39											
27.7	29.0	90463	1.3	1.3	4A4			1.60	3.83	26.10											
29.0	30.5	90464	1.5	1.5	4A4			1.99	4.01	31.19											
30.5	32.6	90465	2.1	2.1	4A4			1.85	3.89	30.19											
32.6	35.1	90466	2.5	2.5	4AL			1.23	3.29	15.09											
35.1	36.0	90467	.9	.9	4L14			2.20	3.47	34.29											
36.0	37.5	90468	1.5	1.5	4L14			2.35	4.32	31.19											
37.5	39.0	90469	1.5	1.5	4L14			1.64	3.06	24.30											
39.0	40.8	90470	1.8	1.8	4A4			1.23	4.59	18.19											
40.8	42.1	90471	1.3	1.3	4A4			2.18	5.87	31.19											
42.1	43.6	90472	1.5	1.5	4A0			1.47	3.47	24.30											
43.6	44.8	90473	1.2	1.2	4A4			1.62	3.77	24.30											
44.8	45.9	90474	1.1	1.1	4A4			2.20	5.75	39.39											
45.9	47.2	90475	1.3	1.3	5D4@			.34	1.89	6.20											
47.2	48.8	90476	1.6	1.6	4AD			3.29	5.21	50.39											
48.8	50.4	90477	1.6	1.6	4C0			.28	.95	5.09											
50.4	51.5	90478	1.1	1.1	4D0			2.93	5.87	45.29											
53.6	56.7	90479	3.1	3.1	4A0			1.60	1.95	21.30											
56.7	58.8	90480	2.1	2.1	4A0			1.47	3.35	22.30											
58.8	59.6	90481	.8	.8	4A4			1.92	4.50	34.29											
59.6	61.3	90482	1.7	1.7	4A4			3.89	9.08	64.50											
61.3	62.8	90483	1.5	1.5	4A4			3.14	5.16	43.20											
62.8	64.9	90484	2.1	2.1	4A4			4.34	6.36	57.60											
64.9	67.7	90485	2.8	2.8	4A4			1.94	3.29	30.19											
68.4	69.8	90486	1.4	1.4	4L41			2.85	4.50	37.39											
69.8	71.6	90487	1.8	1.8	4AL			2.12	3.95	35.29											
71.6	72.8	90488	1.2	1.2	4L41			1.39	3.54	20.19											
72.8	73.9	90489	1.1	1.1	4L41			2.43	5.40	35.29											
75.1	75.9	90490	.8	.8	4L41			1.44	4.74	20.19											
75.9	77.4	90491	1.5	1.5	4L41			3.60	10.82	50.39											
77.4	78.9	90492	1.5	1.2	4L41			3.60	7.08	60.20											
78.9	80.5	90493	1.6	1.5	4L41			3.45	5.63	51.39											
80.5	82.1	90494	1.6	1.6	4A41			4.05	7.08	56.60											
82.1	84.1	90495	2.0	2.0	5D4@			.69	2.58	9.90											
84.1	85.8	90496	1.7	1.7	4A4			4.42	7.67	60.29											
85.8	87.8	90497	2.0	2.0	4A4			2.33	4.44	34.29											
87.8	89.1	90498	1.3	1.3	4L14			3.52	6.48	47.29											
89.1	90.8	90499	1.7	1.7	4L14			4.99	8.76	70.59											
90.8	91.9	90500	1.1	1.1	4L14			3.68	7.79	48.29											
92.3	93.9	90501	1.6	1.6	4A4			1.62	3.60	24.30											
93.9	96.3	90502	2.4	2.4	4A0			1.10	3.12	15.09											
96.3	97.8	90503	1.5	1.5	4A4			2.25	7.08	34.29											
97.8	99.1	90504	1.3	1.3	4D0			3.22	6.71	40.39											
99.1	100.3	90505	1.2	1.2	4L14			3.97	6.59	52.39											
100.3	103.3	90506	3.0	3.0	4A4			6.08	14.42	80.59											
103.3	104.7	90507	1.4	1.4	4A43			3.22	8.97	53.50											
104.7	106.2	90508	1.5	1.5	4A43			2.37	5.33	35.29											

DDH: FAGA075 UTM-N: 905,208.1 UTM-E: 592,328.4 UTM-ELEV: 1,301.2 TOTAL DEPTH: 347.8 SECTION: W 78
RFE: S2 RFE DIR: 230 PLUNGE ANGLES: 11 312 DHD CALC: 1 SS CALC: 1

DEPTHS FROM	DEPTHS TO	SAMPLE NO.	INT.	REC.	ROCK UNIT	ASSAYS S.G. PULP	CU %	PB %	ZN %	AG(AA) G/MT	AG(FA) G/MT	AU(FA) G/MT	PO %	PY %	TOT FE	BAO %	HG %	MN %	AS %	BA %	S.G. W.R.
106.2	107.7	90509	1.5	1.5	4A43			4.95	6.36	59.29											
107.7	108.7	90510	1.0	1.0	4A43			2.85	5.63	45.29											
109.1	110.9	90511	1.8	1.8	4A4			3.08	5.87	40.39											
245.0	246.5	90512	1.5	1.5	4E4			12.75	9.23	171.40											
249.0	250.6	90513	1.6	1.6	4K4			6.67	5.16	78.50											
250.6	252.2	90514	1.6	1.6	4AK			6.08	4.20	67.50											
253.0	253.6	90515	.6	.6	4AD			4.13	10.89	59.70											
253.6	254.7	90516	1.1	1.1	4G4			3.89	7.44	57.60											
259.4	261.4	90517	2.0	2.0	4G4			5.40	10.50	81.59											
261.4	262.5	90518	1.1	1.1	4AG			4.50	8.23	67.50											
262.8	264.3	90519	1.5	1.5	4G4			4.79	7.62	70.59											
264.3	264.9	90520	.6	.6	4G4			5.09	8.56	74.70											
WEIGHTED AVERAGE																					
26.2	51.5			25.3	25.3			1.75	3.98	27.09											
53.6	67.7			14.1	14.1			2.52	4.43	36.89											
68.4	73.9			5.5	5.5			2.21	4.29	32.53											
75.1	91.9			16.8	16.4			3.25	6.54	46.45											
92.3	108.7			16.4	16.4			3.30	7.28	45.47											
109.1	110.9			1.8	1.8			3.08	5.87	40.39											
245.0	246.5			1.5	1.5			12.75	9.23	171.40											
249.0	252.2			3.2	3.2			6.37	4.68	73.00											
253.0	254.7			1.7	1.7			3.98	8.65	58.34											
259.4	262.5			3.1	3.1			5.08	9.69	76.59											
262.8	264.9			2.1	2.1			4.88	7.88	71.77											

DDH: FAGA075 UTM-N: 905,208.1 UTM-E: 592,328.4 UTM-ELEV: 1,301.2 TOTAL DEPTH: 347.8 SECTION: W 78
RFE: S2 RFE DIR: 230 PLUNGE ANGLES: 11 312 DHD CALC: 1 SS CALC: 1

DEPTH	ZENITH	AZIMUTH
0.000	180.000	0.000
61.600	178.000	280.500
134.700	177.000	70.200
201.800	175.000	14.000
262.700	173.000	37.500
323.700	170.000	81.500

DDH: FAGA075 UTM-N: 905,208.1 UTM-E: 592,328.4 UTM-ELEV: 1,301.2 TOTAL DEPTH: 347.8 SECTION: W 78
RFE: S2 RFE DIR: 230 PLUNGE ANGLES: 11 312 DHD CALC: 1 SS CALC: 1

DEPTH	UNIT	CODE	DESC		RECOVERY	IND
26.2	0001	#			0.5-	1
31.4	0002	4A4			0.5-	1
35.1	0003	4L1	(4AO)		0.5-	1
39.0	0004	4L14			0.5-	1
39.6	0005	5D4@			0.5-	1
40.8	0006	4A4	(4L1)		0.5-	1
45.1	0007	4A4	(4A3) MINOR		0.5-	1
45.9	0008	4A4	(4LO)		0.5-	1
46.3	0009	4L1	(5D4@)		0.5-	1
46.6	0010	5D4@			0.5-	1
47.0	0011	4AO	(10QO)		0.5-	1
47.2	0012	5D4@			0.5-	1
49.7	0013	4DO	(4A4)		0.5-	1
51.7	0014	4CC	(4DO)	NO CORE	0.5-	1
53.6	0015	5D4@			0.5-	1
56.1	0016	4AO			0.5-	1
56.4	0017	4L42			0.5-	1
67.8	0018	4A4	(4AO) MINOR	SOME NO CORE	0.5-	1
68.4	0019	5D4@			0.5-	1
69.2	0020	4L41			0.5-	1
70.5	0021	4A41	PHYLLITIC		0.5-	1
73.9	0022	4L41			0.5-	1
75.1	0023	5D4$	#		0.5-	1
80.2	0024	4L41		SOME NO CORE	0.5-	1
82.1	0025	4A41	PHYLLITIC		0.5-	1
83.5	0026	5D4@			0.5-	1
83.8	0027	4L41			0.5-	1
84.1	0028	5D4@			0.5-	1
87.2	0029	4A4			0.5-	1
87.4	0030	5D4@			0.5-	1
91.9	0031	4L14	->4DO PHYLLITIC	SOME NO CORE	0.5-	1
92.3	0032	5D4$			0.5-	1
96.0	0033	4AO	(4A4)		0.5-	1
96.3	0034	4LO	GOUGE		0.5-	1
97.9	0035	4A4			0.5-	1
98.9	0036	4DC	PHYLLITIC [4L14]		0.5-	1
99.1	0037	5D4@			0.5-	1
100.3	0038	4L14			0.5-	1
103.3	0039	4A4		NO CORE	0.5-	1
108.7	0040	4A43			0.5-	1
109.1	0041	5D4@			0.5-	1
110.9	0042	4A4	(4LO) MINOR		0.5-	1
111.8	0043	5D4@			0.5-	1
112.5	0044	5A1@			0.5-	1
113.1	0045	5A1@	(5D4@) 50:50		0.5-	1
114.8	0046	5B62			0.5-	1
115.1	0047	5D4@			0.5-	1
115.2	0048	4AO			0.5-	1
115.7	0049	5D4@			0.5-	1
117.4	0050	5B6			0.5-	1
120.4	0051	10QO	(5D4*) (4AO) 40:10:50		0.5-	1

DDH: FAGA075 UTM-N: 905,208.1 UTM-E: 592,328.4 UTM-ELEV: 1,301.2 TOTAL DEPTH: 347.8 SECTION: W 78
RFE: S2 RFE DIR: 230 PLUNGE ANGLES: 11 312 DHD CALC: 1 SS CALC: 1

DEPTH	UNIT	CODE	DESC	RECOVERY	IND
127.5	0052	5B0		0.5-	1
137.6	0053	5B$		0.5-	1
139.6	0054	5D0	(5D$)	0.5-	1
140.5	0055	5B0	8 WEAK	0.5-	1
141.2	0056	5D0		0.5-	1
142.5	0057	5B83		0.5-	1
146.0	0058	5D0		0.5-	1
152.0	0059	5D$		0.5-	1
153.1	0060	5B62	->5B628$	0.5-	1
153.7	0061	5D$		0.5-	1
154.6	0062	5B62	->5B628	0.5-	1
155.2	0063	5A6		0.5-	1
157.0	0064	5B62	->5B628 (5A6)	0.5-	1
160.4	0065	5D0	(4L1&6)	0.5-	1
163.5	0066	5D6		0.5-	1
164.5	0067	5DC		0.5-	1
165.2	0068	4A0	(5A19)	0.5-	1
165.6	0069	5D0		0.5-	1
166.7	0070	4A0	(5A19)	0.5-	1
171.7	0071	5D0	(5A1) V. MINOR	0.5-	1
172.1	0072	5A16		0.5-	1
172.8	0073	5D$		0.5-	1
173.4	0074	5A6		0.5-	1
174.0	0075	5D$		0.5-	1
174.3	0076	5A0		0.5-	1
175.0	0077	5D$		0.5-	1
176.5	0078	5A0		0.5-	1
178.2	0079	5D$		0.5-	1
181.7	0080	5A6		0.5-	1
184.2	0081	5A3		0.5-	1
184.6	0082	5DC		0.5-	1
185.6	0083	5A16	(5B621)	0.5-	1
186.1	0084	5D$	(5D0)	0.5-	1
186.7	0085	5A61	(5A619 ->4A0)	0.5-	1
187.1	0086	5D$	(5D0)	0.5-	1
187.3	0087	5A61		0.5-	1
187.5	0088	4L1		0.5-	1
188.8	0089	5DC	(5D$)	0.5-	1
189.9	0090	5A16		0.5-	1
191.4	0091	5D0	(5D$)	0.5-	1
196.0	0092	5D$	(5B68) (5B6)	0.5-	1
210.2	0093	5B0	-> 5B283	0.5-	1
211.7	0094	5B72		0.5-	1
213.8	0095	5B20		0.5-	1
214.3	0096	5D3		0.5-	1
214.7	0097	5B3		0.5-	1
215.3	0098	5B72		0.5-	1
215.7	0099	5B0		0.5-	1
215.8	0100	5DC		0.5-	1
216.0	0101	5B0		0.5-	1
226.2	0102	5D0	(5B83) (5B0)	0.5-	1

DDH: FAGA075 UTM-N: 905,208.1 UTM-E: 592,328.4 UTM-ELEV: 1,301.2 TOTAL DEPTH: 347.8 SECTION: W 78
RFE: S2 RFE DIR: 230 PLUNGE ANGLES: 11 312 DHD CALC: 1 SS CALC: 1

DEPTH	UNIT	CODE	DESC		RECOVERY	IND
226.9	0103	5D@4			0.5-	1
230.9	0104	5B$2			0.5-	1
234.5	0105	5A6			0.5-	1
234.9	0106	5B61			0.5-	1
235.1	0107	5A6			0.5-	1
235.6	0108	5D4$			0.5-	1
238.0	0109	5A6			0.5-	1
238.8	0110	5A$			0.5-	1
239.1	0111	4LO			0.5-	1
239.6	0112	5A6			0.5-	1
240.6	0113	4L1			0.5-	1
241.0	0114	5D4$			0.5-	1
241.9	0115	5B62	(10QO$)		0.5-	1
243.4	0116	4LO			0.5-	1
245.1	0117	5D4@			0.5-	1
246.6	0118	4E4			0.5-	1
247.7	0119	4LO	(4L4)		0.5-	1
247.9	0120	5D4@			0.5-	1
248.3	0121	5B62	[5A64]		0.5-	1
248.4	0122	5D4@			0.5-	1
248.9	0123	5B62			0.5-	1
249.0	0124	5D4@			0.5-	1
251.5	0125	4K4			0.5-	1
252.2	0126	4AO			0.5-	1
253.3	0127	4DO	PHYLLITIC -> 4L14		0.5-	1
253.6	0128	4A4		NO CORE	0.5-	1
254.5	0129	4G4			0.5-	1
254.8	0130	4LO	(4L2) V. MINOR		0.5-	1
259.2	0131	5B62			0.5-	1
259.9	0132	4L2			0.5-	1
261.4	0133	4G4		NO CORE	0.5-	1
261.8	0134	4G4$	[4K461]		0.5-	1
262.4	0135	4A4			0.5-	1
262.9	0136	5D4@			0.5-	1
263.1	0137	5B62	-> 5B621		0.5-	1
264.7	0138	4G4	(4K4)		0.5-	1
267.1	0139	4LO	(4L4)		0.5-	1
279.0	0140	5B62	(5B628)		0.5-	1
280.1	0141	4LO			0.5-	1
288.0	0142	5B62	(5B628)		0.5-	1
292.7	0143	4L6	(4LO)		0.5-	1
297.6	0144	4LO	(4L2) (4L6)		0.5-	1
301.8	0145	4LO	5B6 PROTOLITH		0.5-	1
302.5	0146	5B6	(4LO)		0.5-	1
304.0	0147	5B6	&@ MINOR		0.5-	1
304.7	0148	4L12			0.5-	1
307.1	0149	5B6			0.5-	1
308.0	0150	4L2	(5B64)		0.5-	1
308.9	0151	5B6			0.5-	1
310.5	0152	5B64			0.5-	1
313.3	0153	4L2	(5B64)		0.5-	1

DDH: FAGA075 UTM-N: 905,208.1 UTM-E: 592,328.4 UTM-ELEV: 1,301.2 TOTAL DEPTH: 347.8 SECTION: W 78
RFE: S2 RFE DIR: 230 PLUNGE ANGLES: 11 312 DHD CALC: 1 SS CALC: 1

DEPTH	UNIT	CODE	DESC	RECOVERY	IND
316.4	0154	4LO	(4L2)	0.5-	1
316.8	0155	5B61		0.5-	1
320.2	0156	5B6		0.5-	1
323.4	0157	4LC		0.5-	1
347.8	0158	4LO	(4L6) (4L2)	0.5-	1

DDH: FAGA075 UTM-N: 905,208.1 UTM-E: 592,328.4 UTM-ELEV: 1,301.2 TOTAL DEPTH: 347.8 SECTION: W 78
RFE: S2 RFE DIR: 230 PLUNGE ANGLES: 11 312 DHD CALC: 1 SS CALC: 1

DDH	F DEPTH	T DEPTH	FEAT	SYMTRY	S0 ANGLE	S0 DIRECT	S1 ANGLE	S1 DIRECT	S2 ANGLE	S2 DIRECT	RFE CDE	DHDC	SDC	PROCESS
FAGA075	0.0	30.5	PS2		0	0	0	0	30	230	0	1	1	1
FAGA075	0.0	39.0	PS2		0	0	0	0	55	230	0	1	1	1
FAGA075	0.0	44.8	PS2		0	0	0	0	50	230	0	1	1	1
FAGA075	0.0	48.2	PS2		0	0	0	0	40	230	0	1	1	1
FAGA075	0.0	53.0	PS2		0	0	0	0	45	230	0	1	1	1
FAGA075	0.0	59.1	CS2	S	0	0	10	0	45	230	0	1	1	1
FAGA075	0.0	61.5	CS2	S	0	0	40	0	60	230	0	1	1	1
FAGA075	0.0	70.0	CS2	Z	0	0	50	180	50	230	0	1	1	1
FAGA075	0.0	74.1	PS2		0	0	0	0	80	230	0	1	1	1
FAGA075	0.0	79.1	PS2		0	0	0	0	70	230	0	1	1	1
FAGA075	0.0	80.3	CS2	Z	0	0	50	180	60	230	0	1	1	1
FAGA075	0.0	91.4	PS2		0	0	0	0	60	230	0	1	1	1
FAGA075	0.0	92.7	CS2	Z	0	0	15	180	75	230	0	1	1	1
FAGA075	0.0	97.5	CS2	D	0	0	0	0	75	230	0	1	1	1
FAGA075	0.0	107.3	CS2	S	0	0	40	0	70	230	0	1	1	1
FAGA075	0.0	110.6	CS2	S	0	0	15	0	75	230	0	1	1	1
FAGA075	0.0	115.2	CS2	Z	0	0	55	180	75	230	0	1	1	1
FAGA075	0.0	128.6	CS2	Z	0	0	50	180	70	230	0	1	1	1
FAGA075	0.0	131.2	CS2	Z	0	0	50	180	75	230	0	1	1	1
FAGA075	0.0	133.7	CS2	S	0	0	25	0	70	230	0	1	1	1
FAGA075	0.0	138.3	PS2		0	0	0	0	70	230	0	1	1	1
FAGA075	0.0	141.9	CS2	D	0	0	0	0	70	230	0	1	1	1
FAGA075	0.0	149.8	CS2	S	0	0	55	0	75	230	0	1	1	1
FAGA075	0.0	155.4	CS2	S	0	0	40	0	70	230	0	1	1	1
FAGA075	0.0	166.6	CS2	D	0	0	0	0	80	230	0	1	1	1
FAGA075	0.0	171.9	CS2	Z	0	0	30	180	80	230	0	1	1	1
FAGA075	0.0	181.7	CS2	Z	0	0	45	180	70	230	0	1	1	1
FAGA075	0.0	185.3	CS2	Z	0	0	20	180	75	230	0	1	1	1
FAGA075	0.0	189.7	CS2	S	0	0	25	0	75	230	0	1	1	1
FAGA075	0.0	196.0	CS2	Z	0	0	60	180	75	230	0	1	1	1
FAGA075	0.0	203.7	CS2	Z	0	0	50	180	75	230	0	1	1	1
FAGA075	0.0	211.1	CS2	S	0	0	40	0	75	230	0	1	1	1
FAGA075	0.0	217.9	CS2	Z	0	0	35	180	70	230	0	1	1	1
FAGA075	0.0	225.7	CS2	Z	0	0	45	180	70	230	0	1	1	1
FAGA075	0.0	232.6	CS2	Z	0	0	50	180	70	230	0	1	1	1
FAGA075	0.0	240.0	CS2	S	0	0	20	0	40	230	0	1	1	1
FAGA075	0.0	248.1	PS2		0	0	0	0	70	230	0	1	1	1
FAGA075	0.0	256.3	CS2	S	0	0	20	0	60	230	0	1	1	1
FAGA075	0.0	262.6	CS2	Z	0	0	20	180	80	230	0	1	1	1
FAGA075	0.0	267.9	CS2	Z	0	0	45	180	75	230	0	1	1	1
FAGA075	0.0	275.1	CS2	Z	0	0	40	180	75	230	0	1	1	1
FAGA075	0.0	280.4	CS2	Z	0	0	45	180	65	230	0	1	1	1
FAGA075	0.0	287.3	CS2	Z	0	0	25	180	70	230	0	1	1	1
FAGA075	0.0	294.4	CS2	Z	0	0	45	180	75	230	0	1	1	1
FAGA075	0.0	301.8	CS2	Z	0	0	40	180	80	230	0	1	1	1
FAGA075	0.0	308.0	CS2	D	0	0	0	0	60	230	0	1	1	1
FAGA075	0.0	311.4	CS2	Z	0	0	35	180	70	230	0	1	1	1
FAGA075	0.0	325.8	CS2	Z	0	0	20	180	80	230	0	1	1	1
FAGA075	0.0	333.8	PS2		0	0	0	0	70	230	0	1	1	1
FAGA075	0.0	339.5	CS2	Z	0	0	45	180	75	230	0	1	1	1
FAGA075	0.0	345.9	CS2		0	0	0	0	90	230	0	1	1	1

DDH: FAGA075 UTM-N: 905,208.1 UTM-E: 592,328.4 UTM-ELEV: 1,301.2 TOTAL DEPTH: 347.8 SECTION: W 78
RFE: S2 RFE DIR: 230 PLUNGE ANGLES: 11 312 DHD CALC: 1 SS CALC: 1

DDH	F DEPTH	T DEPTH	FEAT	REC	CD	PARLL	UPPER PLANE		INTERNAL PLANE		LOWER PLANE		DHD
FAGA075	26.2	31.3		8			0	0	0	0	0	0	1
FAGA075	31.3	35.0	R	0			0	0	0	0	0	0	1
FAGA075	35.0	39.0	X	5			0	0	0	0	0	0	1
FAGA075	39.0	40.2		2			0	0	0	0	0	0	1
FAGA075	40.2	40.8	R				0	0	0	0	0	0	1
FAGA075	45.1	45.8	X				0	0	0	0	0	0	1
FAGA075	45.8	46.3	B				0	0	0	0	0	0	1
FAGA075	46.6	47.0	B				0	0	0	0	0	0	1
FAGA075	47.2	49.6	R	3			0	0	0	0	0	0	1
FAGA075	0.0	49.6	G				0	0	0	0	0	0	1
FAGA075	49.6	51.6	NNN				0	0	0	0	0	0	1
FAGA075	53.6	56.0	R	2			0	0	0	0	0	0	1
FAGA075	56.3	67.7	NNN				0	0	0	0	0	0	1
FAGA075	75.0	80.1	NNN				0	0	0	0	0	0	1
FAGA075	89.3	90.8	NNN				0	0	0	0	0	0	1
FAGA075	96.0	96.3	G				0	0	0	0	0	0	1
FAGA075	99.0	100.2	BR	5			0	0	0	0	0	0	1
FAGA075	100.2	103.3	NNN				0	0	0	0	0	0	1
FAGA075	103.3	103.3	R				0	0	0	0	0	0	1
FAGA075	0.0	117.4	G				0	0	0	0	0	0	1
FAGA075	103.3	103.3	R				0	0	0	0	0	0	1
FAGA075	0.0	117.4	G				0	0	0	0	0	0	1
FAGA075	0.0	120.3	G				0	0	99	999	0	0	1
FAGA075	119.3	127.5	GPB				0	0	0	0	99	999	1
FAGA075	136.6	136.7	G				0	0	99	999	0	0	1
FAGA075	180.4	180.5	G				0	0	0	0	0	0	1
FAGA075	230.9	231.0	G				0	0	99	999	0	0	1
FAGA075	235.0	235.3	G				0	0	0	0	0	0	1
FAGA075	238.0	238.7	Q				0	0	0	0	0	0	1
FAGA075	239.1	239.5	GB				0	0	0	0	0	0	1
FAGA075	0.0	244.7	G				0	0	99	999	0	0	1
FAGA075	243.3	245.0	P				0	0	0	0	0	0	1
FAGA075	253.2	253.5	NNN				0	0	0	0	0	0	1
FAGA075	259.9	261.3	NNN				0	0	0	0	0	0	1
FAGA075	301.7	302.5	G				99	999	0	0	0	0	1
FAGA075	304.7	307.1	BG				0	0	0	0	0	0	1
FAGA075	313.3	316.3	P				0	0	0	0	0	0	1
FAGA075	316.3	316.7	SB				0	0	0	0	0	0	1
FAGA075	320.1	323.3	GBR				0	0	0	0	0	0	1

DDH: FAGA075 UTM-N: 905,208.1 UTM-E: 592,328.4 UTM-ELEV: 1,301.2 TOTAL DEPTH: 347.8 SECTION: W 78
RFE: S2 RFE DIR: 230 PLUNGE ANGLES: 11 312 DHD CALC: 1 SS CALC: 1

DDH	SEGMENT NOS	COND INDICATOR
FAGA075	1	2
FAGA075	2	2
FAGA075	3	2
FAGA075	4	2
FAGA075	5	2
FAGA075	6	1

CYPRUS ANVIL MINING CORPORATION

DIAMOND DRILL CORE LOG

Hole Number: FAGA 075

Project: GRUM RELOG

Location: 78 W.

Claim: _____

U.T.M.
~~Terr.~~ ~~Plane~~
Co-ords.: 905208.0 N (905208.1 round-off)

592328.0 E (592328.4 round-off)

Grid
Co-ords.: _____

_____

Elevation: 1301.2 m.

Total Depth: 1141 ft. 347.78

Fabric Orientation Diagram:

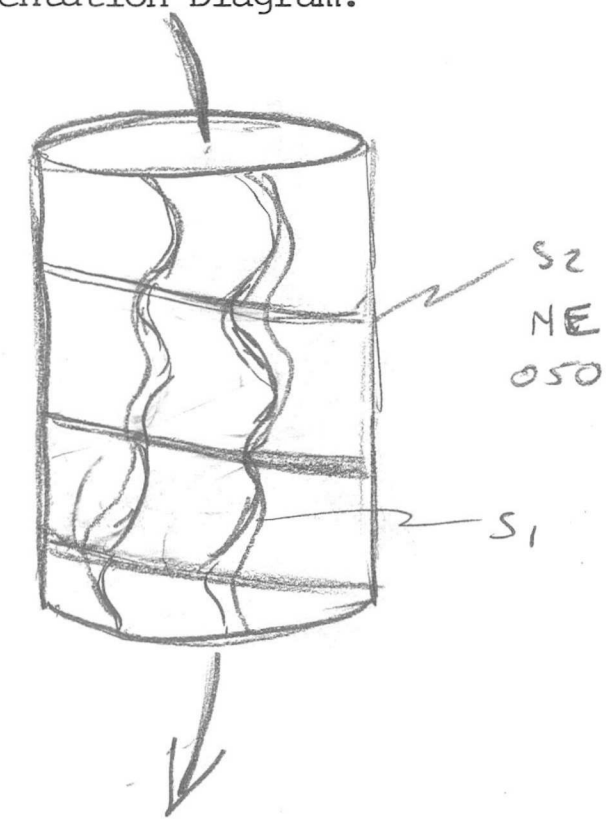

All symmetry determinations looking

NW with S2 dipping

NE with dip azimuth 050.

Purpose: GRUM DEPOSIT U/G DRILLING.

Logged by: DSJ - JGS Date(s) Logged: 19 SEPT 81

Drilling
Contractor: Cam - McCutch.

Core:	Size	From	To
	BQ	0	1141'

Collar Cased and Capped: ____

Started: 12 MAY 75 Completed: 21 MAY 75

Cyprus Anvil Mining Corp.

DDH FAGA075 (2 / 8)

Diamond Drill Core Log Date: 19SEP81 Logged By: DSF - JGS

Code	Drillhole	Elevation	Northing	Easting	Units (feet/metres)	R.F.E.	
	2 8	10 16	17 24	25 32	34 39	41 42	
T	FAGA075	1391.2	9052081.1	592328.4	FEET	S2	

Code	Drillhole	Depth	Zenith Angle	True Azimuth	Comments
	2 8	10 14	22 26	28 32	34 56
R	FAGA075	0	180.0	0.0	AT COLLAR
R	FAGA075	202	178.0	289.5	TROPARI MAG
R	FAGA075	442	177.0	70.2	
R	FAGA075	662	175.0	114.0	
R	FAGA075	862	173.0	37.5	
R	FAGA075	1062	170.0	81.5	

Code	Drillhole	Comments, Errant Remarks, Snivellings and / or Lewd Suggestions
	2 8	10 56

DDH FAGA075 (2 Feet 8)

Cyprus Anvil Mining Corp.

Lithologic Log

Date: 16Sept81 Logged By: DSF

Code	From	To	Recov.	No.	Unit	Description
1	10 14	16 20	22 24	26 28	30 34	35
L	0	860		1	#	O/B (from KA log)
L	860	1030		2	4AH	thinly laminated; ≈ 14' recd over 17'
L	1030	1151		3	4L1	(4AO); rubble only; < 1' recd over 12'
						suspected fault zone
L	1151	1281		4	4L14	in part brecciated; 7' recd.
L	1281	1300		5	5D4*	ankeritic; 2% fuchsite; approx. only as
						< 1' recd 128-132, half this interval = 504*
L	1300	1340		6	4A4 (4L1)	(4L1); rubble & ground core only - fault??
L	1340	1480		7	4AH	(4A3) minor
L	1480	1505		8	4AH	(4LO) brecciated & replaced
L	1505	1520		9	4L1	(504*) SHIT; broken, blocky
L	1520	1530		10	5DH*	ankeritic 1-2% fuchsite
L	1530	1542		11	4AO	(000) broken, blocky crap
L	1542	1550		12	5D4*	ankeritic
L	1550	1630		13	4DO	(4AC) ; rubbly garbagy core; < 3' recd.
						mud seam reported (KA) @ 163' - fault?
L	1630	1695		14	4CD	?? no core in box, sampled by KA;
						only a few fragments of 4D near 163'
						yet interval described by KA as "wkly
						mineralized phyllite" & mineralized qtz-ser-
						phyll - 8-10% sulfs; < 3.5% comb. over int
L	1695	1760		15	5D4*	ankeritic; excellent example showing
						carbonation alteration of good recognizable
						5D3; > 5% fuchsite
L	1760	1840		16	4AO	< 2' recd.; ground rubbly core
L	1840	1850		17	4L4 2	
L	1850	2224		18	4AH	all high grade sections taken by KA
L	2224	2245		19	5D4*	ankeritic; 2-5% fuchsite
L	2245	2270		20	4L4 1	> 6% comb
L	2270	2314		21	4A4 1	phyllitic
L	2314	2426		22	4L41	as #20; > 5% over interval
L	2426	2463		23	5DH*	calcite & dolomite; c.f. #15 again is excellent
						example of 500 carbonated preferentially
						toward upper and lower contacts w/ weak
						fuchsite development in carbonated margins
L	2463	2630		24	4L41	according to KA log & remaining core

DDH FAG 4075 (2–8)

Cyprus Anvil Mining Corp.

Lithologic Log

Date: 16 Sept. 81 Logged By: JST

Code	From	To	Recov.	No.	Unit	Description
1	10–14	16–20	22–24	26–28	30–34	35
L	2630	2693		25	4AA41	phyllitic ; presence of this unit
						(treated as 4L41 by KA) suggests following
						might be more accurate
						246.3-249.0 - 4L41
						249.0-259.0 - 4AA41
						259.0-263.0 - 4L41
						263.0-269.3 - 4AA41 phyllitic
L	2693	2738		26	5DH*	ankeritic
L	2738	2748		27	4L41	
L	2748	2760		28	5DH*	ankeritic
L	2760	2862		30	4AA4	
L	2862	2868		31	5D4*	ankeritic
L	2868	3014		37	4L14	⇒ 4DO phyllitic ; interval 293-298
						messing — could be 4AA4??
L	3011	3029		33	5D4*	dolomitic
L	3029	3150		34	4AO	(4AA4)
L	3150	3160		36	4LO	gouge ; no alts. poss.
L	3160	3212		37	4AA4	
L	3212	3245		38	4DO	phyllitic ; [4L14]
L	3245	3251		39	5DH*	ankeritic
L	3251	3290		40	4L14	broken ground & rubbly core ; <2' rec^d.
						poss. fault
L	3290	3390		41	4AA4	no core ; taken by KA ; 4AA4 from KA log
L	3390	3564		42	4AA43	core present ; 0.2' rubbly core zone 339.0-
						339.2 poss. fault zone ; .3' 4LO @ 351' ;
						0.6' 4L4 353.3-353.9
L	3546	3581		43	5D4*	ankeritic ; ≈ 1% fuchsite
L	3581	3640		44	4AA4	minor 4LO 359.5-339.9' & 363.0-363.4
L	3640	3667		45	5D4*	ankeritic ; no fuchsite but texture &
						relict CO_3 bands of 5D
L	3667	3690		46	5A1*	ankeritic, there are fuchsite in 5A1
L	3690	3710		47	5A1*	" (5D4* ank) ; 50:50 interbanded
L	3710	3768		48	5BG2	
L	3768	3775		49	5D4*	ankeritic
L	3775	3780		50	4AO	
L	3780	3795		51	5D4*	"

DDH FAGA075 (2–8)

Cyprus Anvil Mining Corp.

Lithologic Log

Date: 17 Sept 81 Logged By: [signature]

Code	From	To	Recov.	No.	Unit	Description
1	10–14	16–20	22–24	26–28	30–34	35
L	3795	3853		52	5BG	
L	3853	3950		53	QQO	(5D4*) (4AO); gouge @ top & base of
						interval, upper contact indeterminate, lower
						11S2; unit 50% 4AO, 40% QQO 10% 5D
L	3950	4184	10.5	54	5BO	gouge & broken core, major fault zone
						lower contact ≈ 11S2; upper contact indeterminate
						actual gouge zone is 391.7–418.4; poor recy
L	4184	4515		55	5B*	dolomitic; [5BO FeMg CO3]; gouge 11S2 448.3 to 448.81
L	4515	4580		56	5DO	(5D* dolomitic)
L	4580	4610		57	5BO	wkly chloritic not true 5B8/5B7
L	4610	4633		58	5DO	
L	4633	4674		59	5B83	
L	4674	4790		60	5DO	
L	4790	4986		61	5D*	dolomitic; heavily carbonated & chlor mottled
						approaching "leopard" spotted appearance
						looks more like carbonated 5D than 5C
L	4986	5023		62	5B62	→ 5B628* wkly chloritic & dolomitic
L	5023	5042		63	5D*	dolomitic
L	5042	5072		64	5B62	→ 5B628
L	5072	5093		65	5A6	
L	5093	5152		66	5B62	→ 5B628 (5A6)
L	5152	5263		67	5DO	w/ interbanded 4L1(6) 517.0–517.9 & 518.2–518.8
L	5263	5364		68	5DG	
L	5364	5397		69	5DO	
L	5397	5420		70	4AO	(5A19)
L	5420	5432		71	5DO	
L	5432	5470		72	4AO	(5A19)
L	5470	5634		73	5DO	(5A1) v. minor
L	5634	5647		74	5A16	
L	5647	5670		75	5D*	dolomitic
L	5670	5690	1.0	76	5AG	
L	5690	5708		77	5D*	dolomitic
L	5708	5720		78	5AO	wkly calc.
L	5720	5743		79	5D*	dolomitic
L	5743	5790		80	5AO	wkly & patchily calc.
L	5790	5846	2.0	81	5D*	dolomitic

DDH FAGA075 (2–8)

Cyprus Anvil Mining Corp.

Lithologic Log

Date: 17 Sept 81 Logged By: DSJ

Code	From	To	Recov.	No.	Unit	Description
1	10–14	16–20	22–24	26–28	30–34	35
L	5846	5960		82	5A6	wkly to non-calc ; fault gouge 592.0 - 592.4
						upper & lower contacts indeterminate
L	5940	6044		83	5A3	v. calc.
L	6044	6055		84	5D0	
L	6055	6089		85	5A16	(5B621)
L	6089	6104		86	5D*1	dolomitic ; (5D0)
L	6104	6126		87	5A619	(5A619 ⇒ 4A0)
L	6126	6139		88	5D*	dol; (5D0)
L	6139	6144		89	5A61	
L	6144	6150		90	4L1	
L	6150	6194		91	5D0	(5D* dol.)
L	6194	6230		92	5A16	N.B. units 85, 87, 89 & 92 are trying to
						become 4A0 — maybe lateral equivs. of 4A0
L	6230	6280		93	5D0	(5D* dol.)
L	6280	6429		94	5D*	dol. ; (5B68) ; (5B6)
L	6429	6896		95	5B0	⇒ 5B283 ; mod → strongly calc.
L	6896	6944		96	5B72	calc.
L	6944	7013		97	5B20	"
L	7013	7032		98	5D3	
L	7032	7045		99	5B3	
L	7045	7065		100	5B72	calc.
L	7065	7076		101	5B0	
L	7076	7080		102	5D0	
L	7080	7088		103	5B0	
L	7088	7420		104	5D0	(5883) ; (580) ; highly carbonated aubreitic
						horizon 720–723.7
L	7420	7444		105	5D*1	aubreitic, "bleached," non-fuchsite-bearing
L	7444	7574		106	5B*2	dolomitic
L	7574	7695		107	5A6	fault gouge 11 s, 757.8 – 758.1
L	7695	7706		108	5B61	v. lt. gray, mod. siliceous
L	7706	7712		109	5A6	
L	7712	7730		110	5DH*	dolomitic ; minor fuchsite < 1%; upper 1.0 gouged – indeterminate
L	7730	7810		111	5A6	
L	7810	7833		112	5A*	dolomitic ; mod. to heavily veined & fractured
						w/ rusty cream dol.
L	7833	7845		113	4L0	

DDH EAGA075 (2 — 8)

Cyprus Anvil Mining Corp.

Lithologic Log

Date: 17 Sept 81 Logged By: DST

Code	From	To	Recov.	No.	Unit	Description
1	10 — 14	16 — 20	22 — 24	26 — 28	30 — 34	35
L	7845	7860		114	5A6	gouge & broken core, no atts. poss.
L	7860	7895		115	4L1	w/ frags. of 5A6
L	7895	7907		116	5D4*	dol.
L	7907	7935		117	5B62	w/QQQ* sweats & veinlets
L	7935	7984		118	4L0	
L	7984	8040	20	119	5D4*	ankeritic, kaolinitic, pyritic; intensely
						alt'd. 5D; gouge 1" S_2 @ 803' (2" thick)
						poor rec'y over interval - poss. fault
L	8040	8090		120	4E4	fracs. w/ BaSO4 - from KA log Pb>Zn; >20% comb.
L	8090	8125		121	4L0	(4L4)
L	8125	8133		122	5D4*	ankeritic, <1% fuchsite
L	8133	8145		123	5B62	[5A64]
L	8145	8150		124	5D4*	ankeritic
L	8150	8165		125	5B62	
L	8165	8170		126	5D4*	"
L	8170	8250		127	4K4	
L	8250	8275		128	4A0	
L	8275	8310		129	4D0	phyllitic ⟹ 4L4
L	8310	8320		130	4A4	interpretted from KA log; core taken
L	8320	8350		131	4G4	on 4L41 boudin or clast in unit
L	8350	8360		132	4L0	v. minor py (4L2)
L	8360	8503		133	5B62	
L	8503	8528		134	4L2	
L	8528	8576		135	4G4	interpretted from KA log; core taken
L	8576	8590		136	4GH*	(dolomite [4K46]; unit is siliceous
						4G to 4D6 w/ white csely xllne
						patches of dolomite; suspect unit
						#135 is same as KA screwed up BaSO4
						ident. on #127 as well
L	8590	8610		137	4A4	
L	8610	8624		138	5D4*	ankeritic
L	8624	8633		139	5B62	→ 5B621
L	8633	8686		140	4G4	(4K4); some pinkish beige m xllne
						granular CO_3 "patches" in 4G cf. 136
L	8686	8762		141	4L0	(4L4)
L	8762	9153		142	5B62	(5B628)

DDH EAGA075 (2 — 8)

Cyprus Anvil Mining Corp.

Lithologic Log

Date: 18 Sept 81 Logged By: [illegible]

Code	From	To	Recov.	No.	Unit	Description
L	9153	9190		143	4L0	
L	9190	9450		145	5B62	(5B628)
L	9450	9604		146	4L6	(4L0)
L	9604	9764		147	4L0	(4L2) (4L6)
L	9764	9900		148	4L0	w/ 5B6 protolith
L	9900	9925		149	5B6	(4L0) fault gouge; upper contact (S_2,
						lower contact indeterminate
L	9925	9973		150	5B6	minor ankeutic intervals — prob. not CO_2
L	9973	9998		151	4L12	
L	9998	10076		152	5B6	as #150 but broken core interval w/
						gouge @ top & bottom — both indeterminate
L	10076	10105		153	4L2	(5B64)
L	10105	10133		154	5B6	as 150 & 152
L	10133	10188		155	5B64	incipiently altered
L	10188	10280		156	4L2	(5B64)
L	10280	10380	05	157	4L0	(4L2); extremely poor recy — fault?
L	10380	10393		158	5B61	sheared & broken core — no gouge; v. thin
						S_2 bounded clays only
L	10393	10505		159	5B6	
L	10505	10610		160	4L0	gouge, broken & rubbly core — no attitudes poss
L	10610	11410		161	4L0	(4L6); (4L2); 4L weathered bodies
						of hematite-red stained 4L w/
						interlayering of undicated lithologies

C.A.M.C. 1981 – E-3

DDH EAG#.075 (2 Feet 8)

Cyprus Anvil Mining Corp.

Structural Log

Date: 25Sept.81 Logged By: [illegible]

Code	From	To	Feature	Sym	S_0 Dip Direct.	S_1 Dip Direct.	S_2 Dip Direct	Description
1	10 14	16 20	22 24	26	28 32	34 38	40 44	
S		1000	PS 2				30 230	
S		1280	PS 2				55 230	
S		1470	PS 2				50 230	
S		1580	PS 2				40 230	
S		1738	PS 2				45 230	
S		1940	CS 2	S		10 230	45 230	
S		2017	CS 2	S		40 230	60 230	
S		2298	CS 2	Z		50 950	50 230	
S		2430	PS 2				80 230	
S		2595	PS 2				70 230	
S		2635	CS 2	Z		50 050	60 230	
S		3000	PS 2				60 230	
S		3040	CS 2	Z		150 50	75 230	
S		3200	CS 2	D			75 230	
S		3520	CS 2	S		40 230	70 230	
S		3630	CS 2	S		15 230	75 230	
S		3780	CS 2	Z		55 050	75 230	
S		4120	CS 2	Z		50 050	70 230	
S		4304	CS 2	Z		50 050	75 230	
S		4388	CS 2	S		25 230	70 230	
S		4536	PS 2				70 230	
S		4615	CS 2	D			70 230	
S		4911	CS 2	S		55 230	75 230	
S		5110	CS 2	S		40 230	70 230	
S		5146	CS 2	D			80 230	
S		5614	CS 2	Z		30 050	80 230	
S		5916	CS 2	Z		45 050	70 230	
S		6018	CS 2	Z		20 050	75 230	
S		6225	CS 2	S		25 230	75 230	
S		6413	CS 2	Z		60 050	75 230	
S		6618	CS 2	Z		50 050	75 230	
S		6912	CS 2	S		40 230	75 230	
S		7150	CS 2	Z		35 050	70 230	
S		7410	CS 2	Z		45 050	70 230	
S		7630	CS 2	Z		50 050	70 230	
S		7817	CS 2	S		20 230	70 230	

DDH FAG1075 (2 – 8)

Cyprus Anvil Mining Corp.

Structural Log

Date: 18 SEPT 81 Logged By: DSJ.

Code	From	To	Feature	Sym	S_0 Dip Direct.	S_1 Dip Direct.	S_2 Dip Direct	Description
1	10 – 14	16 – 20	22 – 24	26	28 – 32	34 – 38	40 – 44	
S		18140	PS12				7102310	
S		18141	CS12	S		2102310	6102310	
S		18611	CS12	Z		2100150	8102310	
S		18719	CS12	Z		4500150	7502310	
S		19012	CS12	Z		4100150	7502310	
S		19120	CS12	Z		4500150	6502310	
S		19412	CS12	Z		2500150	7102310	
S		19616	CS12	Z		4500150	7502310	
S		19910	CS12	Z		4100150	8102310	
S		11015	CS12	D			6102310	
S		11021	CS12	Z		3500150	7102310	
S		11069	CS12	Z		2100150	8102310	
S		11095	PS12				7102310	
S		11114	CS12	Z		4500150	7502310	
S		11350	CS12	H			9102310	
								END OF HOLE

NB KERR ADDISON. / SUB 9000 SERIES

Manually entered needs down hole survey coords

DDH FAGA075 Cyprus Anvil Mining Corp

Page 1 of 2

Logged by DSJ - JGS

ASSAY LOG (SAMPLER'S COPY)

Date 30 JUL 82 Sampled by KERR ADDI

CODE	FROM	TO	SAMPLE	INTR.	REC (m)	UNIT	DESCRIPTION
1	10 14	16 20	22 26	28 30	32 34	36 40	42
	262	277	90462	15	15	4A4	
	277	290	90463	13	13	4A4	
	290	305	90464	15	15	4A4	
	305	326	90465	21	21	4A4	
	326	351	90466	25	25	4AL	
	351	360	90467	09	09	4AL	
	360	375	90468	15	15	4AL	
	375	390	90469	15	15	4AL	
	390	408	90470	18	18	4AL	
	408	421	90471	13	13	4A4	
	421	436	90472	15	15	4A4	
	436	448	90473	12	12	4A4	
	448	459	90474	11	11	4A4	
	459	472	90475	13	13	4A5D	
	472	488	90476	16	16	4A5D	
	488	504	90477	16	16	4A5D	
	504	515	90478	11	11	4A5D	
	536	567	90479	31	31	4A4	
	567	588	90480	21	21	4A4	
	588	596	90481	08	08	4A4	
	596	613	90482	17	17	4A4	
	613	628	90483	15	15	4A4	
	628	649	90484	21	21	4A4	
	649	677	90485	28	28	4A4	
	684	698	90486	14	14	4AL	
	698	716	90487	18	18	4AL	
	716	728	90488	12	12	4AL	
	728	739	90489	11	11	4AL	
	751	759	90490	08	08	4AL4	
	759	774	90491	15	15	4AL4	
	774	789	90492	15	15	4AL4	
	789	805	90493	16	15	4AL4	

C.A.M.C. 1981 - E - 5

TO BE ENTERED 30 JULY 82

SECT 78W ✓ KERR ADDISON SUB 9000 SERIES

DDH EAGA075 (2 — 8) Cyprus Anvil Mining Corp

Logged by DSJ JGS

ASSAY LOG (SAMPLER'S COPY) Date 30 JUL 82 Sampled by KERR ADD'T

CODE	FROM	TO	SAMPLE	INTR.	REC (m)	UNIT	DESCRIPTION
1	10 — 14	16 — 20	22 — 26	28 — 30	32 — 34	36 — 40	42
F							
	1805	1821	904914	16	16	4A44	
	1821	1841	904915	20	20	4A44	
	1841	1858	904916	17	17	4A44	
	1858	1878	904917	20	20	4A44	
	1878	1891	904918	13	13	4A44	
	1891	1908	904919	17	17	4A44	
	1908	1919	905100	11	11	4A44	
	1923	1939	905101	16	16	4A44	
	1939	1963	905102	24	24	4A44	
	1963	1978	905103	15	15	4A44	
	1978	1991	905104	13	13	4A44	
	1991	11003	905105	12	12	4A44	
	11003	11033	905106	30	30	4A44	
	11033	11047	905107	14	14	4A44	
	11047	11062	905108	15	15	4A44	
	11062	11077	905109	15	15	4A44	
	11077	11087	905110	10	10	4A44	
	11091	11109	905111	18	18	4A44	
	12450	12465	905112	15	15	4E44	
	12490	12506	905113	16	16	4AK1	
	12506	12522	905114	16	16	4AK1	
	12530	12536	905115	06	06	4AK1	
	12536	12547	905116	11	11	4AK1	
	12594	12614	905117	20	20	4G44	
	12614	12625	905118	11	11	4G44	
	12628	12643	905119	15	15	4G44	
	12643	12649	905120	06	06	4G44	

END OF ASSAY

TO BE ENTERED.

¡ FEET !

FAULT

DDH FAGA075 (2 8) Cyprus Anvil Mining Corp.

Structural Log

Page _____ of _____

Date: Oct 3/83 Logged By: _____

Code	From	To	Feature	Sym	S_0 Dip Direct.	S_1 Dip Direct.	S_2 Dip Direct	Description
1	10 14	16 20	22 24	26	28 32	34 38	40 44	
F	860	1030		8				82% recovry — no reason why
F	1030	1151	R	0				8% recovry — rubble only
F	1151	1281	X	5				53% recovry — in part bxated
F	1281	1320		2				25% recovry
F	1320	1340	R					rubble & ground core only
F	1480	1505	X					bxiated & recrystallized
F	1505	1520	B					broken, blocky
F	1530	1542	B					broken, blocky crap
F	1550	1630	R	3				rubbly, garbage core —
								37% recovry
		1630	G					mud seam reported by K-A
F	1630	1695	NNN					No core — sampled by K-A
F	1760	1840	R	2				25% recovry, ground
								rubbly core
F	1850	2224	NNN					All high grade sections
								sampled by K-A
F	2463	2630	NNN					Some sections sampled by K-A —
								no core
F	2930	2980	NNN					Interval missing — sampled
								by K-A ??
F	3150	3160	G					IND gouge
F	3251	3290	BR	5				50% recovry, broken,
								ground & rubbly core
F	3290	3390	NNN					core sampled by K-A
F	3390	3392	R					rubbly core zone
F		3853	G					IND
F		3950	G			99999		gouge // S_2
F	3917	4184	GPB				99999	gouge zone, poor recovry
								lower contact // S_2
								upper contact IND
								MAJOR FAULT
F	4483	4488	G			99999		gouge // S_2
F	5920	5924	G					fault gouge IND
F	7578	7581	G			99999		fault gouge // S_2
F	7712	7722	G					gouged IND
F	7810	7833	Q					mod. to heavily veined &

C.A.M.C. 1981 - E - 4

fractured w/ rusty cream dolomite

¡FEET!

FAULT

DDH FAGA075 (2 … 8)

Cyprus Anvil Mining Corp.

Structural Log

Page _____ of _____

Date: _____ Logged By: _____

Code	From	To	Feature	Sym	S_0 Dip Direct.	S_1 Dip Direct.	S_2 Dip Direct	Description
1	10 … 14	16 … 20	22 … 24	26	28 … 32	34 … 38	40 … 44	
F	17814.5	17816.0	GBI					gouged & broken core IND
F		18030	G			999 999		2" gouge // S_2
F	17984	18040	P					altered, kaolinitic, poor recovery
F	18310	18320	NNN					No core - sampled by K-A
F	18528	18576	NNN					core taken by K-A
F	19900	19925	G		999 999			fault gouge, upper // S_2, lower IND
F	19998	101076	BG					broken w/ IND gouge at top & 60 Horn
F	101280	101380	P					Extremely poor recovery
F	101380	101393	SB					sheared & broken core - no gouge
F	10505	10610	GBR					gouge, broken & rubbly core no attitudes

DIAMOND DRILL RECORD

LOGGED BY S. B. Reamsbottom

PROPERTY VANGORDA, GRUM JOINT VENTURE

D.D.H. No. 75-A75 PAGE 1 of 16

LATITUDE LINE GRID 9 + 86 N | HIW 36091.72N (11,000-76"N)

DEPARTURE L 78 W | 25069.06E (7641.05"E)

ELEVATION 4262' | 4303.90' (1311.83"

BEARING OF HOLE BY TROPARI: 202' 279° 50'; 442' 69° 36'; 662' 13° 20'; 862' 36° 50'; 1062' 80° 50'

DIP OF HOLE (90°) BY TROPARI

DIP TESTS: 202' -88°; 442' -87°; 662' -85°; 862' -83°; 1062' -80°

STARTED May 12, 1975 D.S.

COMPLETED May 21, 1975 N.S.

DEPTH Proposed: 1140' Ultimate: 1141' (347.78")

HOLE SIZE 0 - 86 BW; 86 -1141 BQ

CLAIM No.

DIRECTION AND DISTANCE FROM NE. CLAIM POST

FOOTAGE FROM	FOOTAGE TO	DESCRIPTION	Rec. Ft.	Sample No.	Footage From	Footage To	Sample Length	Assay Pb	Assay Zn	Assay Ag	Assay Au	Assay Cu	Assay x Feet Pb	Assay x Feet Zn	Assay x Feet Ag
			0/86		0	86									
0	86	OVERBURDEN													
86	107	GRAY-BLACK STRIPED QUARTZ - GRAPHITE PHYLLITE													
		Mineralized - thin bands of purple sphalerite, bleby pyrite, galena, concentrated mainly in F2 foliation. Sulphide content	2.5	1646	86	91	5	2.28	5.58	1.18			11.4	27.9	5.9
		varies 5-10%. Sphalerite rich in higher grade sections. Note - rock is quite quartzitic. Quite broken.	4	1647	91	95	4	1.60	3.84	.76			6.4	15.36	3.04
		No. 1646 -- quartz-graphite-phyllite, 5-6% sulphides, 6% lead-zinc	3.5	1648	95	100	5	2.00	4.02	.91			10	20.1	4.55
		No. 1647 -- quartz-graphite-phyllite, dissem. pyrite, sphalerite, galena, 2-5% sulphides, 2-4% lead-zinc	2.5	1649	100	107	7	1.85	3.90	.88			12.95	27.3	6.16
		No. 1648 -- as above. Fine-grainned dissem. sphalerite.													
		No. 1649 -- 2-3% sulphide, 1-2% lead-zinc, fine-grainted sphalerite								(32.19"/n.r.)			40.75	90.66	19.65
					86.0	107.0	21.0	1.94	4.32	.94	Weighted Average				
		Core Angle: 95' = 45°; 100' = 25°.													
107	134	PALE GRAY-WHITE QUARTZ - SERICITE PHYLLITE Mineralized													
		Brecciated, mylonized 111-118'; pale green mariposite at 128.5'. Rock broken.	1.2	1795	107	115	8.0	1.23	3.30	0.44			9.84	26.40	3.52
		Mineralization: fine-grained pyrite, sphalerite, minor galena, chalcopyrite locally fine-grained marcasite. Note bleby nature	3.3	1650	115	118	3	2.20	3.48	1.00			6.6	10.44	3.0
		of pyrite. No. 1650 -- mineralized breccia, quartz-sericite phyllite	3.2	1651	118 (123.0~	123 124.8)	5 (1.8)	2.35	4.32	.91			11.75 2.97	21.6 5.508	4.55 1.278
		3-4% sulphides, bleby pyrite, sphalerite, galena, minor chalcopyrite, 3-5% lead-zinc	1	1652	123	128	5	1.65	3.06	.71			8.25	15.3	3.55
		No. 1651 -- as above, 2-5% sulphides, 3-5% lead-zinc	2.5	1796	128	134	6.0	1.23	4.59	0.53			7.38	27.54	3.18
		No. 1652 -- as above, 1-2% sulphides, 1% lead-zinc													

DIAMOND DRILL RECORD

LOGGED BY S. B. Reamsbottom

PROPERTY

LATITUDE _____ BEARING OF HOLE _____ STARTED _____

DEPARTURE _____ DIP OF HOLE _____ COMPLETED _____

ELEVATION _____ DIP TESTS _____ DEPTH Proposed: _____ Ultimate: _____

D.D.H. No. 75-A75 PAGE 2 of 16

CLAIM No. _____

N

DIRECTION AND DISTANCE FROM NE. CLAIM POST

FOOTAGE FROM	FOOTAGE TO	DESCRIPTION	Rec. Ft.	Sample No.	Footage From	Footage To	Sample Length	Assay Pb	Assay Zn	Assay Ag	Assay Au	Assay Cu	Assay x Feet Pb	Assay x Feet Zn	Assay x Feet Ag
		Note minor sphalerite 1% @ 128-134'.													
		Core Angles: 63° @ 120', 45° @ 130': note mariposite		WT.Av	107.0	134.0	27.0	1.62	3.75	0.66	(22.6 %/ft.)		43.82	101.28	17.80
				WT.Av	115.0	124.8	9.8	2.18	3.83	0.90	(30.9)		21.32	37.548	8.828
134	150.5	BLACK STRIPED QUARTZOSE, MINERALIZED GRAPHITIC PHYLLITE													
		Buff carbaonates locally associated with green mariposite.	4	1653	134	138	4	2.18	5.88	.91			8.72	23.52	3.64
		Sulphide content varies from 2-3% to 7-8%. Locally thin (0.5-1')													
		sections of massive sulphide. Mineralization - fine-grained	3	1654	138	143	5	1.48	3.48	.71			7.4	17.4	3.55
		purple sphalerite, minor galena. Local massive pyrite with													
		pyrrhotite and minor magnetite at 137'. Minor chalcopyrite.	4	1655	143	147	4	1.63	3.78	.71			6.52	15.12	2.84
		Note fine-grained sphalerite generally predominates concentrated													
		in F2 foliation. Grade varies 1-2% to 8%.	3.1	1656	147	150.5	3.5	2.20	5.76	1.15			7.7	20.16	4.03
		No. 1653 -- mineralized phyllite, 5-6% sulphides, 6-8% lead-zinc, sphalerite rich													
		No. 1654 -- mineralized, 6% sphalerite, 3-5% lead-zinc: pyrite,			134	150.5	16.5	1.84	4.62	.85 (29.2 %/ft.)	Weighted Average		30.34	76.20	14.06
		sphalerite, pyrrhotite, chalcopyrite													
		No. 1655 -- mineralized phyllite, 5-8% sulphides, 5-6% lead-zinc: sphalerite, pyrite, galena													
		No. 1656 -- mineralized phyllite band (1") massive sphalerite rich													
		in sulphides: 10-15% lead-zinc, 30% sulphide													
		Core Angles: 80° @ 140', 63° @ 145', 60° @ 150' in M.S.													
150.5	169.5	PALE WHITE MINERALIZED QUARTZITIC PHYLLITE													
		Locally green mariposite, buff carbonate zones. Rock quite	3.9	1657	150.5	155	4.5	.34	1.90	.18					
		broken. Mineral: fine-grained sphalerite, pyrite lesser galena													
		concentrated in F2. Sulphides up to 10%.	2.2	1658	155	160	5.0	3.30	5.52	1.47			16.50	27.60	7.35
		Grade: 6-10% lead-zinc													

DIAMOND DRILL RECORD

LOGGED BY S. B. Reamsbottom

PROPERTY _____

LATITUDE _____ BEARING OF HOLE _____ STARTED _____

DEPARTURE _____ DIP OF HOLE _____ COMPLETED _____

ELEVATION _____ DIP TESTS _____ DEPTH Proposed: _____ Ultimate: _____

D.D.H. No. 75-A75 PAGE 3 of 16

CLAIM No. _____

N

DIRECTION AND DISTANCE FROM NE. CLAIM POST

FOOTAGE FROM	FOOTAGE TO	DESCRIPTION	Rec. Ft.	Sample No.	Footage From	Footage To	Sample Length	Assay Pb	Assay Zn	Assay Ag	Assay Au	Assay Cu	Assay x Feet Pb	Assay x Feet Zn	Assay x Feet Ag
		No. 1657 -- weak mineralized quartz-sericite phyllite mariposite.	1.5	1659	160	165.5	5.5	.28	.96	.15			1.54	5.28	0.825
		2-3% sulphides, 1% lead-zinc. No. 1658 -- mineralized quartz-sericite phyllite, 10% sulphide,	3.4	1660	165.5	168.9	3.4	2.93	5.88	1.32			9.962	19.992	4.488
		6-8% lead-zinc, rich sphalerite No. 1659 -- weak mineralized phyllite, less than 1%	1.6		168.9	169.5									
		No. 1660 -- mineralized quartz-sericite phyllite, 8-10% sulphides, 8% lead-zinc, sphalerite rich.		Wt. Av.	155.0	168.9	13.9	2.01	3.80	0.91	(31.2)		28.002	52.872	12.663
		Core Angle: 48° @ 160', 57° @ 165'.													
169.5	176	WHITE-GREEN QUARTZ MARIPOSITE PHYLLITE													
		Minor pyrite blebs. Creamy carbonate sericite. Core Angle: 72° @ 170', F2 dominant.	5.5/ 6.5		169.5	176		Negligible		lead-zinc					
176	222	BLACK STRIPED QUARTZ - GRAPHITIC MINERALIZED PHYLLITE													
		Well defined F2. F1 quartz laminae (1-2mm) crenulated, subvertical to F2. Possibly at F2 fold nose. Mineralized - fine-grained	5	1661	176	186	10	1.60	1.96	.62					
		dark purplish sphalerite speckled with pyrite. Fine-grained galena with sphalerite. Some massive sphalerite, galena, pyrite	2.8	1662	186	193	7	1.48	3.36	.65					
		bands up to 2-3" wide. Grade varies 1-2% lead-zinc to 15-20% lead-zinc or greater. Sulphide 1-2% to locally 25-30%. Note,	2.5	1663	193	195.5	2.5	1.93	4.50	1.00					
		the rock is quite quartzitic - up to 70% quartz.	5.5	1664	195.5	201	5.5	3.90	9.08	1.88			21.45	49.94	10.34
		No. 1661 -- weak mineralized phyllite, 2-3% sulphides, 1-2% lead-zinc	3	1665	201	206	5	3.15	5.16	1.26			15.75	25.80	6.30
		No. 1662 -- mineralized phyllite, 6-8% sulphide, 2-3% lead-zinc	3	1666	206	213	7	4.35	6.36	1.68			30.45	44.52	11.76
		No. 1663 -- mineralized phyllite, 5-8% sulphides, 3-5% lead-zinc	5	1667	213	222	9	1.95	3.30	.88					
		No. 1664 -- mineralized phyllite, 10-15% sulphide, 8-11% lead-zinc													
				Wt. Av	195.5	213.0	17.5	3.87	6.87	1.62	(55.6)		67.65	120.26	28.40

DIAMOND DRILL RECORD

LOGGED BY S. B. Reamsbottom

PROPERTY

LATITUDE BEARING OF HOLE STARTED

DEPARTURE DIP OF HOLE COMPLETED

ELEVATION DIP TESTS DEPTH Proposed: Ultimate:

D.D.H. No. 75-A75 PAGE 4 of 16

CLAIM No.

N

DIRECTION AND DISTANCE FROM NE. CLAIM POST

FOOTAGE FROM	FOOTAGE TO	DESCRIPTION	Rec. Ft.	Sample No.	Footage From	Footage To	Sample Length	Assay Pb	Assay Zn	Assay Ag	Assay Au	Assay Cu	Assay x Feet Pb	Assay x Feet Zn	Assay x Feet Ag
		No. 1665 -- as above - 8-10% sulphides, 8% lead-zinc, sphalerite rich. 203-206' -- 1 foot recovered													
		No. 1666 -- as above - 8-10% sulphides, 8% lead-zinc, sphalerite rich.													
		Note - 206-209' -- 2 feet recovered, 209-213 feet -- 1 foot recovered													
		No. 1667 -- weakly mineralized striped graphite phyllite, 3-5% sulphides, 1% lead-zinc													
		Core Angle: 200' = F1 subvertical, F2 = 25°.													
222	242.5	WHITE, MINERALIZED, QUARTZ - RICH SERICITE PHYLLITE	2.3		222.0	224.3	—								
		Abundant red sphalerite and less galena concentrated in both F1 and F2 laminae. Rock quite siliceous. Up to 25-30% sphalerite	4.7	1668	224.3	229	4.7	2.85	4.50	1.09			13.40	21.15	5.12
		rich sulphide. Grade 10-15% lead-zinc. Note thin zones of green mariposite at 222-224.4'.	5.0	1669	229	234	5.0	2.13	3.96	1.03			10.65	19.8	5.15
		Quartz rich F1 laminae well defined, good F2 foliation.	5.0	1670	234	239	5.0	1.40	3.54	.59			7.	17.7	2.95
		No. 1668 -- white, quartz rich sericite phyllite, 20-25% sulphide, 10-12% lead-zinc	3.5	1671	239	242.5	3.5	2.43	5.40	1.03			8.51	18.9	3.61
		No. 1669 -- white, quartz rich sericite phyllite, 20% sulphide, 10% lead-zinc													
		No. 1670 -- white, quartz rich sericite phyllite, 15-20% sulphide, 8-10% lead-zinc			224.3	242.5	18.2	2.17	4.26	.93 (31.7)	Weighted Average		39.56	77.55	16.83
		No. 1671 -- white, quartz rich sericite phyllite, 15-20% sulphide, 10% lead-zinc													
		All above: fine-grained, red sphalerite, galena, blebs of pyrite in F2 mainly, but also F1. Rock quite quartzitic.													
		Core Angle: 220' ≠ F2 = 46°; 230' ≠ F2 folds, F2 = 63°; 240' = 61°.													

DIAMOND DRILL RECORD

LOGGED BY S. B. Reamsbottom

PROPERTY

LATITUDE BEARING OF HOLE STARTED

DEPARTURE DIP OF HOLE COMPLETED

ELEVATION DIP TESTS DEPTH Proposed: Ultimate:

D.D.H. No. 75-A75 PAGE 5 of 16

CLAIM No.

N

DIRECTION AND DISTANCE FROM NE. CLAIM POST

FOOTAGE FROM	FOOTAGE TO	DESCRIPTION	Rec. Ft.	Sample No.	Footage From	Footage To	Sample Length	Assay Pb	Assay Zn	Assay Ag	Assay Au	Assay Cu	Assay x Feet Pb	Assay x Feet Zn	Assay x Feet Ag
242.5	246.5	PALE - BUFF to GREEN QUARTZ-CHLORITE PHYLLITE													
		With buff quartz-carbonate laminae. Specks of pyrite disseminated throughout.	140		242.5	246.5	—								
		Core Angle: 70° @ 245'.													
246.5	269.3	PALE WHITE, MINERALIZED QUARTZITIC SERICITE PHYLLITE													
		With orange-red sphalerite, pyrite and galena concentrated mainly in F2 foliation. 10-20% sulphides, 8-10% lead-zinc. Quartz rich	2.5	1672	246.5	249	2.5	1.45	4.74	.59					
		laminae (5 mm) locally boudinaged with sulphides concentrated	5.0	1673	249	254	5.0	3.60	10.82	1.47			18	54.1	7.35
		in necks. Tensional gashes filled with fine-grained sphalerite,	5.0	1674	254	259	5.0	3.60	7.08	1.76			18	35.4	8.8
		galena and pyrite. Incipient boudinage.	5.0	1675	259	264	5.0	3.45	5.64	1.50			17.25	28.2	7.5
		No. 1672 -- mineralized quartz phyllite, 5-8% sulphide, 5% lead-zinc	5.3	1676	264	269.3	5.3	4.05	7.08	1.65			21.47	37.52	8.75
		No. 1673 -- mineralized quartz phyllite - bands of pyrite, orange sphalerite, 10-15% sulphide, 10-12% lead-zinc													
		No. 1674 -- as above, 10% sulphide, 8-10% lead-zinc													
		No. 1675 -- as above, 10-15% sulphide, 10-12% lead-zinc													
		No. 1676 -- as above, 10-15% sulphide, 10% lead-zinc													
		Core Angle: 51° @ 250', post mineralized fault subvertical; 69° @ 260', 72° @ 265'.			249	269.3	20.3	3.68	7.56	1.68 (54.7)	Weighted Average		74.72	155.22	32.40
269.3	275.8	BUFF & GREEN QUARTZ-CHLORITE PHYLLITE WITH TWO BANDS OF MINERALIZED													
		SPHALERITE RICH QUARTZ - SERICITE PHYLLITE	6.5	1677	269.3	275.8	6.5	.70	2.58	.29					
		Core Angle: 63° @ 270', F2 dominant.													
		No. 1677 -- chlorite-phyllite with bands (1") sphalerite rich quartz phyllite, 1-2% lead-zinc													

DIAMOND DRILL RECORD

LOGGED BY S. B. Reamsbottom

PROPERTY

LATITUDE BEARING OF HOLE STARTED

DEPARTURE DIP OF HOLE COMPLETED

ELEVATION DIP TESTS DEPTH Proposed: Ultimate:

D.D.H. No. 75-A75 PAGE 6 of 16

CLAIM No.

N

DIRECTION AND DISTANCE FROM NE. CLAIM POST

FOOTAGE FROM	FOOTAGE TO	DESCRIPTION	Rec. Ft.	Sample No.	Footage From	Footage To	Sample Length	Assay Pb	Assay Zn	Assay Ag	Assay Au	Assay Cu	Assay x Feet Pb	Assay x Feet Zn	Assay x Feet Ag
275.8	302.8	PALE WHITE QUARTZ - RICH MINERALIZED SERICITE PHYLLITE													
		Abundant dark red sphalerite, galena, less pyrite. Chalcopyrite in tension gashes. Rock locally brecciated: white quartz-sericite fragments in sulphide matrix. Pyrrhotite in these zones. F2 dominant - sulphide in F2 and also F1 laminae. 10-35%	5.6	1678	275.8	281.4	5.6	4.43	7.68	1.76			24.808	43.008	9.856
			6.6	1679	201.4	288.0	6.6	2.33	4.44	1.00			15.378	29.304	6.600
		sulphide, grade +8, locally 20% lead-zinc. Local zones (0.5') of bright turquoise green mariposite -- last 1.4' of section for example.	4.4	1680	288 (291.4 ~ 292.4)	292.4 (1.0)	4.4	3.53	6.48	1.38			15.53 3.53	28.51 6.48	6.07 1.38
		No. 1678 -- white quartz-sericite phyllite, 15-50% sulphide, 10-15% lead-zinc	5.6	1681	292.4	298	5.6	4.99	8.76	2.06			27.94	49.06	11.54
		No. 1679 -- gray quartz-graphite phyllite, 8-10% sulphide, 6-8% lead-zinc	3.4	1682	298	301.4	3.4	3.68	7.80	1.41			12.51	26.52	4.79
		No. 1680 -- white quartz-sericite phyllite, 20-25% sulphide, 15-20% lead-zinc	1.4		301.4	302.8	—								
		No. 1681 -- white quartz-sericite phyllite, 25-30% sulphide, 20-25% lead-zinc		Wt. Av.	275.8	301.4	25.6	3.76	6.89	1.52	(520)		96.17	176.40	38.858
		No. 1682 -- white quartz-sericite phyllite, 15-20% sulphide, 10% lead-zinc		Wt. Av.	291.4	301.4	10.0	4.4	8.21	1.77	(60.7)		43.986	82.056	17.71
		Core Angle: 80° @ 280', 67° @ 290', F2 folds 87° @ 300',													
302.8	363.5	DARK GRAY & BLACK, STRIPED, MINERALIZED QUARTZ- GRAPHITIC PHYLLITE													
		Minor zones (1-2') of paler gtz-serv phyllite w/minor green mariposite. Also buff quartz-sericite-carbonate phyllite (358-359').	5.2	1683	302.8	308	5.2	1.63	3.60	.71			8.48	18.72	3.69
		Mineralization: sulphide 10-20%, red-orange sphalerite, pyrite, minor galena; pyrrhotite and magnetite at 353'. Grade varies	3.4	1684	308	316	8.0	1.10	3.12	.44			8.8	24.96	3.52
		3-5% to 10-15% lead-zinc. Gouge @ 310-316'. Broken rock @ 308-342'. Poor recovery @ 308-343.5'.	3.3	1685	316	321	5.0	2.25	7.08	1.00			11.25	35.4	5.00
		Many F2 folds, F1 subvertical.	3.5	1686	321	325	4.0	3.23	6.72	1.18			12.92	26.88	4.72
		No. 1683 -- striped graphite phyllite, 15-20% sulphide, 8% lead-zinc													

DIAMOND DRILL RECORD

LOGGED BY S. B. Reamsbottom

PROPERTY

LATITUDE BEARING OF HOLE STARTED

DEPARTURE DIP OF HOLE COMPLETED

ELEVATION DIP TESTS DEPTH Proposed: Ultimate:

D.D.H. No. 75-A75 PAGE 7 of 16

CLAIM No.

DIRECTION AND DISTANCE FROM NE. CLAIM POST

FOOTAGE FROM	FOOTAGE TO	DESCRIPTION	Rec. Ft.	Sample No.	Footage From	Footage To	Sample Length	Assay Pb	Assay Zn	Assay Ag	Assay Au	Assay Cu	Assay x Feet Pb	Assay x Feet Zn	Assay x Feet Ag
		No. 1684 -- striped graphite phyllite, gouge last few feet, 10% sulphide, 5-6% lead-zinc	2.3	1687	325	329	4.0	3.98	6.60	1.53			15.92	26.4	6.12
		No. 1685 -- graphite phyllite, 10% sulphide, 6-8% lead-zinc	2	1688	329	339	10.0	6.09	14.43	2.35					
		No. 1686 -- sericite-quartz phyllite, 8-10% sulphide, 6-8% lead-zinc	1.9	1689	339	343.5	4.5	3.23	8.97	1.56					
		No. 1687 -- as above, 5% lead-zinc	5.0	1690	343.5	348.5	5.0	2.38	5.34	1.03					
		No. 1688 -- striped graphite phyllite, 10% sulphide, 8% lead-zinc	5.0	1691	348.5	353.5	5.0	4.95	6.36	1.73					
		No. 1689 -- graphite phyllite, 5-8% sulphide, 3-5% lead-zinc	3.0	1692	353.5	356.5	3.0	2.85	5.64	1.32					
		No. 1690 -- striped quartz-graphite phyllite, 10-15% sulphide, 8-10% lead-zinc	1.4		356.5	357.9									
		No. 1691 -- striped quartz-graphite phyllite, 15-20% sulphide, 10-12% lead-zinc	6.1	1693	357.9	364.0	6.1	3.08	5.88	1.18					
		No. 1692 -- striped quartz-graphite phyllite, 10-15% sulphide, 8-10% lead-zinc													
		No. 1693 -- striped quartz-graphite phyllite, 10% sulphide, 6% lead-zinc													
		Core Angles: 85° @ 320', F1 subvertical, F2 folds; 85° @ 330', 82° @ 340', 85° @ 350', 69° @ 360', local F1 folds.		Wt. Av.	302.8	316.0	13.2	1.31	3.31	.55	(18.7)		17.28	43.68	7.21
				Wt. Av.	316.0	356.5	40.5	3.97	8.61	1.58	(54.2)		160.73	348.77	64.12
		Note that sulphide is concentrated in F2.		Wt. Av.	316	329	13.0	3.08	6.82	1.22 (41.8)	Weighted Average		40.04	88.66	15.84
				Wt. Av.	321.0	343.5	22.5	4.63	10.58	1.84	(63.0)		104.175	237.945	41.36
				Wt. Av.	343.5	356.6	13.0	3.48	5.80	1.37	(46.8)		45.20	75.42	17.76
363.5	395	DARK GRAY TO BLACK STRIPED QUARTZ - GRAPHITE PHYLLITE													
		With zones (1-2') of gray-cream quartz-chlorite-sericite phyllite at 363-365', 369-370' and 377-379'. Well defined F2, F1	5/10		385	395									
→ Quartz		locally subvertically folded. Quartz veins 385-395'. Note minor red sphalerite, galena @ 379 and 390'. Minor pyrite. Rock													
		broken, gouged at 385-419'. Poor recovery.													
		Core Angle: 62° @ 370', 79° @ 380', F1 subvertical, 80° @ 390'.													

DIAMOND DRILL RECORD

LOGGED BY S. B. Reamsbottom

PROPERTY

LATITUDE BEARING OF HOLE STARTED

DEPARTURE DIP OF HOLE COMPLETED

ELEVATION DIP TESTS DEPTH Proposed: Ultimate:

D.D.H. No. 75-A75 PAGE 8 of 16

CLAIM No.

DIRECTION AND DISTANCE FROM NE. CLAIM POST

FOOTAGE FROM	FOOTAGE TO	DESCRIPTION	Rec. Ft.	Sample No.	Footage From	Footage To	Sample Length	Assay Pb	Assay Zn	Assay Ag	Assay Au	Assay Cu	Assay x Feet Pb	Assay x Feet Zn	Assay x Feet Ag
395	450.5	GRADES TO GRAY QUARTZ - SERICITE PHYLLITE													
		Well laminated, well defined F2 foliation with F1 laminae sub-vertical. Minor pyrite, sphalerite @ 420-431'. Note "clasts" of black graphite phyllite @ 420-431'. Many buff-cream carbonate veins stringers. Quartz vein @ 424-425'. Rock muddy gouged @ 395-419'.	10/24		395	419									
		Core Angle: 42° @ 400', 69° @ 420', 60° @ 430', 66° @ 440', 72° @ 450'.													
450.5	457	GREEN, STRIPED CHLORITE-SERICITE PHYLLITE													
		With pale carbonate stringers. Talcy texture. Many F2 folds. F1 and F2 subvertical.													
		Core Angle: 71° @ 455'. Good recovery.													
457	480.3	GREEN FINELY LAMINATED QUARTZ - CHLORITE - SERICITE PHYLLITE													
		Finer grade than above unit. Fine (2 mm) laminae of quartz. F2 dominant. Good recovery.													
		Core Angle: 80° @ 460', 72° @ 470', 73° @ 480'.													
480.3	498.5	GREEN STRIPED CHLORITE - SERICITE - CARBONATE PHYLLITE													
		Pale green, talcy texture - soft - soapy. Good F2 foliation and folds. Good recovery.													
		Core Angle: 80° @ 490', 78° @ 500'.													

DIAMOND DRILL RECORD

LOGGED BY S. B. Reamsbottom

PROPERTY _____

LATITUDE _____ BEARING OF HOLE _____ STARTED _____

DEPARTURE _____ DIP OF HOLE _____ COMPLETED _____

ELEVATION _____ DIP TESTS _____ DEPTH Proposed: Ultimate: _____

D.D.H. No. 75-A75 PAGE 9 of 16

CLAIM No. _____

N

DIRECTION AND DISTANCE FROM NE. CLAIM POST

FOOTAGE FROM	FOOTAGE TO	DESCRIPTION	Rec. Ft.	Sample No.	Footage From	Footage To	Sample Length	Assay Pb	Assay Zn	Assay Ag	Assay Au	Assay Cu	Assay x Feet Pb	Assay x Feet Zn	Assay x Feet Ag
498.5	513	GRAY-GREEN QUARTZ - SERICITE - CHLORITE PHYLLITE Finely laminated. Good F2. Minor pyrite. Locally graphitic. Buff carbonate laminae. Core Angle: 65° @ 510'.													
513	539.7	GREEN QUARTZ - CHLORITE - SERICITE PHYLLITE Fine laminae - F2 predominates. Thin quartz-carbonate laminae. Rock fresh competent. Minor pyrite. Core Angle: 72° @ 520', 72° @ 530'.													
539.7	547	BLACK STRIPED WEAKLY MINERALIZED GRAPHITIC PHYLLITE Well defined F2 folds. 3-5% sulphide. Pyrite, sphalerite, galena. Less than 1% lead-zinc. Core Angle: 72 @ 540'.													
547	570	GREEN QUARTZ - CHLORITE - SERICITE PHYLLITE With thin zones of black graphite phyllite (558-559', 563.5-564.5', 567-569'), F2 foliation dominant. Minor sphalerite in graphitic bands. Core Angle: 72° @ 550', 75° @ 560', 60° @ 570'. Good recovery.													

DIAMOND DRILL RECORD

LOGGED BY S. B. Reamsbottom

PROPERTY _____

LATITUDE _____ BEARING OF HOLE _____ STARTED _____

DEPARTURE _____ DIP OF HOLE _____ COMPLETED _____

ELEVATION _____ DIP TESTS _____ DEPTH Proposed: _____ Ultimate: _____

D.D.H. No. 75-A75 PAGE 10 of 16

CLAIM No. _____

N

DIRECTION AND DISTANCE FROM NE. CLAIM POST

FOOTAGE FROM	FOOTAGE TO	DESCRIPTION	Rec. Ft.	Sample No.	Sample Footage From	Sample Footage To	Sample Length	Assay Pb	Assay Zn	Assay Ag	Assay Au	Assay Cu	Assay x Feet Pb	Assay x Feet Zn	Assay x Feet Ag
570	623	BLACK STRIPED QUARTZ - GRAPHITIC PHYLLITE Good F2 folds, minor pyrite, Pyrrhotite @ 571'. Quartz-chlorite veins. Good recovery. Core Angle: 76° @ 575'. Blebs of pyrite, pyrrhotite in foliation and in traverse fractures. Quartz veins with chlorite. Good F2. Local F2 fold noses example 607'. Core Angle: 76° @ 575', 55° @ 580', 70° @ 600', 610' = F2 @ 70°, F1 subvertical, F2 fold nose @ 620' @ 77°.												
623	690	GRAY QUARTZ - SERICITE PHYLLITE Finely lamiated good F2. Many small scale F2 folds where F1 subvertical to F2. Quartz-chlorite veins. Minor blebs of pyrite and pyrrhotite. Recovery is good. Rock competent. Core Angle: 80° @ 630', 80° @ 640', 70° @ 650', 70° @ 660', 72° @ 670'. F2 folds @ 660' @ 70°, 75° @ 680', 80° @ 690'.												
690	740	GRAY-GREEN CHLORITE - SERICITE - QUARTZ PHYLLITE Essentially same as above but with greater chlorite content. Blebs and layers of pyrrhotite and pyrite. Abundant quartz-chlorite veins. Rock competent but broken 720-723'. F2 laminae dominant. Recovery good. Core Angle: 65° @ 700', 78° @ 710' F2 folds, 72° @ 720' (rock broken,												

DIAMOND DRILL RECORD

LOGGED BY S. B. Reamsbottom

PROPERTY _____

LATITUDE _____ BEARING OF HOLE _____ STARTED _____

DEPARTURE _____ DIP OF HOLE _____ COMPLETED _____

ELEVATION _____ DIP TESTS _____ DEPTH Proposed: Ultimate: _____

D.D.H. No. 75-A75 PAGE 11 of 16

CLAIM No. _____

N

DIRECTION AND DISTANCE FROM NE. CLAIM POST

FOOTAGE FROM	FOOTAGE TO	DESCRIPTION	Rec. Ft.	Sample No.	Sample Footage From	Sample Footage To	Sample Length	Assay Pb	Assay Zn	Assay Ag	Assay Au	Assay Cu	Assay x Feet Pb	Assay x Feet Zn	Assay x Feet Ag
		quartz veins, 70° @ 730', F2 fold nose, 84° @ 740', small scale F2 folds.													
740	756	GRAY STRIPED QUARTZ - SERICITE PHYLLITE													
		Thin partings (1-2')of creamy quartz-sericite phyllite, 742-4, 750-751. Slip, mini fault @ 753'. F2 dominant, F1 folded subvertical to F2. Quartz filled tension gashes subvertical to F2 @ 745'.													
		Core Angle: 79° @ 740', 73° @ 750'.													
756	782	DARK GRAY-BLACK QUARTZ - GRAPHITIC PHYLLITE													
		Finely laminated. F2 dominant. Zones of pale quartz-sericite with 5% green mariposite @ 770-773'.													
		Core Angle: 65° @ 760', 85° @ 770', 70° @ 780'.													
782	803.9	ZONE OF ALTERED BUFF- GREENISH QUARTZ - SERICITE PHYLLITES AND GRAY MODERATELY GRAPHITIC PHYLLITES													
		Rocks pale with network of quartz-white carbonate veins. Also buff carbonate in foliation. Blebs and stringers of pyrrhotite, pyrite and red sphalerite. Last few feet before massive sulphide pale - bleached with pale green mariposite.	2.5/6	798	798	804									
		Core Angle: 65° @ 790', 85° @ 800'.													

DIAMOND DRILL RECORD

LOGGED BY S. B. Reamsbottom

PROPERTY

D.D.H. No. 75-A75 PAGE 12 of 16

LATITUDE BEARING OF HOLE STARTED

CLAIM No.

DEPARTURE DIP OF HOLE COMPLETED

DIRECTION AND DISTANCE FROM NE. CLAIM POST

ELEVATION DIP TESTS DEPTH Proposed: Ultimate:

FOOTAGE FROM	FOOTAGE TO	DESCRIPTION	Rec. Ft.	Sample No.	Footage From	Footage To	Sample Length	Assay Pb	Assay Zn	Assay Ag	Assay Au	Assay Cu	Assay x Feet Pb	Assay x Feet Zn	Assay x Feet Ag
803.9	835.5	SULPHIDE ZONE: Massive banded pyritic sulphides with fine-grained orange sphalerite, gray galena, minor chalcopyrite in gashes. Second sulphide zone brecciated, coarse barite breccia with pyrite, galena, sphalerite in matrix. Chalcopyrite in gashes. Altered, bleached phyllites between sulphide zones													
Detail 803.9	808.9	Massive banded pyrite sulphide. Local small-scale F2 folds in sulphides. Late Fractures filled with barite, 75% sulphide, 15-20% lead-zinc No. 1694.	5.0 /8.2	1694	803.9 808.9	808.9 817.1	5.0 —	12.75	9.23	5.00					
		Core Angle: 66° @ 806'.	5.0	1695	817.1	822.1	5.0	6.68	5.16	2.29			33.4	25.8	11.45
			5.5	1696	822.1	827.6	5.5	6.08	4.20	1.97			33.44	23.1	10.84
808.9	817.1	Bleached , altered - white quartz-sericite phyllite and gray sericite phyllite. Core Angle: 67 ° @ 812'.	/2.6		827.6	830.2	—	(0.3)	(0.3)	(0.03)	(0.6 Pb Zn, Est.)		0.78	0.7	0.078
			1.8	1697	830.2	832.0	1.8	4.13	10.89	1.74			7.43	19.60	3.13
817.1	827.6	Sulphide zone in c.g. white barite breccia. 50-70% sulphide. Some banded. Generally pyrite, gray galena, rich chalcopyrite, lead greater than zinc. 15-20% lead-zinc. No. 1695 and No. 1696. Core Angle: 71° @ 818', 71° @ 825'.	3.5	1698	832.0	835.5	3.5	3.90	7.44	1.68			13.65	26.04	5.88
				Wt. Av.	817.1	835.5	18.4	4.82	5.18	1.71	(58.5)		88.70	95.24	31.38
				" "	817.1	827.6	10.5	6.37	4.66	2.12	Weighted average (72.8)		66.84	48.90	22.29
				" "	830.2	835.5	5.3	3.98	8.61	1.70	Weighted average (58.3)		21.08	45.64	9.01
827.6	832	Pale quartz-sericite phyllite grade to mineralized graphite phyllite, No. 1697 4-6% lead-zinc. Core Angle: 47° @ 830'.													

DIAMOND DRILL RECORD

LOGGED BY S. B. Reamsbottom

PROPERTY

LATITUDE BEARING OF HOLE STARTED

DEPARTURE DIP OF HOLE COMPLETED

ELEVATION DIP TESTS DEPTH Proposed: Ultimate:

D.D.H. No. 75-A75 PAGE 13 of 16

CLAIM No.

N

DIRECTION AND DISTANCE FROM NE. CLAIM POST

FOOTAGE FROM	FOOTAGE TO	DESCRIPTION	Rec. Ft.	Sample No.	Footage From	Footage To	Sample Length	Assay Pb	Assay Zn	Assay Ag	Assay Au	Assay Cu	Assay x Feet Pb	Assay x Feet Zn	Assay x Feet Ag
832	835.5	Banded, barite rich pyrite sulphide. Good F2 fold nose @ 834'. 40-50% sulphide, 10% lead-zinc. Orange sphalerite, galena, barite. Core Angle: 57° @ 833'.													
835.5	851.0	GRAY QUARTZ - SERICITE PHYLLITE													
		Pale bleached at sulphide contact for 1 foot.	1/6.5		835.5	852.0	—								
		Core Angle: 65° @ 840', 80° @ 850'.													
851.0	861.3	SULPHIDE ZONE: BARITE - PYRITE - RED SPHALERITE - GALENA													
		50-60% sulphide, 10-12% lead-zinc													
		Well banded alternating laminae: white barite, sphalerite, pyrite.	6.6	1699	851.0	857.6	6.6	5.40	10.50	2.38			35.64	69.3	15.71
		Local zones, quartz rich c.g. xtals. Grades to mineralized black graphitic phyllite last 2 feet.	3.7	1700	857.6	861.3	3.7	4.50	8.23	1.97			16.65	30.45	7.29
		Core Anlge: 65° @ 860'.													
					851	861.3	10.3	5.08	9.68	2.23	Weighted Average, (76.6')		52.29	99.75	23.00
861.3	862.3	PALE BLEACHED QUARTZ - SERICITE - CHLORITE PHYLLITE													
		Core Angle: 75° @ 862'.	1/1.0		861.3	862.3	—								

DIAMOND DRILL RECORD

LOGGED BY S. B. Reamsbottom

PROPERTY

LATITUDE BEARING OF HOLE STARTED

DEPARTURE DIP OF HOLE COMPLETED

ELEVATION DIP TESTS DEPTH Proposed: Ultimate:

D.D.H. No. 75-A75 PAGE 14 of 16

CLAIM No.

N

DIRECTION AND DISTANCE FROM NE. CLAIM POST

FOOTAGE FROM	FOOTAGE TO	DESCRIPTION	Rec. Ft.	Sample No.	Footage From	Footage To	Sample Length	Assay Pb	Assay Zn	Assay Ag	Assay Au	Assay Cu	Assay x Feet Pb	Assay x Feet Zn	Assay x Feet Ag
862.3	869.2	SULPHIDE ZONE: Barite rich, pyrite, orange sphalerite, galena.	4.2	1701	862.3	867	4.7	4.08	7.62	2.06			19.18	35.81	9.68
		First 2 feet broken, brecciated, cemented by veins of quartz-carbonate. Last two feet well banded. 40-50% sulphide, 8-10% lead-zinc.	2.2	1702	867	869.2	2.2	5.10	8.56	2.18			11.22	18.83	4.80
				Wt. Av.	851.0	869.2	18.2	4.54	8.48	2.06	(70.6)		82.686	154.376	37.478
		Core Angle: 46° @ 865'.		" "	862.3	869.2	6.9	4.41	7.92	2.10	Weighted Average. (71.9)		30.396	54.646	14.478
869.2	941	GRAY QUARTZ - SERICITE PHYLLITE													
		Minor chlorite. Rock is more altered close to sulphide. Buff quartz-carbonate veins. Minor pyrite, pyrrhotite. Red-carbonate in foliation. Small-scale F2 folds, F2 dominant.													
		Core Angle: 75° @ 870', 74° @ 880', 84° @ 900', 20° @ 920', 67° @ 940'.													
		Quartz-chlorite veins @ 895-906', 933-935'. These also have buff carbonate.													
941	961	GRADES TO PALE GREEN-GRAY QUARTZ-CHLORITE-SERICITE PHYLLITE													
		Greater chlorite content than above, both within F2 laminae and quartz-chlorite veins . Buff feldspar crystals in quartz veins.													
		Also buff carbonate in F2 foliation. Both F2 and F1 foliation well defin ed, F1 locally subvertical to F2. Minor blebs of pyrrhotite and pyrite. Recovery good.													
		Core Angle: 75 @ 960'.													

DIAMOND DRILL RECORD

LOGGED BY S. B. Reamsbottom

PROPERTY

LATITUDE BEARING OF HOLE STARTED

DEPARTURE DIP OF HOLE COMPLETED

ELEVATION DIP TESTS DEPTH Proposed: Ultimate:

D.D.H. No. 75-A75 PAGE 15 of 16

CLAIM No.

N

DIRECTION AND DISTANCE FROM NE. CLAIM POST

FOOTAGE FROM	FOOTAGE TO	DESCRIPTION	Rec. Ft.	Sample No.	Footage From	Footage To	Sample Length	Assay Pb	Assay Zn	Assay Ag	Assay Au	Assay Cu	Assay x Feet Pb	Assay x Feet Zn	Assay x Feet Ag
961	976	MAINLY WHITE-BUFF QUARTZ - SERICITE PHYLLITE WITH ZONES RICHER IN CHLORITE Buff carbonate stringers in foliation. Thin (1-3 mm) of pyrite and pyrrhotite. Some assoc. chalcopyrite in gashes. Good F2. Good recovery. Core Angle: 82° @ 970'.													
976	1050.5	GRADES TO GRAY QUARTZ - SERICITE PHYLLITE WITH THIN (1') ZONES OF WHITE QUARTZ - SERICITE PHYLLITE Chlorite rich areas greener. Quartz-chlorite veins with brown-yellow feldspar. Recovery excellent. Minor pyrite and pyrrhotite blebs and bands. Rock more broken. Muddy from 990' onwards. F1 laminae subvertical. Well defined F2 folds in sericite-phyllite zones. Note minor marcasite. Core Angle: 85° @ 980', 76° @ 990', 52° @ 1000', 76° @ 1020', 1040 = F2 fold, 82° @ 1050'.	18/21 0.7/10	994 → 1028 →	1015 → 1038 →										
1050.5	1141	PALE WHITE QUARTZ - SERICITE PHYLLITE. SERICITE RICH. BLEACHED Minor chlorite assoc. with quartz-chlorite veins. Buff carbonate in foliation and in transverse gashes. Layers (0.5') and laminae, blebs of pyrrhotite and pyrite. Rock becomes paler, more bleached and altered from about 1080' to end. Quart veins boudined - sulphide in necks locally. Note pyrite, pyrrhotite sphalerite @ 1112'. Green chlorite, minor biotite from 1118'.	0/6 5/6		1056 1063	1062 1069									
								Good recovery last 30-50'.							

DIAMOND DRILL RECORD

LOGGED BY S. B. Reamsbottom

PROPERTY _____

LATITUDE _____ BEARING OF HOLE _____ STARTED _____

DEPARTURE _____ DIP OF HOLE _____ COMPLETED _____

ELEVATION _____ DIP TESTS _____ DEPTH Proposed: Ultimate: _____

D.D.H. No. 75-A75 PAGE 16 of 16

CLAIM No. _____

N

DIRECTION AND DISTANCE FROM

NE. CLAIM POST

FOOTAGE FROM	FOOTAGE TO	DESCRIPTION	Rec. Ft.	Sample No.	Footage From	Footage To	Sample Length	Assay .Pb	Assay Zn	Assay Ag	Assay Au	Assay Cu	Assay x Feet Pb	Assay x Feet Zn	Assay x Feet Ag
		F2 dominant foliation. F2 fold @ 1112-1120'.													
		Core Angle: 87° @ 1065', 65° @ 1080', 70° @ 1090', 85° @ 1100', 74° @ 1120', 81° @ 1140'.													
	1141	END OF HOLE													
		Note: Assay estimates possibly 1-2% over.													
		REMARKS: 1. Ground badly broken and blocky from 86-259'.													
		2. Hole cemented from 1141' up -- 12 bags of cement.													

DDH: FAGA075 -- 42 DEGREE PROFILE

(VIEW AZIMUTH = 312 DEGREES)

ELEV:1301 592328E ; 905208N

PLUNGE ANGLE IS 11.0 TREND ANGLE IS 312.0

CORRECTED COLLAR POSITION: X = 674.8 Z = 1301.9

SECTION NAME: 78W

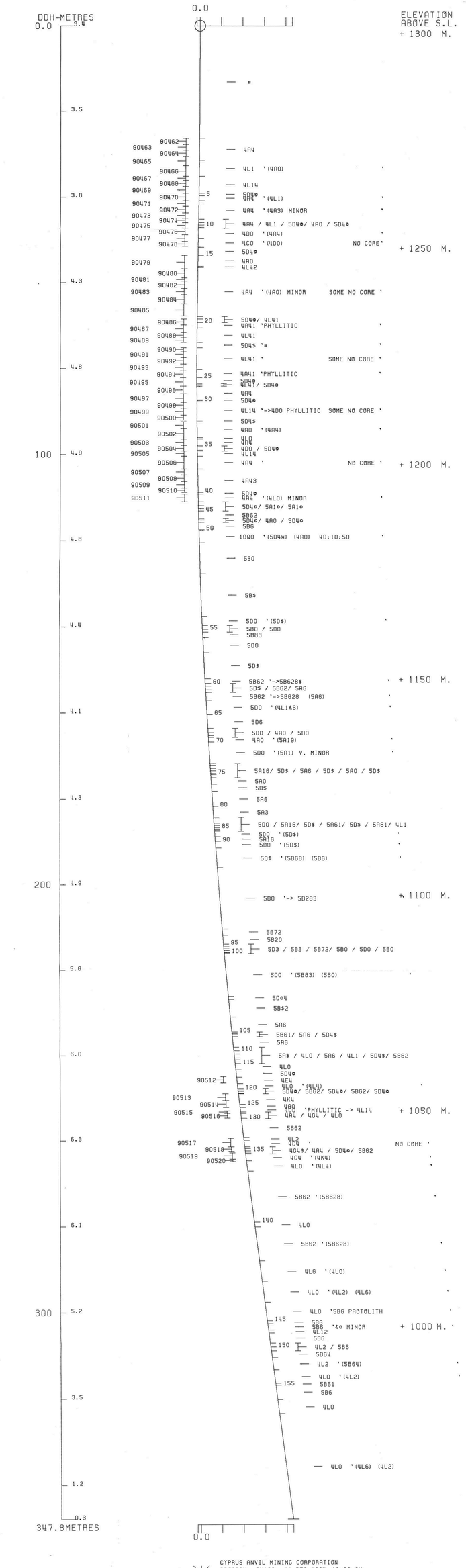

DDH: FAGA075 -- 42 DEGREE PROFILE

(VIEW AZIMUTH = 312 DEGREES)

ELEV:1301 592328E ; 905208N

PLUNGE ANGLE IS 11.0 TREND ANGLE IS 312.0

CORRECTED COLLAR POSITION: X = 674.8 Z = 1301.9

SECTION NAME: 78W

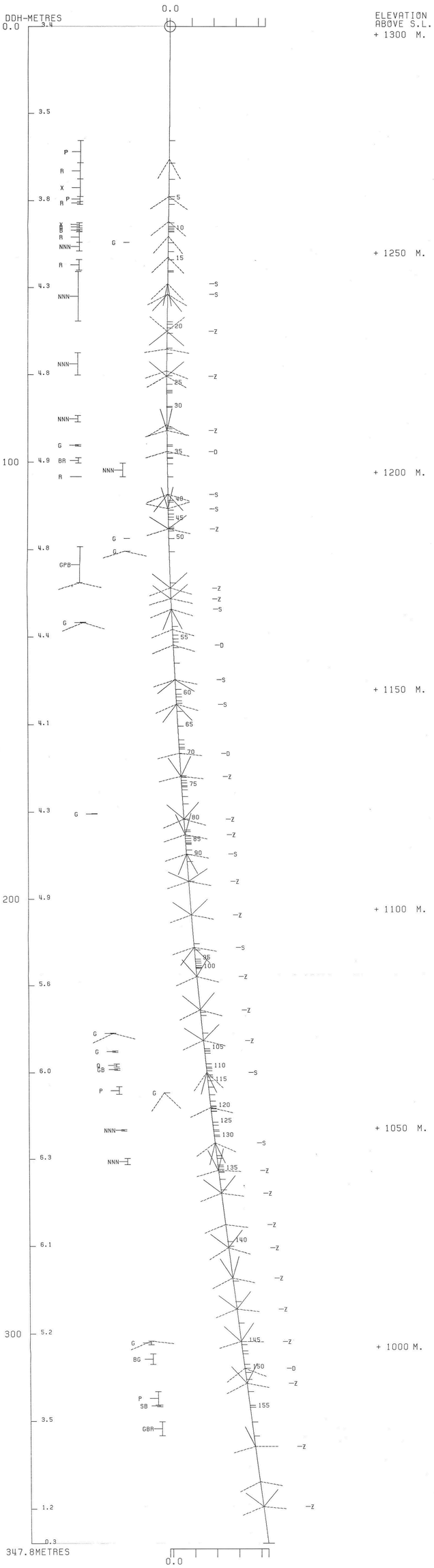

CYPRUS ANVIL MINING CORPORATION
PROGRAM DH161 11 DEC 1984 2:57 PM

FAGA076

DRILL HOLE	:	FAGA076
NORTHING	:	905,203.8
EASTING	:	592,247.0
ELEVATION	:	1,301.8
TOTAL DEPTH	:	407.1
SECTION	:	W 80
R.F.E.	:	S2
RFE DIRECTION:		230
PLUNGE ANGLE	:	11
PLUNGE DIRECT:		312
DHD CALC:		1
SS CALC:		0

DETAIL RECORD COUNTS:

NOS ORE-SAMPLES:	29
NOS DOWN-H-SURVEYS:	7
NOS DOWN-H-LITHOLOGY:	93
NOS DOWN-H-STRUCTURE:	117
NOS DOWN-H-FAULTS:	25
NOS DOWN-H-SPLINES:	7
NOS COMPOSITES:	0

DDH: FAGA076 UTM-N: 905,203.8 UTM-E: 592,247.0 UTM-ELEV: 1,301.8 TOTAL DEPTH: 407.1 SECTION: W 80
RFE: S2 RFE DIP: 230 PLUNGE ANGLES: 11 312 DHD CALC: 1 SS CALC: 0

DEPTHS FROM	TO	SAMPLE NO.	INT.	REC.	ROCK UNIT	S.G. PULP	ASSAYS CU %	PB %	ZN %	AG(AA) G/MT	AG(FA) G/MT	AU(FA) G/MT	PO %	PY %	TOT FE	BAO %	HG %	MN %	AS %	BA %	S.G. W.R.
113.1	114.0	08288	.9	.9	4DC	3.08	.04	1.84	3.60	23.00		.48	4	5	10						
114.8	116.0	08289	1.2	.5	4CC	3.29	.04	1.23	2.40	26.00		.62	8	7	15						
139.5	140.5	91029	1.0	.0	4G48			6.70	10.65		62.40										
140.5	142.1	91030	1.6	.0	4E4			4.65	7.20		66.50										
142.1	143.6	91031	1.5	.0	4A4			3.75	5.28	52.40											
144.1	145.9	08290	1.8	1.8	4A4	3.25	.04	2.30	4.00	33.00	36.00	.82	1	9	10						
145.9	147.8	08291	1.9	1.8	4A4	3.14	.05	2.60	2.80	35.00		.48	1	8	9						
147.8	149.3	08292	1.5	1.4	4A4	3.01	.04	1.99	2.30	30.00		.41	1	4	5						
251.3	252.8	08293	1.5	1.5	4D4*	3.80	.06	9.60	14.20	175.00		.62	3	9	12						
264.7	265.5	08294	.8	.7	4A4		.04	1.76	3.80	44.00											
275.1	276.2	08295	1.1	.8	4A4		.02	2.40	6.20	52.00											
280.8	281.4	08296	.6	.5	4A01		.08	1.42	2.30	32.00											
281.8	283.1	08297	1.3	1.3	4A01		.04	1.53	1.58	30.00											
284.5	285.4	91032	.9	.9	4A4			6.94	7.68	91.90											
286.8	287.4	91033	1.6	.0	4D34			5.18	4.92	63.40											
292.8	293.6	08298	.8	.7	4G4		.16	8.80	14.10	138.00											
327.6	328.3	91034	.5	.0	4DE4			6.44	11.65		68.60										
328.3	329.2	91035	.9	.0	4A10			.02	.06		1.00										
341.6	344.0	91036	2.2	.0	4DE			2.35	3.48		35.30										
364.8	366.5	91037	1.7	.0	4E46			4.35	4.44		52.40										
366.5	367.8	08299	1.3	1.3	4A4L		.02	.74	1.36		19.00										
367.8	369.4	91038	1.6	.0	4GO			3.15	3.06		40.40										
369.4	370.6	91039	1.2	.0	4GO			1.00	.31		12.00										
370.6	372.2	91040	1.6	.0	4EG			4.73	3.60		48.30										
372.2	373.4	91041	1.2	.0	4C3			1.60	.22		9.90										
373.4	374.4	91042	1.0	.0	4G08			5.37	4.20		48.30										
374.4	375.7	91043	1.3	.0	4C3			.59	.27		11.00										
375.7	377.3	91044	1.6	.0	4G08			5.03	3.66		50.40										
377.3	378.7	91045	1.4	.0	4G08			4.05	3.42		39.40										
WEIGHTED AVERAGE																					
113.1	114.0		.9	.9		3.08	.04	1.84	3.60	23.00		.48	4	5	10						
114.8	116.0		1.2	.5		3.29	.04	1.23	2.40	26.00		.62	8	7	15						
139.5	143.6		4.1	.0				4.82	7.33	19.17	41.17										
144.1	149.3		5.2	5.0		3.14	.04	2.32	3.07	32.86	12.46	.57	1	7	8						
251.3	252.8		1.5	1.5		3.80	.06	9.60	14.20	175.00		.62	3	9	12						

DDH: FAGA076 UTM-N: 905,203.8 UTM-E: 592,247.0 UTM-ELEV: 1,301.8 TOTAL DEPTH: 407.1 SECTION: W 80
RFE: S2 RFE DIR: 230 PLUNGE ANGLES: 11 312 DHD CALC: 1 SS CALC: 0

DEPTHS FROM	DEPTHS TO	SAMPLE NO.	INT.	REC.	ROCK UNIT	ASSAYS S.G. PULP	CU %	PB %	ZN %	AG(AA) G/MT	AG(FA) G/MT	AU(FA) G/MT	PO %	PY %	TOT FE	BAO %	HG %	MN %	AS %	BA %	S.G. W.R.
264.7	265.5		.8	.7			.04	1.76	3.80	44.00											
275.1	276.2		1.1	.8			.02	2.40	6.20	52.00											
280.8	281.4		.6	.5			.08	1.42	2.30	32.00											
281.8	283.1		1.3	1.3			.04	1.53	1.58	30.00											
284.5	285.4		.9	.9				6.94	7.68	91.90											
285.8	287.4		1.6	.0				5.18	4.92	63.40											
292.8	293.6		.8	.7			.16	8.80	14.10	138.00											
337.8	339.2		1.4	.0				2.31	4.19		25.14										
341.8	344.0		2.2	.0				2.35	3.48		35.30										
364.8	378.7		13.9	1.3				3.16	2.57		34.55										

DDH: FAGA076 UTM-N: 905,203.8 UTM-E: 592,247.0 UTM-ELEV: 1,301.8 TOTAL DEPTH: 407.1 SECTION: W 80
RFE: 52 RFE DIR: 230 PLUNGE ANGLES: 11 312 DHD CALC: 1 SS CALC: 0

DEPTH	ZENITH	AZIMUTH
0.000	180.000	0.000
61.600	179.000	130.500
122.500	174.000	138.500
183.500	169.700	146.400
244.500	179.000	142.500
305.400	173.000	154.400
387.700	173.000	136.500

DDH: FAGA076 UTM-N: 905,203.8 UTM-E: 592,247.0 UTM-ELEV: 1,301.8 TOTAL DEPTH: 407.1 SECTION: W 80
RFE: 52 RFE DIR: 230 PLUNGE ANGLES: 11 312 DHD CALC: 1 SS CALC: 0

DEPTH	UNIT	CODE	DESC		RECOVERY	IND
18.9	0001				0.0	1
19.2	0002	5B0			0.0	1
20.6	0003	5D3			0.0	1
29.0	0004	5B2			0.0	1
32.3	0005	5D3			0.0	1
73.5	0006	5B2			0.0	1
94.0	0007	5E0			0.0	1
95.4	0008	5D3	[5D0(4680)]		0.0	1
111.7	0009	5B80	(588$)		0.0	1
112.6	0010	5B2$			0.0	1
113.1	0011	5D6			0.0	1
114.0	0012	4DC			0.0	1
114.3	0013	5C4*			0.0	1
116.0	0014	4C0			0.0	1
121.3	0015	5B6$			0.0	1
122.6	0016	5B8$			0.0	1
124.3	0017	5D4$			0.0	1
124.8	0018	5B80	&$		0.0	1
125.5	0019	5B8$			0.0	1
127.2	0020	5B0	(5D0 &$)(10Q0)		0.0	1
128.5	0021	5DC			0.0	1
130.1	0022	5B80	(5B0)		0.0	1
132.4	0023	5DC	(5B)		0.0	1
139.5	0024	5B2$			0.0	1
140.5	0025	4G48		NO CORE	0.0	1
142.1	0026	4E4		NO CORE	0.0	1
143.6	0027	4A4		NO CORE	0.0	1
144.1	0028	5C4*			0.0	1
149.3	0029	4A4			0.0	1
151.2	0030	5D4$			0.0	1
153.0	0031	3G9	(5D4$)		0.0	1
154.3	0032	5D4$			0.0	1
171.1	0033	5AC	&$		0.0	1
181.3	0034	3GC	&9		0.0	1
183.6	0035	5A31	9		0.0	1
189.1	0036	3GC	&9		0.0	1
189.6	0037	5D4&			0.0	1
196.9	0038	3G0			0.0	1
250.7	0039	3G9	&0		0.0	1
251.3	0040	4L0			0.0	1
252.8	0041	4D4#	(4L3)		0.0	1
261.1	0042	3G0	&9		0.0	1
264.7	0043	5B2$	(5A$&9)		0.0	1
265.5	0044	4A4			0.0	1
271.1	0045	5B2$	(5A$)		0.0	1
275.1	0046	3G9	&0		0.0	1
276.2	0047	4A4			0.0	1
280.8	0048	3G0	&9		0.0	1
281.4	0049	4A01			0.0	1
281.8	0050	4LC			0.0	1
283.1	0051	4AC4			0.0	1

DDH: FAGA076 UTM-N: 905,203.8 UTM-E: 592,247.0 UTM-ELEV: 1,301.8 TOTAL DEPTH: 407.1 SECTION: W 80
RFE: 52 RFE DIR: 230 PLUNGE ANGLES: 11 312 DHD CALC: 1 SS CALC: 0

DEPTH	UNIT	CODE	DESC		RECOVERY	IND
284.5	0052	5B26			0.C	1
285.4	0053	4A4		NO CORE	0.C	1
285.8	0054	5A9			0.C	1
287.4	0055	4D34		NO CORE	0.C	1
288.6	0056	5E26			0.C	1
292.3	0057	4L2			0.C	1
293.6	0058	4G4			0.C	1
322.7	0059	3GC	(10QC)(5D4$)		0.C	1
323.5	0060	4L27			0.C	1
325.5	0061	3G9			0.C	1
326.4	0062	5C4$			0.C	1
326.3	0063	4AC			0.C	1
331.7	0064	5C4$			0.C	1
333.1	0065	5A9			0.C	1
333.3	0066	5C4$	(5D4$)		0.C	1
337.8	0067	4AC	->5A19		0.C	1
338.3	0068	4D43	5[4E4]		0.C	1
339.2	0069	4A10			0.C	1
339.9	0070	5A1	(435)		0.C	1
340.5	0071	5C4			0.C	1
341.8	0072	5A6	(4L)(4A)		0.C	1
342.3	0073	4D43	[4E4]		0.C	1
342.6	0074	4LC	(10QC)		0.C	1
344.0	0075	4D14			0.C	1
348.4	0076	3GC			0.C	1
351.4	0077	4LC	(CQC)(4B4?) MINOR		0.C	1
358.4	0078	3GC			0.C	1
364.6	0079	4LC			0.C	1
365.2	0080	4E46	[4G4]		0.C	1
366.1	0081	4LC		NO CORE	0.C	1
366.5	0082	4E46	[4G4]		0.C	1
367.3	0083	4LC			0.C	1
367.8	0084	4A4			0.C	1
369.2	0085	4G08			0.C	1
370.6	0086	4G80			0.C	1
372.2	0087	4EG		NO CORE	0.C	1
373.4	0088	4C3			0.C	1
374.4	0089	4G08		NO CORE	0.C	1
375.7	0090	4C3			0.C	1
378.7	0091	4G80		NO CORE	0.C	1
404.2	0092	4L27			0.C	1
407.2	0093	5B6			0.5-	1

DDH: FAGA076 UTM-N: 905,203.8 UTM-E: 592,247.0 UTM-ELEV: 1,301.8 TOTAL DEPTH: 407.1 SECTION: W 80
RFE: S2 RFE DIR: 230 PLUNGE ANGLES: 11 312 DHD CALC: 1 SS CALC: 0

DDH	F DEPTH	T DEPTH	FEAT	SYMTRY	S0 ANGLE	S0 DIRECT	S1 ANGLE	S1 DIRECT	S2 ANGLE	S2 DIRECT	RFE CDE	DHDC	SDC	PROCESS
FAGA076	0.0	20.6	CS2		0	0	0	0	70	230	0	1	0	0
FAGA076	0.0	25.0	CS2		0	0	0	0	69	230	0	1	0	0
FAGA076	0.0	29.0	CS2		0	0	0	0	74	230	0	1	0	0
FAGA076	0.0	33.3	CS2		0	0	0	0	80	230	0	1	0	0
FAGA076	0.0	38.0	CS2		0	0	0	0	74	230	0	1	0	0
FAGA076	0.0	42.3	CS2		0	0	0	0	69	230	0	1	0	0
FAGA076	0.0	46.9	CS2		0	0	0	0	63	230	0	1	0	0
FAGA076	0.0	51.2	CS2		0	0	0	0	65	230	0	1	0	0
FAGA076	0.0	56.0	CS2		0	0	0	0	80	230	0	1	0	0
FAGA076	0.0	60.3	CS2		0	0	0	0	60	230	0	1	0	0
FAGA076	0.0	64.9	CS2		0	0	0	0	61	230	0	1	0	0
FAGA076	0.0	69.2	CS2		0	0	0	0	68	230	0	1	0	0
FAGA076	0.0	75.3	CS2		0	0	0	0	80	230	0	1	0	0
FAGA076	0.0	80.2	CS2		0	0	0	0	55	230	0	1	0	0
FAGA076	1.9	81.4	CS2	S	0	0	0	0	0	0	0	1	0	0
FAGA076	0.0	84.3	CS2		0	0	0	0	65	230	0	1	0	0
FAGA076	81.4	84.8	CS2	Z	0	0	0	0	0	0	0	1	0	0
FAGA076	0.0	87.6	CS2		0	0	0	0	63	230	0	1	0	0
FAGA076	0.0	90.3	CS2		0	0	0	0	40	230	0	1	0	0
FAGA076	0.0	93.6	CS2		0	0	0	0	50	230	0	1	0	0
FAGA076	0.0	96.6	CS2		0	0	0	0	60	230	0	1	0	0
FAGA076	84.8	100.5	CS2	M	0	0	0	0	0	0	0	1	0	0
FAGA076	0.0	101.2	CS2		0	0	0	0	66	230	0	1	0	0
FAGA076	0.0	106.7	CS2		0	0	0	0	67	230	0	1	0	0
FAGA076	0.0	110.9	CS2		0	0	0	0	70	230	0	1	0	0
FAGA076	100.5	112.9	CS2	S	0	0	0	0	0	0	0	1	0	0
FAGA076	0.0	113.7	CS2		0	0	0	0	60	230	0	1	0	0
FAGA076	0.0	118.4	CS2		0	0	0	0	70	230	0	1	0	0
FAGA076	0.0	122.8	CS2		0	0	0	0	65	230	0	1	0	0
FAGA076	112.9	125.9	CS2	D	0	0	0	0	0	0	0	1	0	0
FAGA076	0.0	127.5	CS2		0	0	0	0	70	230	0	1	0	0
FAGA076	0.0	130.8	CS2		0	0	0	0	60	230	0	1	0	0
FAGA076	125.9	133.7	CS2	S	0	0	0	0	0	0	0	1	0	0
FAGA076	0.0	134.4	CS2		0	0	0	0	70	230	0	1	0	0
FAGA076	0.0	137.2	CS2		0	0	0	0	60	230	0	1	0	0
FAGA076	0.0	144.8	PS2		0	0	0	0	60	230	0	1	0	0
FAGA076	0.0	147.5	PS2		0	0	0	0	60	230	0	1	0	0
FAGA076	143.6	149.7	PS2	P	0	0	0	0	0	0	0	1	0	0
FAGA076	0.0	152.1	CS2		0	0	0	0	73	230	0	1	0	0
FAGA076	0.0	155.2	CS2		0	0	0	0	62	230	0	1	0	0
FAGA076	0.0	159.9	CS2		0	0	0	0	80	230	0	1	0	0
FAGA076	149.7	160.4	CS2	D	0	0	0	0	0	0	0	1	0	0
FAGA076	0.0	164.4	CS2		0	0	0	0	73	230	0	1	0	0
FAGA076	0.0	168.9	CS2		0	0	0	0	70	230	0	1	0	0
FAGA076	0.0	173.4	CS2		0	0	0	0	75	230	0	1	0	0
FAGA076	160.4	174.3	CS2	S	0	0	0	0	0	0	0	1	0	0
FAGA076	0.0	178.0	CS2		0	0	0	0	84	230	0	1	0	0
FAGA076	174.3	182.5	CS2	Z	0	0	0	0	0	0	0	1	0	0
FAGA076	0.0	183.3	CS2		0	0	0	0	75	230	0	1	0	0
FAGA076	0.0	185.0	CS2		0	0	0	0	80	230	0	1	0	0
FAGA076	0.0	186.2	CS2		0	0	0	0	78	230	0	1	0	0

DDH: FAGA076 UTM-N: 905,203.8 UTM-E: 592,247.0 UTM-ELEV: 1,301.8 TOTAL DEPTH: 407.1 SECTION: W 80
RFE: S2 RFE DIR: 230 PLUNGE ANGLES: 11 312 DHD CALC: 1 SS CALC: 0

DDH	F DEPTH	T DEPTH	FEAT	SYMTRY	S0 ANGLE	S0 DIRECT	S1 ANGLE	S1 DIRECT	S2 ANGLE	S2 DIRECT	RFE CDE	DHDC	SDC	PROCESS
FAGA076	182.5	187.3	CS2	S	0	0	0	0	0	0	0	1	0	0
FAGA076	0.0	190.8	CS2		0	0	0	0	75	230	0	1	0	0
FAGA076	187.3	193.2	CS2	Z	0	0	0	0	0	0	0	1	0	0
FAGA076	0.0	194.9	CS2		0	0	0	0	56	230	0	1	0	0
FAGA076	0.0	199.4	CS2		0	0	0	0	70	230	0	1	0	0
FAGA076	0.0	203.9	CS2		0	0	0	0	67	230	0	1	0	0
FAGA076	0.0	208.5	CS2		0	0	0	0	66	230	0	1	0	0
FAGA076	0.0	212.7	CS2		0	0	0	0	70	230	0	1	0	0
FAGA076	0.0	217.3	CS2		0	0	0	0	74	230	0	1	0	0
FAGA076	0.0	222.0	CS2		0	0	0	0	74	230	0	1	0	0
FAGA076	193.2	225.9	CS2	S	0	0	0	0	0	0	0	1	0	0
FAGA076	0.0	226.2	CS2		0	0	0	0	78	230	0	1	0	0
FAGA076	0.0	230.5	CS2		0	0	0	0	80	230	0	1	0	0
FAGA076	225.9	233.0	CS2	M	0	0	0	0	0	0	0	1	0	0
FAGA076	0.0	235.0	CS2		0	0	0	0	84	230	0	1	0	0
FAGA076	233.0	235.9	PS2	P	0	0	0	0	0	0	0	1	0	0
FAGA076	0.0	238.9	CS2		0	0	0	0	70	230	0	1	0	0
FAGA076	235.9	241.0	CS2	M	0	0	0	0	0	0	0	1	0	0
FAGA076	0.0	243.2	CS2		0	0	0	0	78	230	0	1	0	0
FAGA076	0.0	247.8	CS2		0	0	0	0	78	230	0	1	0	0
FAGA076	241.0	250.7	CS2	Z	0	0	0	0	0	0	0	1	0	0
FAGA076	0.0	251.1	PS2		0	0	0	0	72	230	0	1	0	0
FAGA076	250.7	252.8	PS2	P	0	0	0	0	0	0	0	1	0	0
FAGA076	0.0	255.4	CS2		0	0	0	0	76	230	0	1	0	0
FAGA076	252.8	259.1	CS2	M	0	0	0	0	0	0	0	1	0	0
FAGA076	0.0	260.0	PS2		0	0	0	0	77	230	0	1	0	0
FAGA076	259.1	263.9	PS2	P	0	0	0	0	0	0	0	1	0	0
FAGA076	0.0	264.6	CS2		0	0	0	0	73	230	0	1	0	0
FAGA076	0.0	269.1	CS2		0	0	0	0	69	230	0	1	0	0
FAGA076	0.0	273.4	CS2		0	0	0	0	69	230	0	1	0	0
FAGA076	0.0	278.0	CS2		0	0	0	0	76	230	0	1	0	0
FAGA076	0.0	282.7	CS2		0	0	0	0	70	230	0	1	0	0
FAGA076	263.9	285.8	CS2	S	0	0	0	0	0	0	0	1	0	0
FAGA076	0.0	288.0	PS2		0	0	0	0	70	230	0	1	0	0
FAGA076	0.0	291.4	PS2		0	0	0	0	60	230	0	1	0	0
FAGA076	285.8	293.8	PS2	P	0	0	0	0	0	0	0	1	0	0
FAGA076	0.0	294.9	CS2		0	0	0	0	60	230	0	1	0	0
FAGA076	0.0	302.1	CS2		0	0	0	0	75	230	0	1	0	0
FAGA076	0.0	306.6	CS2		0	0	0	0	70	230	0	1	0	0
FAGA076	0.0	311.0	CS2		0	0	0	0	62	230	0	1	0	0
FAGA076	0.0	315.5	CS2		0	0	0	0	76	230	0	1	0	0
FAGA076	293.8	315.9	CS2	S	0	0	0	0	0	0	0	1	0	0
FAGA076	0.0	320.5	CS2		0	0	0	0	65	230	0	1	0	0
FAGA076	315.9	322.6	CS2	Z	0	0	0	0	0	0	0	1	0	0
FAGA076	0.0	324.4	PS2		0	0	0	0	60	230	0	1	0	0
FAGA076	0.0	328.9	PS2		0	0	0	0	65	230	0	1	0	0
FAGA076	0.0	332.9	PS2		0	0	0	0	70	230	0	1	0	0
FAGA076	0.0	337.1	PS2		0	0	0	0	68	230	0	1	0	0
FAGA076	322.6	340.8	PS2	P	0	0	0	0	0	0	0	1	0	0
FAGA076	0.0	341.2	CS2		0	0	0	0	74	230	0	1	0	0
FAGA076	0.0	345.6	CS2		0	0	0	0	60	230	0	1	0	0

DDH: FAGA076 UTM-N: 905,203.8 UTM-E: 592,247.0 UTM-ELEV: 1,301.8 TOTAL DEPTH: 407.1 SECTION: W 80
RFE: S2 RFE DIR: 230 PLUNGE ANGLES: 11 312 DHD CALC: 1 SS CALC: 0

DDH	F DEPTH	T DEPTH	FEAT	SYMTRY	S0 ANGLE	S0 DIRECT	S1 ANGLE	S1 DIRECT	S2 ANGLE	S2 DIRECT	RFE CDE	DHDC	SDC	PROCESS
FAGA076	340.9	345.9	CS2	Z	0	0	0	0	0	0	0	1	0	0
FAGA076	345.9	348.7	PS2	P	0	0	0	0	0	0	0	1	0	0
FAGA076	0.0	350.4	CS2		0	0	0	0	73	230	0	1	0	0
FAGA076	348.7	354.5	CS2	M	0	0	0	0	0	0	0	1	0	0
FAGA076	0.0	354.8	CS2		0	0	0	0	70	230	0	1	0	0
FAGA076	0.0	359.4	CS2		0	0	0	0	70	230	0	1	0	0
FAGA076	0.0	362.7	CS2		0	0	0	0	70	230	0	1	0	0
FAGA076	354.5	364.8	CS2	S	0	0	0	0	0	0	0	1	0	0
FAGA076	0.0	367.3	PS2		0	0	0	0	74	230	0	1	0	0
FAGA076	0.0	381.0	PS2		0	0	0	0	68	230	0	1	0	0
FAGA076	0.0	385.3	PS2		0	0	0	0	70	230	0	1	0	0
FAGA076	0.0	393.0	PS2		0	0	0	0	69	230	0	1	0	0
FAGA076	0.0	399.1	PS2		0	0	0	0	70	230	0	1	0	0
FAGA076	0.0	405.1	PS2		0	0	0	0	70	230	0	1	0	0
FAGA076	364.8	407.2	PS2	P	0	0	0	0	0	0	0	1	0	1

DDH: FAGA076 UTM-N: 905,203.8 UTM-E: 592,247.0 UTM-ELEV: 1,301.8 TOTAL DEPTH: 407.1 SECTION: W 80
RFE: S2 RFE DIR: 230 PLUNGE ANGLES: 11 312 DHD CALC: 1 SS CALC: 0

DDH	F DEPTH	T DEPTH	FEAT	REC CD	PARLL	UPPER PLANE		INTERNAL PLANE		LOWER PLANE		DHD
FAGA076	32.3	32.9	RG?			0	0	0	0	0	3	1
FAGA076	0.0	65.2	1X			0	0	0	0	0	3	1
FAGA076	71.3	72.2	BG			0	0	0	0	0	3	1
FAGA076	72.2	72.8	G			0	0	0	0	0	3	1
FAGA076	72.8	73.4	GF?			0	0	0	0	0	3	1
FAGA076	74.6	75.2	P	0		0	0	0	0	0	3	1
FAGA076	0.0	94.0	BP	5		0	0	0	0	0	3	1
FAGA076	94.0	96.0	BP	3		0	0	0	0	0	3	1
FAGA076	103.3	105.9	BP	4		0	0	0	0	0	3	1
FAGA076	115.9	121.3	BGP			0	0	0	0	0	3	1
FAGA076	118.8	122.5	BP	2		0	0	0	0	0	3	1
FAGA076	136.3	139.5	G3F			60	0	60	0	0	3	1
FAGA076	139.5	143.5	NNN			0	0	0	0	0	3	1
FAGA076	0.0	148.8	G			0	0	0	0	0	3	1
FAGA076	246.8	247.1	BG			0	0	0	0	0	3	1
FAGA076	284.4	285.3	NNN			0	0	0	0	0	3	1
FAGA076	285.8	287.3	NNN			0	0	0	0	0	3	1
FAGA076	0.0	295.9	G			0	0	60	0	0	3	1
FAGA076	326.4	328.2				0	0	0	0	0	3	1
FAGA076	340.9	341.1	GF?			0	0	0	0	0	3	1
FAGA076	341.1	341.3	XF?			0	0	0	0	0	3	1
FAGA076	364.8	366.5	NNN			0	0	0	0	0	3	1
FAGA076	370.6	372.1	NNN			0	0	0	0	0	3	1
FAGA076	373.3	374.4	NNN			0	0	0	0	0	3	1
FAGA076	375.6	378.7	NNN			0	0	0	0	0	3	1

CYPRUS ANVIL MINING CORPORATION

DIAMOND DRILL CORE LOG

Hole Number: 75-A76

Project: Grum Relog

Location: Vangorda Plateau

Claim: _____

UTM ~~Terr~~. Plane Co-ords.: 6905203.83 N

1979 HIW Survey 592246.97 E

Grid Co-ords.: 80 W / 8N

_____

1979 HIW Survey Elevation: 1301.77

Total Depth: 1336ft (407.21)

Purpose: _____

Fabric Orientation Diagram:

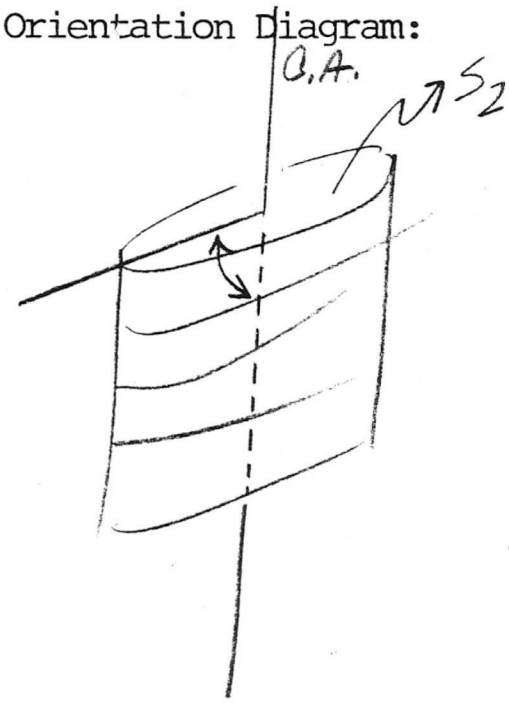

All symmetry determinations looking

NW with S_2 dipping

SW with dip azimuth 230.

RC Logged by: JSM Date(s) Logged: June 16 - June 20 1980

Drilling Contractor: _____

Core: Size	From	To
BQ	62	EOH

Collar Cased and Capped: ____

Started: May 17, 1975 Completed: May 26, 1975

Cyprus Anvil Mining Corp.
Diamond Drill Core Log

DDH 75-A076
(2 – 8)

Code	Drillhole	Elevation	Northing	Easting	Comments
1	2 – 8	10 – 16	17 – 24	25 – 32	34 – 48
T	75-A076	1301.8	9052038.8	592247.0	FEET

Code	Drillhole	Depth	Zenith Angle	True Azimuth	Comments
1	2 – 8	10 – 14	22 – 26	28 – 32	34 – 56
R	75-A076	0.0	180.0	0.0	AT COLLAR
R	75-A076	2012.0	179.0	130.5	TROPARI
R	75-A076	4012.0	174.0	138.5	
R	75-A076	6012.0	169.7	146.4	
R	75-A076	8012.0	179.0	142.5	
R	75-A076	10012.0	173.0	154.4	
R	75-A076	12172.0	173.0	136.5	
R			.	.	
R			.	.	
R			.	.	
R			.	.	
R			.	.	
R			.	.	
R			.	.	
R			.	.	

Code	Drillhole	Comments, Errant Remarks, Snivellings and/or Lewd Suggestions
1	2 – 8	10 – 47
		SECTIONS COMPLETELY SAMPLED FO
		MET TESTS

DDH 75-A076 (2 … 8)

Cyprus Anvil Mining Corp.
Lithologic Log

Logged By: JSM

Code	From	To	Unit	Code	Description
1	10 14	16 20	22 23	25 27	
L	000	6200	1		O/B
L	6200	6300	2	5B0	3/4" py cube above lower ctc
L	6300	6755	3	5D3	massive w/ cc bands
L	6755	9533	4	5B2	w/ qtz boudins, py blebs up to 1/2", note non-laminated, gray calcareous layers folded (S_o // S_1)
L	9533	10600	5	5D3	strongly calcareous (ankeritic), massive w/ cc bands, minor dissem py along irregular cc-filled fractures,
L	10600	24100	6	5B2	as unit A, 106-108 = rubbly + clay altered (fault? depositional? diagenetic? metamorphic?) py blebs assoc w/ qtz boudins OQO up to 1.0' usu. w/ $CO_3^=$ slightly chloritic when not carbon-rich increasingly carbonaceous 141.0-160.0 ~ (→5A) $CO_3^=$ is both cc & ankerite minor auto brxiation @ 214.0 w/ some ankerite fracture filling 234-237 broken + gouge; 237-239 gouge; 239-241 OQO+$CO_3^=$ = fault?
L	24100	30855	7	5B0	both cc + ankerite, wash out 245-247, @EOI OQO + broken recovery, (<50% recovery)
L	30855	31644	8	5D3	308.5-315.0 (2.8 ft recovery) = broken + altered (sericite chlorite + Fe oxide), could be 5B, 5D or gradational ctc 315.0-316.4 good recovery, massive green w/ cc bands
L	31644	31665	9	5B8	both cc + ankerite, 339-347.5 ⇒ 2.3 ft recovery 0.9 ft OQO @ 360'
L	31665	31695	10	5B2	6 → 5A
L	31695	37100	11	5D6	Fe stained + sfd (py) rich to 370, strong clay + mariposite alteration to 3710
L	37100	37400	12	4C0	red sphal, galena + py bands in white qtz, <5% Pb Zn
L	37400	37677	13	5D4 *mot	strong mariposite alteration, texture reminiscent of mottled 5D
L	37677	38055	14	4C0	small ugly sfd zone w/ secondary py + topped by massive py <5% Pb Zn
L	38055	39800	15	5A6	(5B26) completely broken recovery. Gouge @ top & bottom of section.
L	39800	40222	16	5B0	only 1.2' recovered
L	40222	40777	17	5D3	

W/ 1/10 Re/09 DSV

5CB0 5CB* dolo) 5B2* dolo

5B* dolo

5B8*dol 5D4*dol.

DDH 75-A076 (2 8)

Cyprus Anvil Mining Corp.
Lithologic Log

Logged By: JSM

Code	From	To	Unit	Code	Description
1	10 14	16 20	22 23	25 27	
L	407 7	409 6	18	5B8	
L	409 6	411 6	19	5D3	
L	411 6	417 3	20	5B2	interbed of 5D @ 414', 5B2 @ TOI → 5B8, cc + ankerite
L	417 3	421 6	21	5D3	massive w/ cc bands
L	421 6	426 7	22	5B2	8 as unit 20
L	426 7	434 4	23	5D3	w/ 5B interbeds 428.4 - 429.5, 433.3 - 433.8
L	434 4	457 8	24	5B2	→ 5A @ EOI (broken) 454 to 457.8 gouge broken core // S_2 major fault
L	457 8	461 0	25	~~4D4~~	Changed to 4E48 by intuition 8 No core KA sample # 1584 massive sfd pyrite, red sphal, qtz eyes, black mgt, 75% sfd 10-15% PbZn"
L	461 0	466 2	26	~~4D0~~	? Changed to 4E4 as above No core KA sample # 1585 "massive sfd, banded; py sphal, minor po, locally bxiated, 70% sfd 15-20% PbZn"
	466 2	471 0	27	4A4	? No core KA sample # 1586 "15-20% sfd, 9% PbZn"
L	471 0	472 8	28	5~~D~~C4 3	*mot strong mariposite alteration @ TOI then 5D3 ankeritic → of mottled 5D ? or 5D43 mot
L	472 8	489 9	29	4A4	~6% PbZn, red sphal + gal; Minor 4C0 in narrow interbands <10% of unit
L	489 9	496 0	30	5D3	ankerite, minor mariposite blebs // gouge at 488.4 / 5' // 14
L	496 0	502 0	31	5A0	2/6" interbds of 5D3 ankeritic, minor py
L	502 0	506 3	32	5D3	ankeritic, w/ minor py (stringers // S_1 // S_2 and veinlets), minor mariposite blebs & OQO (5D34 JSM)
L	506 3	561 5	33	5A6	minor py blebs laminae + veinlets + po same, up to 1" blebs, OQO @ 507-508, 509-510, 517, occasional phyllite clasts, only minor $CO_3^=$
L	561 5	594 8	34	5B6	(2)
L	594 8	602 5	35	5A3	minor po → 5A6 @ EOI
L	602 5	620 5	36	5B6	(2) as unit 33 - 34 ??
L	620 5	622 0	37	5D6	altered, sericite + Fe stain
L	622 0	822 5	38	5B6	(2) TOI → 4L (sericite developed but not really white) spotty sericite bleaching continues to ~675 sometimes assoc w OQO (qtz veins up to 3ft long, fractures w/in OQO contain py + po, some massive po) Unit becomes a uniform gray thinly banded non-calcareous phyllite; calcareous interval @ 745, occasional OQO; minor py + po; thin interbed of calcareous 5D (?) @ 791.5 Less carbonaceous material 801.5 - 810.0, broken & gouge 810 - 811
L	822 5	824 5	39	4L0	non calcareous, altered 5B

DDH 75-A076 (2 8)

Cyprus Anvil Mining Corp.
Lithologic Log

Logged By: JSM

	Code	From		To		Unit	Code	Description
	1	10	14	16	20	22 23	25 27	
NB *	L	824	5	829	5	40	4D4	* (4L3) ·5' bands 4L @ 825' & 828.5 minor CO_3" clots thru out section.
360 ±2	L	829	5	856	7	41	5B6	(2) as unit 37 w/ thin Fe-oxide laminae, minor qtz bands
5B2 *dol (5A*dol)	L	856	7	868	5	42	5A6	minor py (+ red sphal @ 866.5) minor OQO, gradational
								in spots w/ 5B26 and w/ a sfd poor 4A elsewhere.
	L	868	5	871	0	43	4A0	<5% sfd py + red sphal Not split by K.A.
5B2 *dol (5A*dol)	L	871	0	889	5	44	5A6	SAME as above unit in fold. → 5B26 w/ 6" 4A as unit 42 @ EOI w/ OQO,
	L							massive po @ 882, minor py
369±0	L	889	5	902	5	45	5B2	6
	L	902	5	906	2	46	4A4	(1) red sphal + galena, ~20% sfd, 6-8% PbZn graphitic
360±9	L	906	2	921	3	47	5B2	6 minor py blebs, OQO up to 0.5ft
	L	921	3	923	1	48	4A4	1 py, red sphal, galena ~5% PbZn
	L	923	1	924	7	49	4L0	
	L	924	7	928	9	50	4A4	1 as unit 47 losing PbZn below 927.5 → 5A4
	L	928	9	933	3	51	5B2	6 bleached near OQO
	L	933	3	936	3	52	4A4	? No core KA sample # 1593 "band. sfd in phyllite gangue
								50-60% sfd 15% PbZn"
	L	936	3	937	7	53	5A9	<1% PbZn red sphal, galena, py
	L	937	7	942	9	54	~~4D0~~	? → 4D3 range 40% sfd No core KA sample # 1594 "40% sfd, pyrite, sphal,
								galena, minor cpy, 10% PbZn
	L	942	9	946	7	55	5B2	6 loses carbon + gains sericite downinterval, minor py
	L	946	7	960	7	56	4L2	minor py, sph laminae to 949.5 1' qtz vein @ 955 & 2' qtz vein @ EO 1
	L	960	7	963	2	57	4G4	split minor honey colored sphal, galena, ~70% py.
								(KA assays say 9.5% Pb 14.4% Zn ??)
								extremely fine grained → altered 5B
360(OQO) (5D4*dol)	L	963	2	1058	7	58	5B2	1.0ft @ TOI = 4L 5B26 6" gouge // S_2 @ 971
								967.3 - 990.7 BOX 36 missing
								some sericite, minor py
4L27	L	1058	7	1061	5	59	4L0	minor po + py (4L27)
369	L	1061	5	1068	0	60	5B2	6
5C4* Vol fuchite	L	1068	0	1071	0	61	5~~D~~C~~3~~4	* mot cc + ankerite mariposite blebs + laminae, altered mottled 5D
4A0	L	1071	0	1077	0	62	5A9	py, bxiated along stp fractures and filled w/ $CO_3^=$
5C4*	L	1077	0	1088	2	63	5~~D~~(3)	5C * mot + mass slightly calcareous (slow fizz) mottled 5D to 1087.4
								then massive ankeritic w/ minor mariposite (5D43)
	L	1088	2	1092	8	64	5A9	4L @ TOI (6"), then 2.0ft OQO, then 1.7ft 5A9 minor py
5C4* mot 5D4*		1092	8	1095	0	65	5~~D~~C6	mostly mottled, note 2" band @ 1093.5 w/ soft angular
								dark fragments (phyllite?) in soft white non calc matrix w/

DDH 75-A076 (2–8)

Cyprus Anvil Mining Corp.

Lithologic Log

Logged By: JSM

Code	From		To		Unit	Code	Description
1	10	14	16	20	22 23	25 27	
							po dissem through frags + as bleb in matrix
							→ AL @ EOI
L	1 1 0 9 5	0	1 1 0 8	4	6 6	4 A 0	→ 5A91 (because banding is too even & regular to be 4A) in spots
							py = only sfd visible, some porphyroblastic (5mm).
							Concentrations of remobilized py near fractures
L	1 1 0 8	4	1 1 0 9	9	6 7	~~4 D 4~~ 4D435 [4E47]	red sphal, gal, py. 70-80% sfd, ~20% PbZn
L	1 1 0 9	9	1 1 1 3	0	6 8	4 A 1	py = only sfd visible
L	1 1 1 3	0	1 1 1 5	3	6 9	5 A 6	? This interval is strongly iron-stained due to large (3")
							po concentrations so the rock type is hard to
							identify, maybe 5B2. minor py blebs
L	1 1 1 5	3	1 1 1 7	2	7 0	5 D 6 E4	mot mottled w/ minor mariposite $CO_3^=$ fracture fills
L	1 1 1 7	2	1 1 2 1	4	7 1	5 A 6	top 1.4 ft is good 5A then → bleached red sphalerite-bearing 4A,
							then → 4L, then 0.8ft broken gouge, then 0.5ft
							of bxia w/ graphite matrix & clasts (angular) of massive
							py and of qtz. Fault?
L	1 1 2 1	4	1 1 2 2	9	7 2	~~4 D 4~~ 4D43 [4E47]	honey-sphalerite, galena + py, 70% sfd, ~6% PbZn
L	1 1 2 2	9	1 1 2 4	0	7 3	4 L 0	+ QQQ
L	1 1 2 2	9	1 1 2 8	6	7 4	4 D 1	4 orange → red sphal, gal + py ~6% PbZn
							more siliceous down interval, interbdd w/ 5D?
L	1 1 2 8	6	1 1 4 3	2	7 5	5 B 6	
L	1 1 4 3	2	1 1 5 3	0	7 6	4 L 0	note sfd zone 1.0 ft @ 1145 (1.5" po bands @ top & bottom w/
							scattered py porphyroblasts. 4B4 w/ red sphal & gal
							in center of zone)
							minor py blebs, esp near QQQ
L	1 1 5 3	0	1 1 7 6	0	7 7	5 B 6	some sericite development
L	1 1 7 6	0	1 1 9 7	0	7 8	4 L 0	w/ py blebs + fracture fillings
							→ 4L6 last 10.0 ft (still highly altered but green chlorite
							instead of white sericite)
L	1 1 9 7	0	1 1 9 8	0	7 9	~~4 E 4~~ 4E46	No core KA sample # 1600 "sulfide zone: bxia massive
L	1 1 9 8	0	1 2 0 1	0	8 0	~~4 L 0~~ 504*	sfd w/ parting of bleached quartz sericite phyllite
L	1 2 0 1	0	1 2 0 2	5	8 1	~~4 E 4~~ 4E46	@ 1198-1201 (4L) Sfd 50-70% py, 15-20% PbZn;
							avg 10% over section; barite + gypsum in fractures"
							(AG?)
L	1 2 0 2	5	1 2 0 5	0	8 2	4 L 0	
L	1 2 0 5	0	1 2 0 6	7	8 3	4 A 4	<5% red sphal + galena 2" AL @ EOI

DDH 75-A076 (2 8)

Cyprus Anvil Mining Corp.
Lithologic Log

Logged By: JSM

	Code	From	To	Unit	Code	Description
	1	10 14	16 20	22 23	25 27	
VS	L	1206 7	1211 2	84	4G4	80% sfd: py (po @ TOI) orange sphalerite galena, ~6% PbZn 4G4 8 JM
						mgt blebs ~1-2%, some bxiated fractures w/ cc filling mgt throughout
NS	L	1211 2	1216 0	85	4G0	v. fine grained, ~1% PbZn, minor mgt blebs, 4G8 JM
						vuggy fractures v. minor cpy (?) in units 83+84
KA	L	1216 0	1221 0	86	4EG	No core KA sample # 1903 massive banded sfd 80% sfd
						8% PbZn
N	L	1221 0	1225 0	87	~~4C1~~ 4C3	~50% sfd, 1-2% PbZn, banded
						yellowed $CO_3^=$ bands esp below 1223.5
						vugs filled w/ barite rosettes
KA	L	1225 0	1228 5	88	4G4	No core KA sample #1905 "banded sfd 50-60% sfd
						7.5% PbZn, note mgt + bands of white barite" 4G4 8 JM
						? could be $CO_3^=$ as in 86
N	L	1228 5	1232 5	89	~~4C0~~ 4C3	~50% sfd <1% PbZn (sphal + gal visible @ 1230.5)
						KA logged minor mgt, po, cpy – no longer visible
						Note: box 47 1228.5-1250.7 broken core jumbled
	L	1232 5	1242 5	90	4G0	No core KA sample #1907-1908 "banded sfd in qtz sericite
						gangue, banding obvious due to dark pyrrhotite
						mgt + sphal, veins of white barite, 1-2% mgt."
						4G8 JM
	L	1242 5	1326 0	91	4L0	py + po
						biotite-rich 1282-1287
	L	1326 0	1336 0	92	5B6	

3T-98
8
84

DDH 75-A076 (2 / 8)

Cyprus Anvil Mining Corp.
Structural Log

Logged By: JSM

Code	From	To	Feature	Sym	S_1 Dip Direct.	S_2 Dip Direct.	Description
1	10 14	16 20	22 24	26	28 32	34 38	
S		162					O/B
S		1676	CS2			7102310	S region 62.0 - 267.2
S		1820	CS2			692310	well defined
S		1950	CS2			742310	
S		11094	CS2			802310	
S		12147	CS2			742310	
S		13189	CS2			692310	
S		14538	CS2			632310	
S		15680	CS2			652310	
S		16838	CS2			802310	
S		17978	CS2			602310	
S		21129	CS2			612310	
S		22270	CS2			682310	
S		23470	CS2			802310	
S		24630	CS2			552310	
S		24672	F2	E			Z region 267.2-278.3
S		24767	CS2			652310	
S		24833	F2	Z			M region 278.3 - 329.7
S		24873	CS2			632310	~ 70% Z sym
S		25962	CS2			402310	
S		26070	CS2			502310	
S		26169	CS2			602310	
S		26297	F2	M			S region 329.7 - 370.3
S		26320	CS2			662310	
S		26500	CS2			672310	
S		26638	CS2			702310	
S		26703	F2	S			D region 370.3 - 413.2
S		26730	CS2			602310	D sym 371, & 405-413
S		26884	CS2			702310	371.5-405 sfds + mottled SD
S		27030	CS2			652310	∴ indeterminate (R?)
S		27132	F2	D			S region 413.2 - 430.5
S		27184	CS2			702310	
S		27290	CS2			602310	
S		27385	F2	S			symmetry indeterminate 438.5 - 457.8
S		27410	CS2			702310	due to F_4 kinking of S_2
S		27500	CS2			602310	

DDH 75-A076 (2 / 8)

Cyprus Anvil Mining Corp.
Structural Log

Logged By: JSM

Code	From	To	Feature	Sym	S_1 Dip Direct.	S_2 Dip Direct.	Description
1	10 14	16 20	22 24	26	28 32	34 38	
S		45778	F2	?			No core no sym 457.8 - 471.0
S		47100	F2	?			R(?) region 471.0-491.0
S		47500	PS2			6021310	banded sfds + some SD
S		48400	PS2			60 2310	
S		49100	F2	R			D region 491.0 - 526.2
S		49900	CS2			73 2310	SD + SB + SA
S		50693	CS2			62 2310	
S		51245	CS2			80 2310	
S		51262	F2	D			S region 526.2 - 571.8
S		51393	CS2			73 2310	
S		51540	CS2			70 2310	
S		5169	CS2			75 2310	
S		51718	F2	E			Z region 571.0 - 598.6
S		51840	CS2			84 2310	
S		59806	F23				S region 598.6 - 614.6
S		60150	CS2			75 2310	
S		60168	CS2			80 2310	
S		61100	CS2			78 2310	
S		61A46	F2	E			Z region 614.6 - 633.8
S		62160	CS2			75 2310	
S		63368	F23				S region 633.8 - 741.2
S		63940	CS2			56 2310	
S		65A30	CS2			70 2310	
S		66900	CS2			67 2310	
S		68A20	CS2			66 2310	
S		69780	CS2			70 2310	
S		71300	CS2			74 2310	
S		72840	CS2			7A 2310	
S		74120	F2	S			M region 741.2 - 764.5
S		74A20	CS2			78 2310	
S		75630	CS2			80 2310	
S		76A45	F2	M			P region 764.5 774.0
S		77090	CS2			8A 2310	
S		77A40	F2	P			M region 774.0 - 790.6
S		78370	CS2			70 2310	
S		79060	F2	M			Z region 790.6 - 821.0

DDH Z5-A076 (2 … 8)

Cyprus Anvil Mining Corp.
Structural Log

Logged By: JSM

Code	From	To	Feature	Sym	S_1 Dip Direct.	S_2 Dip Direct.	Description
1	10 14	16 20	22 24	26	28 32	34 38	
S		7980	CS2			7823 0	
S		8130	CS2			7823 0	
S		8225	F2	Z			R region 822.5-829.5
S		82377	PS2			7223 0	banded sfd + AL
S		8295	F2	R			M region 829.5 - 850.0
S		8380	CS2			7623 0	
S		8500	F2	M			P region 850.0 865.8
S		8530	PS2			7723 0	some D sym
S		8658	F2	P			S region 865.8 - 937.7
S		8680	CS2			7323 1	
S		8829	CS2			6923 0	
S		8970	CS2			6923 0	
S		9120	CS2			7623 0	
S		9275	CS2			7023 0	
S		9377	F2	S			R region ? 937.7 964.0
S		9450	PS2			7023 0	missing core, banded sfds + AL
S		9560	PS2			6023 0	
S		9640	F2	R			S region 964.0 - 1036.4
S		9675	CS2			6023 0	→ corebox missing
S		9910	CS2			7523 0	TOI poorly defined sym because
S		10060	CS2			7023 0	of missing box ∴ → P to 1000
S		10105	CS2			6223 0	
S		10350	CS2			7623 0	
S		10364	F2	E			Z region 1036.4 - 1058.5
S		10515	CS2			6523 0	
S		10585	F2	Z			P region 1058.5 - 1118.0
S		10644	PS2			6023 0	5B, 4A, 5D, 5A
S		10790	PS2			6523 0	Z sym 1095.9-1097.4
S		10923	PS2			7023 0	S sym 1106.0
S		11060	PS2			6823 0	
S		11180	F2	P			Z region 1118.0 - 1135.0
S		11195	CS2			7423 0	
S		11340	CS2			6023 0	
S		11350	F2	Z			P region 1135.0 - 1144.0
S		11440	F2	P			m region 1144.0 - 1163.0
S		11495	CS2			7323 0	

DDH 75-A076 (2 / 8)

Cyprus A[illegible] Mining Corp.

Structural Log

Page 11

Logged By: →

Code	From	To	Feature	Sym	S_1 Dip Direct	S_2 Dip Direct.	Description
1	10 14	16 20	22 24	26	28 32	34 38	
S		1163.0	F2	M			S region 1163-1197
S		1164.0	CS2			710 230	not well defined until EOI
S		1179.0	CS2			710 230	
S		1190.0	CS2			710 230	
S		1197.0	F2	S			P region? 1197-EOH
S		1205.0	PS2			7A 230	sfds missing core, 4L, 5B → should it be called R?
S		1250.0	PS2			618 230	
S		1264.0	PS2			710 230	
S		1289.5	PS2			619 230	
S		1309.5	PS2			710 230	
S		1329.0	PS2			710 230	

DDH FAGA076 (2 Feet 8)

Cyprus Anvil Mining Corp.

Structural Log

Page _____ of _____

Date: _____ Logged By: _____

Code	From	To	Feature	Sym	S_0 Dip Direct.	S_1 Dip Direct.	S_2 Dip Direct	Description
1	10 14	16 20	22 24	26	28 32	34 38	40 44	
F	1060	1080	RG?					rubbly & clay altered
		2140	1X					bxia
	2340	2370	BG					broken & gougy
	2370	2390	G					gouge
	2390	2410	QF?					OQO + CO_3 = fault?
	2450	2470	P	0				wash out
		3085	BP	5				< 50% recy
	3085	3150	BP	3				2.8' recy
	3390	3475	BP	4				2.3' "
	3805	3980	BGP					gouge @ top & base, broken core
	3900	4022	BP	2				1.2' recy.
	4540	4578	G3F		60 RFE		60 OFE	gouge // S_2, broken core
		4884	G					" 0.5'
	8100	8110	BG					broken and gouged
		9710	G			60 OFE		gouge, 6" // S_2
	10710	10770	X					bxia, $CO_3^=$ filled along steep fracs.
	11186	11194	GF?					gouge & broken core
	11194	11199	XF?					bxia
	4578	4710	NNN					
	9333	9363	NNN					
	9377	9429	NNN					
	11970	12025	NNN					
	12160	12210	NNN					
	12250	12285	NNN					
	12325	12425	NNN					

DDH 75-A076 Cyprus Anvil Mining Corp

Page 12 of 14

Logged by PST

ASSAY LOG (SAMPLER'S COPY) Date Aug 5/81 Sampled by

Feet

CODE	FROM	TO	SAMPLE	INTR.	REC (m)	UNIT	DESCRIPTION KERR ADD
1	10 14	16 20	22 26	28 30	32 34	36 40	42
P	3710	3740	8288	30	30	4CO	
P	3767	3805	8289	38	18	4CO	
P	4578	4610	91029	32	32	4D48	K.A. sampled. No core left! 1584
P	4610	4662	91030	52	43	4D0	? " " " " 1585
P	4662	4710	91031	48	48	4A4	" " " " 1586
P	4728	4788	8290	60	60	4A4	(4CO)
P	4788	4848	8291	60	59	4A4	(4CO)
P	4848	4899	8292	51	47	4A4	(4CO)
P	8245	8295	8293	50	48	4D4*	(423)
P	8685	8710	8294	25	25	4AO	
P	9025	9062	8295	37	25	4A41	
P	9213	9231	8296	18	18	4A41	
P	9247	9289	8297	42	42	4A41	
P	9333	9363	91032	30	39	4A4	K.A. Sampled. No core left 1593
P	9377	9429	91033	52	52	4D9	" " " " 1594
P	9607	9632	8298	25	25	4G4	
P	10847	10999	91034	15	15	4D4	Core missing. " " 1597
P	10999	11130	91035	31	31	4A1	" " " 1598
P	11214	11286	91036	73	73	4D41	(4LO) KA Sampled No core 599 left
P	11970	12025	91037	53	50	4E4	(4LO) K.A. Sampled. No core left 1600
P	12050	12067	8299	17	17	4A4	
P	12067	12112	91038	53	53	4G4	K.A. Sampled. No core left. 1901
P	12112	12160	91039	40	40	4GO	" " " " 1902
P	12160	12210	91040	50	50	4EG	" " " " 1903
P	12210	12250	91041	40	40	4C1	" " " " 1904

why not 933 as per KA?

If the core is missing how can you change KA footages?

should be 12120

C.A.M.C. 1981 - E - 5

Note: 91032 → 91039 include some inexplicable differences from original KA assay footages

91038-39 have been corrected as seem to be transcription error

DDH 75-A076 Cyprus Anvil Mining Corp

Page 13 of 14

Logged by

ASSAY LOG (SAMPLER'S COPY) Date Aug 5/81 Sampled by

feet

CODE	FROM	TO	SAMPLE	INTR.	REC (m)	UNIT	DESCRIPTION
1	10 14	16 20	22 26	28 30	32 34	36 40	42
P	1250	1285	911042	35	35	494	K.A. Sampled No core 1905
P	1285	1325	911043	40	40	4C0	" " " 1906
P	1325	1380	911044	55	55	490	" " 1907
P	1380	1425	911045	45	45	490	" " 1908
							End of Hole @ 1336'
							NB K refers to K.A. Sample No.

DDH 75-AU76 (2 / 8)

Cyprus Anvil Mining Corp.
Geochemical Log (Sampler's Copy)

Logged By: JSM

Sampled By:

Code	From	To	Sample No.	Description		
1	10 14	16 20	22 27	Length	Recovered	Unit
P	13710	13740	111581 2	KA 3.0	3.0	4B4
P	13785	13805	111581 3	KA 2.0	2.0	4B4
P	14578	14610	111581 4	KA 3.2	3.2	* 4D8?
P	14610	14662	111581 5	KA 5.2	4.3	* 4D0?
P	14662	14710	111581 6	KA 4.8	4.8	* 4A4?
P	14729	14786	111581 7	KA 5.8	5.8	4A4
P	14786	14826	111581 8	KA 4.0	4.0	4AA
P	14826	14899	111581 9	KA 7.3	7.3	4AA
P	18242	18295	111591 0	KA 5.3	5.3	4D4
P	19003	19063	111591 1	KA 6.0	6.0	5B26→4AA1
P	19213	19263	111591 2	KA 5.0	5.0	4AA1→4L→4AA1
P	19334	19363	111591 3	KA 2.9	2.9	* 4?
P	19377	19430	111591 4	KA 5.3	5.3	* 4?
P	19607	19632	111591 5	KA 2.5	2.5	4G4
P	111054	111084	111591 6	KA 3.0	3.0	4A
P	111084	111101	111591 7	KA 1.7	1.7	4D4
P	111101	111131	111598	KA 3.0	3.0	4A
P	111210	111285	111599	KA 7.5	7.5	4D4→4L→4D24
P	111970	112023	112010	KA 5.3	5.0	4EA +4L
P	112067	112120	112011	KA 5.3	5.3	4G4
P	112120	112160	112012	KA 4.0	4.0	4G
P	112160	112210	112013	KA 5.0	5.0	* 4E? 4G?
P	112210	112250	112014	KA 5.0	5.0	4C1
P	112250	112285	112015	KA 3.5	3.5	* 4D?
P	112285	112325	112016	KA 4.0	4.0	4C
P	112325	112380	112017	KA 5.5	5.5	4D
P	112380	112425	112018	KA 4.5	4.5	4D

* No core left due to met tests.

DIAMOND DRILL RECORD

LOGGED BY S. D. Ramsbottom

PROPERTY VANGORDA, GRUM JOINT VENTURE

D.D.H. No. 75-A76 PAGE 1 of 12

LATITUDE Line Grid 7 + 96N (6 HIW) 35085.21N (10,998.7'N)

DEPARTURE 79 + 94W 24801.56E (7559.52'E)

ELEVATION 4264' 4305.71' (1312.38') DIP TESTS

BEARING OF HOLE BY TROPARI
202' -- 129° 50'
402' -- 137° 50'
602' -- 145° 44'
802' -- 141° 50'
1002' -- 153° 44'
1272' -- 136°

DIP OF HOLE BY TROPARI
202' -- -89°
402' -- -84°
802' -- -79° 45'
1002' -- -83°
1272' -- -83°

STARTED May 17, 1975 D.S.

COMPLETED May 26, 1975 D.S.

Proposed:
DEPTH Ultimate: 1336' (407.21m)

HOLE SIZE BW 0 - 62'
BQ 62 -1336'

CLAIM No.

DIRECTION AND DISTANCE FROM NE. CLAIM POST

FOOTAGE FROM	FOOTAGE TO	DESCRIPTION	Rec. Ft.	Sample No.	Footage From	Footage To	Sample Length	Assay Pb	Assay Zn	Assay Ag	Assay Au	Assay Cu	Assay x Feet Pb	Assay x Feet Zn	Assay x Feet Ag
0	62 (15.1)	OVERBURDEN													
62	67.5 (20.6)	GREEN-GRAY, QUARTZ - CHLORITE - SERICITE PHYLLITE													
		Abundant thin (1-2 mm) white quartz carbonate veins. Massive texture. Core Angle: 60°.													
67.5	94.3 (25.7)	DARK GRAY, QUARTZ - SERICITE - GRAPHITE PHYLLITE													
		Rock well laminated. More graphitic 83-91'. Thin quartz laminae altered with micaceous laminae. Minor pyrite.	2/5		73	78									
		Core Angle: 70' = 76°, 80' = 69°, 90' = 76°. (21.3 24.4 21--)													
94.3	106 (32.3)	PALE, QUARTZ - SERICITE - PHYLLITE. MINOR CHLORITE													
		Quite massive texture as sericite rich. Thin (2-3 mm) white quartz carbonate veins in foliation. Core Angle 100' = 70°.													
		F2 folds defined by quartz carbonate layers. Recovery good.													
106	134 (40.8)	GRAY QUARTZ - SERICITE PHYLLITE													
		Good F2, F1 subvertical. Blebs of pyrite marcasite. Grades to graphite phyllite. Good F1-F2 laminae. Note, F3 kinks @ 129'.	1.5/2	Mud	106	108									
		Core Angle: 110' = 76°, 120' = 72°, 130' = 75°. (33.5 36.6 34.6)													

DIAMOND DRILL RECORD

LOGGED BY S. B. Reamsbottom

PROPERTY _____

LATITUDE _____ BEARING OF HOLE _____ STARTED _____

DEPARTURE _____ DIP OF HOLE _____ COMPLETED _____

ELEVATION _____ DIP TESTS _____ DEPTH Proposed: Ultimate: _____

D.D.H. No. 75-A76 PAGE 2 of 12

CLAIM No. _____

DIRECTION AND DISTANCE FROM NE. CLAIM POST

FOOTAGE FROM	FOOTAGE TO	DESCRIPTION	Rec. Ft.	Sample No.	Footage From	Footage To	Sample Length	Assay Pb	Assay Zn	Assay Ag	Assay Au	Assay Cu	Assay x Feet Pb	Assay x Feet Zn	Assay x Feet Ag
40.3 134	50.6 166	BLACK STRIPED CONTORED GRAPHITE-PHYLLITE													
		Again good F1-F2 relationships. F1 subvertical to F2. Many small-scale F2 folds. Blebs of pyrite. Veins with crystalline calcium carbonate.		Excellent Recovery											
		Core Angle: 140' = 75°, 150' = 67°, 160' = 63°, F2 folds. 42.1 45.1 48.7													
166	111.7 366.5	DARK GRAY, STRIPED QUARTZ - SERICITE PHYLLITE. MINOR GRAPHITE													
		Faint greenish tinge where chlorite rich except 300-350'. Same structure features as above - good F1-F2 etc.	0.5/2	Wash Out	245	247									
		Quartz veins at 179', 181', 185' and 204-206'. Creamy carbaonate in these. Blebs of pyrite, marcasite throughout. Many F2 folds	1/4		258	262									
		240-260'. F3, F2 lineations sub-parallel. Good recovery. Core Angle: 170' = 70 , F2 folds. F1 subvertical. 180' = 56°,	3.8/ 10		286	296									
		200' = 72° good F2 folds, 210' = 85°, 210' = 67°, 220' = 76°, 230' = 60°, 240' = mud, 250' = 72°, 280' = 60°, 270' = 67°, 280'	3.2/ 10		296	306									
		= 57°, 300' = 67°, 320' = 76°, 330' = 85°, F1 subvertical, 340' = 78°, 350' = 72°, 360' = 75°.	2/6		309	315						Recovery Poor.			
		Note: 328' -- F2-F3 fold axis plus lineations perpendicular.	4/6		320	326						Rock broken, gouged.			
			2.9/6		338	343									
			0.5/ 3.0		344	347.6									
366.5	112.6 369.5	BLACK, CONTORTED QUARTZ - GRAPHITE PHYLLITE													
		Minor blebs of pyrite.													

DIAMOND DRILL RECORD

LOGGED BY S. B. Reamsbottom

PROPERTY _____

LATITUDE _____ BEARING OF HOLE _____ STARTED _____

DEPARTURE _____ DIP OF HOLE _____ COMPLETED _____

ELEVATION _____ DIP TESTS _____ DEPTH Proposed: Ultimate: _____

D.D.H. No. 75-A76 PAGE 3 of 12

CLAIM No. _____

N ← DIRECTION AND DISTANCE FROM NE. CLAIM POST

FOOTAGE FROM	FOOTAGE TO	DESCRIPTION	Rec. Ft.	Sample No.	Footage From	Footage To	Sample Length	Assay Pb	Assay Zn	Assay Ag	Assay Au	Assay Cu	Assay x Feet Pb	Assay x Feet Zn	Assay x Feet Ag
112.6 369.5	116.0 380.6	SULPHIDE ZONE: MARIPOSITE PHYLLITE GRADES TO QUARTZITIC													
		SERICITE PHYLLITE WITH RED SPHALERITE, MINOR PYRITE, GALENA. Quartzitic phylllite parted by mariposite phyllite. Brecciated	3	1582	371.0	374.0	3.0	2.10	4.44	.59					
		last few feet. Note late tension gashes filled with pyrite, sphalerite.	1.5/45		374.0	378.5	—								
		No. 1582 -- quartz rich sericite phyllite (almost quartzite) - 8% sulphide, 4-5% lead-zinc	2	1583	378.5	380.5	2.0	1.50	2.46	.68					
		No. 1583 -- quartz rich sericite phyllite, brecciated, infilled carbonate, 3-4.5% sulphide, 2% lead-zinc	"												
		Core Angle: 370' = 70°.													
380.6	121.3 398	DARK GRAY MODERATELY GRAPHITIC PHYLLITE													
		Poor recovery, rock broken.	1.2/4.5		380.5	385									
		Core Angle: 380' = 65°, 390' = 80°.	1.3/4.5		385	389.5									
			2.7/4.5		389.5	394									
			0.4/4		394	398									
398	132.4 434.5	PALE GREEN-GRAY QUARTZ - SERICITE PHYLLITE WITH LOCAL GREEN CHLORITE			Good Recovery										
		Creamy colour due to buff-cream quartz carbonate veins and laminae. Quartz-chlorite veins. Quartz laminae (2-3 mm) define F1. Rock more chloritic from 415 to end of section.													
		Core Angle: 400' = 75°, 410' = 75°, 420' = 70° / 430' = 82° / F2 folds.													

DIAMOND DRILL RECORD

LOGGED BY S. B. Reamsbottom

PROPERTY

LATITUDE BEARING OF HOLE STARTED

DEPARTURE DIP OF HOLE COMPLETED

ELEVATION DIP TESTS DEPTH Proposed: Ultimate:

D.D.H. No. 75-A76 PAGE 4 of 12

CLAIM No.

DIRECTION AND DISTANCE FROM NE. CLAIM POST

FOOTAGE FROM	FOOTAGE TO	DESCRIPTION	Rec. Ft.	Sample No.	Footage From	Footage To	Sample Length	Assay Pb	Assay Zn	Assay Ag	Assay Au	Assay Cu	Assay x Feet Pb	Assay x Feet Zn	Assay x Feet Ag
132.4 434.5	135.6 445	DARK GRAY QUARTZ - SERICITE PHYLLITE -- STRIPED, CRENULATED													
		Many F2, F3 folds. Note late kink, box-type F3, deform F2 folds and slip surfaces.		Recovery Good.											
		Core Angle: 440' = 64°.													
445	131.5 457.8	BLACK STRIPED QUARTZ - GRAPHITE PHYLLITE													
		Essentially same rock as above with more graphite. Same structural features. Minor pyrite. Rocks muddy from 444-447'.		Good Recovery.											
		Core Angle: 76° @ 445'.													
457.8	149.3 489.9	SULPHIDE ZONE													
		Upper 8-10 feet of more massive banded pyrite sulphide, red sphalerite, pyrrhotite in first few feet. Grades to striped	3.2	1584	457.8	461	3.2	6.70	10.65	1.82			21.44	34.08	5.82
		mineralized quartz-graphite phyllite with sulphides concentrated	4.3	1585	461	466.2	5.2	4.65	7.20	1.94			24.18	37.44	10.09
		mainly in F2 laminae. Thin green mariposite-sericite-carbonate													
		phyllite partings. Within phyllite grade varies 2-3% lead-zinc	4.8	1586	466.2	471	4.8	3.75	5.28	1.53			18.00	25.344	7.344
		to 8% lead-zinc. Note, vertical post mineralized small-scale													
		faults.	1.8		471	472.8	—	Mariposite phyllite							
		No. 1584 -- M.S. - pyrite, red sphalerite, quartz-eyes, black			2										
		magnetite, 75% sulphide, 10-15% lead-zinc	5.8	1587	478.8	478.6	5.8	2.23	3.84	.88			12.93	22.27	5.10
		No. 1585 -- M.S. -- banded: pyrite, sphalerite, minor pyrrhotite													
		Locally thin brecciated zones. 70% sulphide, 15-20% lead-zinc	4	1588	478.6	482.6	4.0	2.63	3.48	.82			10.52	13.92	3.28
		No. 1586 -- Mineralized, striped quartz-graphite phyllite, 15-20% sulphide, 8% lead-zinc, blebs of galena	7.3	1589	482.6	489.9	7.3	1.90	1.68	.71					
		No. 1587 -- Mineralized striped quartz-graphite phyllite, 10-15% sulphide, 6-8% lead-zinc													
		No. 1588 -- Mineralized striped quartz-graphite phyllite, 10-15% sulphide, 8% lead-zinc		Wt. Av	457.8	471.0	13.2	4.82	7.34	1.76	(60.4 oz/ton)		63.62	96.864	23.256

DIAMOND DRILL RECORD

LOGGED BY S. B. Reamsbottom

PROPERTY _____

LATITUDE _____ BEARING OF HOLE _____ STARTED _____

DEPARTURE _____ DIP OF HOLE _____ COMPLETED _____

ELEVATION _____ DIP TESTS _____ DEPTH Proposed: Ultimate: _____

D.D.H. No. 75-A76 PAGE 5 of 12

CLAIM No. _____

N

DIRECTION AND DISTANCE FROM NE. CLAIM POST

FOOTAGE FROM	FOOTAGE TO	DESCRIPTION	Rec. Ft.	Sample No.	Footage From	Footage To	Sample Length	Assay Pb	Assay Zn	Assay Ag	Assay Au	Assay Cu	Assay x Feet Pb	Assay x Feet Zn	Assay x Feet Ag
		No. 1589 -- quartz-graphite phyllite - 5% sulphide, 2- 3% lead-zinc.									Weighted Average				
		Core Angle: 60° @ 480'.			472.8	482.6	9.8	2.39	3.69	.86	(2.3)		23.45	36.19	8.38
149.3	154.8														
489.9	508	ZONE OF CREAMY-WHITE QUARTZ - SERICITE - MARIPOSITE PHYLLITE													
		WITH PARTINGS OF BLACK QUARTZ - GRAPHITE PHYLLITE													
		Pale phyllites altered, minor green mariposite. Good F2 folds.													
		Minor pyrite, red sphalerite in F2 planes in graphite phyllite.													
		Core Angle: 490' = 75-85°, vertical F1, folded by F2, 500 ' =													
		80°. F1 subvertical.													
508	170.9 561	BLACK,STRIPED QUARTZ - GRAPHITE PHYLLITE													
		Many F2. Contorted. Slip planes also folded. Blebs of pyrite		Recovery Good.											
		and pyrrhotite, pyrite mantles pyrrhotite. Rock quartz veined,													
		broken from 508-514'.													
		Core Angle: 510' = 75°, 520' = 75°, F2 folds, 530' = 75°, 540'													
		= 70°, 550' = 75°, 560' = 72°, F2 folds.													
561	181.2 594.5	GRAY QUARTZ - SERICITE PHYLLITE													
		Clean. F1 closely spaced, dominant. F1 subvertical. Minor		Recovery Good.											
		pyrite-pyrrhotite. Very phyllitic, few quartz laminae. Chlorite													
		concentrated locally in quartz veins.													
		Core Angle: 570' = 75°, 580' = 82°, 590' = 85°.													

DIAMOND DRILL RECORD

LOGGED BY S. B. Reamsbottom

PROPERTY

LATITUDE BEARING OF HOLE STARTED

DEPARTURE DIP OF HOLE COMPLETED

ELEVATION DIP TESTS DEPTH Proposed: Ultimate:

D.D.H. No. 75-A76 PAGE 6 of 12

CLAIM No.

N

DIRECTION AND DISTANCE FROM NE. CLAIM POST

FOOTAGE FROM	FOOTAGE TO	DESCRIPTION	Rec. Ft.	Sample No.	Footage From	Footage To	Sample Length	Assay Pb	Assay Zn	Assay Ag	Assay Au	Assay Cu	Assay x Feet Pb	Assay x Feet Zn	Assay x Feet Ag
181.2 594.5	183.6 602.5	BLACK STRIPED QUARTZ - GRAPHITE PHYLLITE													
		Good F2 folds defined by alternating quartz-graphite laminae. Note, concentration of red sphalerite in foliation. Minor pyrite-pyrrhotite. Note, rehealed brecciated graphitic phyllite @ 599'. Healed by quartz-feldspar veins with minor pyrite. Core Angle: 70° @ 600'.		Excellent Recovery.										
602.5	251.2 824.2	GRAY QUARTZ - SERICITE PHYLLITE													
		Same as unit above (561-594.5') Minor pyrite blebs. Core Angle: 610' = 74°, 620' = 74°, 630' = 66°, 640' = 60°, 660' = 80°, 670' = 67°. Note: quartz veins (1-2") at 634-665'. In this zone phyllite sericite rich. Also has minor chlorite. Pyrrhotite blebs in quartz veins - 657'.		Excellent Recovery										
		Unit becomes broken at 698-716'. Note thick monotenous section. Minor chlorite 670' on. Rock bleached last 3 feet to sulphide.	1.5/6		698	704		Tube failed to lock.							
		Core Angle: 680' = 72°, 690' = 70°, 700' = 75°, 710' = 65°, 720' = 80°, local F2 fold noses, 730' = 87°, 740' = 84°, 750' =	1.4/2		704	706									
		76°, 760' = 82°, 770' = 78°, 780' = 72°, 790' = 72°, 800' = 75°, 810' = 70°, 820' = 65°. Rock muddy at 810-811'.	1/2		706	708									
824.2	252.8 829.5	SULPHIDE ZONE													
		Massive banded red sphalerite-pyrite-galena with thin (0.5') partings of quartz-sericite phyllite. Minor pyrrhotite. Quartz-barite (?) sericite gangue. 60-70% sulphide, 20% lead-zinc. Core Angle: 79° @ 825'.	5.3	1590	824.2	829.5	5.3	9.34	13.23	4.12			49.5	70.1	21.8

DIAMOND DRILL RECORD

LOGGED BY S. B. Reamsbottom

PROPERTY _____

LATITUDE _____ BEARING OF HOLE _____ STARTED _____

DEPARTURE _____ DIP OF HOLE _____ COMPLETED _____

ELEVATION _____ DIP TESTS _____ DEPTH Proposed: Ultimate: _____

D.D.H. No. 75-A76 PAGE 7 of 12

CLAIM No. _____

N ← DIRECTION AND DISTANCE FROM NE. CLAIM POST

FOOTAGE FROM	FOOTAGE TO	DESCRIPTION	Rec. Ft.	Sample No.	Sample Footage From	Sample Footage To	Sample Length	Assay Pb	Assay Zn	Assay Ag	Assay Au	Assay Cu	Assay x Feet Pb	Assay x Feet Zn	Assay x Feet Ag
252.8 829.5	251.7 852	GRAY QUARTZ - SERICITE PHYLLITE													
		Slightly bleached 1 foot next sulphide. F2 foliation dominant ; minor pyrite-pyrrhotite.													
		Core Angle: 830' = 89°, 840' = 78°, 850' = 74°.													
852	276.7 908	DARK GRAY-BLACK STRIPED QUARTZ - GRAPHITIC PHYLLITE													
		1-2% sulphide at 868-871'. Fine grained red sphalerite, pyrite, galena and minor pyrrhotite. F2 folds well formed. Minor													
		sphalerite-pyrite-galena @ ~~889—889.7~~	/07		889	889.7		6-8 lead-zinc estimate							
		Core Angle: 860' = 79°, 870' = 80° / F2 fold noses, good F2 slip.													
		Better zone of sulphide 900.3-906.3'.													
		No. 1591 -- weak mineralized graphite phyllite - 6% sulphide, 3-4% lead-zinc	6	1591	900.3	906.3	6.0	2.45	5.52	1.32					
		Core Angle: 880' = 72°, F2 folds, 890' = 80°, 900' = 74°, 910' = 79°.													
908	280.8 921.3	GRAY QUARTZ - SERICITE PHYLLITE													
		Core Angle: 920' = 61°.													
921.3	287.4 943	SULPHIDE ZONE													
		Mainly mineralized quartz-graphite phyllites with partings of slightly bleached gray quartz-sericite phyllite. Within	5.0	1592	921.3	926.3	5.0	2.30	3.18	1.03					
		sulphide sections content varies 5-50%. Mainly red sphalerite pyrite - galena (fine-grained)	/7.1 2.9	1593	926.3 933.4	933.4 936.3	— 2.9	6.94	7.68	2.68			20.126	22.272	7.772

DIAMOND DRILL RECORD

LOGGED BY S. B. Reamsbottom

PROPERTY

LATITUDE BEARING OF HOLE STARTED

DEPARTURE DIP OF HOLE COMPLETED

ELEVATION DIP TESTS DEPTH Proposed: Ultimate:

D.D.H. No. 75-A76 PAGE 8 of 12

CLAIM No.

DIRECTION AND DISTANCE FROM NE. CLAIM POST

FOOTAGE FROM	FOOTAGE TO	DESCRIPTION	Rec. Ft.	Sample No.	Footage From	Footage To	Sample Length	Assay Pb	Assay Zn	Assay Ag	Assay Au	Assay Cu	Assay x Feet Pb	Assay x Feet Zn	Assay x Feet Ag
								(0.2)	(0.3)	(0.03)	←use				
		No. 1592 -- Mineralized striped quartz-graphite phyllite, 5-6% sulphide, 3% lead-zinc			936.3	937.7		0.5%	lead-zinc	estimate			.28	.42	.042
		No. 1593 -- band sulphide in phyllite gangue - 50-60% sulphide, 10% lead-zinc	5.3	1594	937.7	943	5.3	5.18	4.92	1.85			27.454	26.076	9.805
		No. 1594 -- 40% sulphide, pyrite, sphalerite, galena, minor chalcopyrite, 10% lead-zinc		Wt. Av.	933.4	943.0	9.6	4.99	5.08	1.84 (62.9)			47.860	48.768	17.619
287.+ 943	292.8 960.7	BLEACHED WHITE QUARTZ - SERICITE PHYLLITE													
		With abundant quartz veins (1-2') Minor pyrite in foliation. Core Angle: 940' = 75°, 950' = 82°, 960' = 70°.	17.7		943.0	960.7	—								
960.7	293.4 963.2	MASSIVE BANDED PYRITIC SULPHIDE													
		Good F2 folds. 70-90% sulphide; pyrite, red sphalerite, galena. 20% lead-zinc.	2.5	1595	960.7	963.2	2.5	9.45	14.36	3.38					
963.2	323.5 1060	GRAY QUARTZ - SERICITE PHYLLITE													
		With thin (0.5') bands of cream quartz-sericite phyllite. Quartz veins with minor chlorite. Blebs, stringers of pyrite.													
		Core Angle: 970' = 45°, 980' = 62°, 990' = 83°, 1000' = 83°, 1010' = 76°, 1020' = 72°, 1030' = 76°, many F2 folds, 1040' = 80°, 1050' = 71°, 1060' = 75°.													
		Note, bleached quartz-sericite phyllite (1059-1061.5')													

DIAMOND DRILL RECORD

LOGGED BY S. B. Reamsbottom

PROPERTY

LATITUDE BEARING OF HOLE STARTED

DEPARTURE DIP OF HOLE COMPLETED

ELEVATION DIP TESTS DEPTH Proposed: Ultimate:

D.D.H. No. 75-A76 PAGE 9 of 12

CLAIM No.

N

DIRECTION AND DISTANCE FROM NE. CLAIM POST

FOOTAGE FROM	FOOTAGE TO	DESCRIPTION	Rec. Ft.	Sample No.	Footage From	Footage To	Sample Length	Assay Pb	Assay Zn	Assay Ag	Assay Au	Assay Cu	Assay x Feet Pb	Assay x Feet Zn	Assay x Feet Ag
325.5 1068	331.6 1088	MAINLY PALE GREEN QUARTZ - CARBONATE - SERICITE PHYLLITE WITH PARTING OF BLACK STRIPED MINERALIZED GRAPHITE PHYLLITE Good F2 folds in graphite phyllite. Green mariposite in first 1 foot of section. Rock is soft, talcy. CC filled mini-fault breccia zones.	6.5/ 6.5		1070.5	1077		0.5-1% lead-zinc estimate 1-3% pyrite							
1088	331.6 1115.2	DARK GRAY STRIPED GRAPHITIC PHYLLITE. MINERALIZED. Thin quartz laminae alternate with black graphitic laminae. 3-4% sulphide - mainly pyrite concentrated in quartz lamiae... F1 laminae. Pyrite has bleby texture.			1091.0	1092.7		Estimate 0.5% lead-zinc							
		No. 1596 -- weak mineralized graphite phyllite. 0.5-1% lead-zinc of above phyllite. Gashes with blebs of chalcopyrite	3	1596	1105.4	1108.4	3.0	.10	.10	.03					
		No. 1597 -- massive sulphide 70-80% sulphide, 20% lead-zinc													
		No. 1598 -- mineralized graphite phyllite - 3% sulphide, 0.5%-1% lead-zinc	1.7	1597	1108.4	1110.1	1.7	6.44	11.65	2.00					
		Note blebs of pyrite-pyrrhotite at 1114-1115'.	3	1598	1110.1	1113.1	3.0	.02	.06	.03					
			7.9 7.5	— 1599	1113.1 1121.0	1121.0 1128.5	— 7.5	2.35	3.48	1.03					
1115.2	343.1 1128.5	SULPHIDE ZONE WITH GRAY PHYLLITE AND GREEN QUARTZ - CHLORITE - SERICITE PHYLLITES Thin banded sulphides in zone with late quartz veins and soft sheared quartz-sericite-chlorite phyllite. Note healed mini fault breccia adjacent to first band of massive sulphide. F2 fold nose in banded sulphide at 1125.5'.													

DIAMOND DRILL RECORD

LOGGED BY S. B. Reamsbottom

PROPERTY

LATITUDE BEARING OF HOLE STARTED

DEPARTURE DIP OF HOLE COMPLETED

ELEVATION DIP TESTS DEPTH Proposed: Ultimate:

D.D.H. No. 75-A76 PAGE 10 of 12

CLAIM No.

N

DIRECTION AND DISTANCE FROM NE. CLAIM POST

FOOTAGE FROM	FOOTAGE TO	DESCRIPTION	Rec. Ft.	Sample No.	Footage From	Footage To	Sample Length	Assay Pb	Assay Zn	Assay Ag	Assay Au	Assay Cu	Assay x Feet Pb	Assay x Feet Zn	Assay x Feet Ag
		No. 1599 -- bands of massive banded sulphide (0.5-2') in quartz vein altered gray, and green quartz-sericite-chlorite phyllites: pyrite, sphalerite, galena. Some c. g. crystals. Sulphide bands 10+, average 4-6% lead-zinc in section possibly.													
		Core Angle: 1090' = 77°, F2 folds; 1100' = 85°, 1110' = 73°, 1020' = 76°, 1130' = 86°.													
343.9 1128.5	378.1 1142.2	GRAY QUARTZ - SERICITE PHYLLITE													
		With buff thin (1mm) carbonate stringers. Minor pyrite. Core Angle: 1130' = 55°, 1140' = 60°.													
1142.2	351.4 1153	PALE WHITE BLEACHED QUARTZ - SERICITE PHYLLITE													
		Band sulphide 1145-1146' - pyrite, pyrrhotite, sphalerite, chalcopyrite in gashes. 20% sulphide, 11% lead-zinc.			1144.5	1146	1.5	11% lead-zinc estimate							
		Core Angle: 1150 = 83°.													
1153	357.5 1173	GRAY QUARTZ - SERICITE PHYLLITE													
		Quartz veins with buff carbonate. Small-scale fractures rehealed Core Angle; 1160' = 60°, 1170' = 60°.													
1173	364.8 1197	PALE BLEACHED QUARTZ - SERICITE - CHLORITE PHYLLITE													
		Stringers of pyrite in fracture network. Greenish where more chlorite present. Blebs of sphalerite @ 1181'.													

DIAMOND DRILL RECORD

LOGGED BY S. B. Reamsbottom

PROPERTY

LATITUDE BEARING OF HOLE STARTED

DEPARTURE DIP OF HOLE COMPLETED

ELEVATION DIP TESTS DEPTH Proposed: Ultimate:

D.D.H. No. 75-A76 PAGE 8 of 12

CLAIM No.

DIRECTION AND DISTANCE FROM NE. CLAIM POST

FOOTAGE FROM	FOOTAGE TO	DESCRIPTION	Rec. Ft.	Sample No.	Footage From	Footage To	Sample Length	Assay Pb	Assay Zn	Assay Ag	Assay Au	Assay Cu	Assay x Feet Pb	Assay x Feet Zn	Assay x Feet Ag
								(0.2)	(0.3)	(0.03)	trace		.28	.42	.042
		No. 1592 -- Mineralized striped quartz-graphite phyllite, 5-6% sulphide, 3% lead-zinc			936.3	937.7		0.5% lead-zinc estimate							
		No. 1593 -- band sulphide in phyllite gangue - 50-60% sulphide, 10% lead-zinc	5.3	1594	937.7	943	5.3	5.18	4.92	1.85			27.454	26.076	9.805
		No. 1594 -- 40% sulphide, pyrite, sphalerite, galena, minor chalcopyrite, 10% lead-zinc		Wt. Av.	933.4	943.0	9.6	4.99	5.08	1.84 (624)			47.860	48.768	17.619
287.4 943	292.8 960.7	BLEACHED WHITE QUARTZ - SERICITE PHYLLITE													
		With abundant quartz veins (1-2') Minor pyrite in foliation. Core Angle: 940' = 75°, 950' = 82°, 960' = 70°.	17.7		943.0	960.7	—								
960.7	293.4 963.2	MASSIVE BANDED PYRITIC SULPHIDE													
		Good F2 folds. 70-90% sulphide; pyrite, red sphalerite, galena. 20% lead-zinc.	2.5	1595	960.7	963.2	2.5	9.45	14.36	3.38					
963.2	325.5 1068	GRAY QUARTZ - SERICITE PHYLLITE													
		With thin (0.5') bands of cream quartz-sericite phyllite. Quartz veins with minor chlorite. Blebs, stringers of pyrite.													
		Core Angle: 970' = 45°, 980' = 62°, 990' = 83°, 1000' = 83°, 1010' = 76°, 1020' = 72°, 1030' = 76°, many F2 folds, 1040' = 80°, 1050' = 71°, 1060' = 75°.													
		Note, bleached quartz-sericite phyllite (1059-1061.5')													

DIAMOND DRILL RECORD

LOGGED BY S. B. Reamsbottom

PROPERTY

LATITUDE BEARING OF HOLE STARTED

DEPARTURE DIP OF HOLE COMPLETED

ELEVATION DIP TESTS DEPTH Proposed: Ultimate:

D.D.H. No. 75-A76 PAGE 9 of 12

CLAIM No.

N

DIRECTION AND DISTANCE FROM NE. CLAIM POST

FOOTAGE FROM	FOOTAGE TO	DESCRIPTION	Rec. Ft.	Sample No.	Footage From	Footage To	Sample Length	Assay Pb	Assay Zn	Assay Ag	Assay Au	Assay Cu	Assay x Feet Pb	Assay x Feet Zn	Assay x Feet Ag
325.5 1068	331.6 1088	MAINLY PALE GREEN QUARTZ - CARBONATE - SERICITE PHYLLITE WITH PARTING OF BLACK STRIPED MINERALIZED GRAPHITE PHYLLITE Good F2 folds in graphite phyllite. Green mariposite in first 1 foot of section. Rock is soft, talcy. CC filled mini-fault breccia zones.	6.5/ 6.5		1070.5	1077		0.5-1% lead-zinc estimate 1-3% pyrite							
1088	331.6 1115.2	DARK GRAY STRIPED GRAPHITIC PHYLLITE. MINERALIZED. Thin quartz laminae alternate with black graphitic laminae. 3-4% sulphide - mainly pyrite concentrated in quartz lamiae... F1 laminae. Pyrite has bleby texture. No. 1596 -- weak mineralized graphite phyllite. 0.5-1% lead-zinc of above phyllite. Gashes with blebs of chalcopyrite No. 1597 -- massive sulphide 70-80% sulphide, 20% lead-zinc No. 1598 -- mineralized graphite phyllite - 3% sulphide, 0.5%-1% lead-zinc Note blebs of pyrite-pyrrhotite at 1114-1115'.			1091.0	1092.7		Estimate 0.5% lead-zinc							
			3	1596	1105.4	1108.4	3.0	.10	.10	.03					
			1.7	1597	1108.4	1110.1	1.7	6.44	11.65	2.00					
			3	1598	1110.1	1113.1	3.0	.02	.06	.03					
			7.9 7.5	— 1599	1113.1 1121.0	1121.0 1128.5	— 7.5	2.35	3.48	1.03					
1115.2	343.1 1128.5	SULPHIDE ZONE WITH GRAY PHYLLITE AND GREEN QUARTZ - CHLORITE - SERICITE PHYLLITES Thin banded sulphides in zone with late quartz veins and soft sheared quartz-sericite-chlorite phyllite. Note healed mini fault breccia adjacent to first band of massive sulphide. F2 fold nose in banded sulphide at 1125.5'.													

DIAMOND DRILL RECORD

LOGGED BY S. B. Reamsbottom

PROPERTY

LATITUDE BEARING OF HOLE STARTED

DEPARTURE DIP OF HOLE COMPLETED

ELEVATION DIP TESTS DEPTH Proposed: Ultimate:

D.D.H. No. 75-A76 PAGE 10 of 12

CLAIM No.

N

DIRECTION AND DISTANCE FROM NE. CLAIM POST

FOOTAGE FROM	FOOTAGE TO	DESCRIPTION	Rec. Ft.	Sample No.	Footage From	Footage To	Sample Length	Assay Pb	Assay Zn	Assay Ag	Assay Au	Assay Cu	Assay x Feet Pb	Assay x Feet Zn	Assay x Feet Ag
		No. 1599 -- bands of massive banded sulphide (0.5-2') in quartz vein altered gray, and green quartz-sericite-chlorite phyllites: pyrite, sphalerite, galena. Some c. g. crystals. Sulphide bands 10+, average 4-6% lead-zinc in section possibly.													
		Core Angle: 1090' = 77°, F2 folds; 1100' = 85°, 1110' = 73°, 1020' = 76°, 1130' = 86°.													
343.9 1128.5	348.1 1142.2	GRAY QUARTZ - SERICITE PHYLLITE													
		With buff thin (1mm) carbonate stringers. Minor pyrite. Core Angle: 1130' = 55°, 1140' = 60°.													
1142.2	351.4 1153	PALE WHITE BLEACHED QUARTZ - SERICITE PHYLLITE													
		Band sulphide 1145-1146' - pyrite, pyrrhotite, sphalerite, chalcopyrite in gashes. 20% sulphide, 11% lead-zinc. Core Angle: 1150 = 83°.			1144.5	1146	1.5	11% lead-zinc estimate							
1153	357.5 1173	GRAY QUARTZ - SERICITE PHYLLITE													
		Quartz veins with buff carbonate. Small-scale fractures rehealed Core Angle; 1160' = 60°, 1170' = 60°.													
1173	364.8 1197	PALE BLEACHED QUARTZ - SERICITE - CHLORITE PHYLLITE													
		Stringers of pyrite in fracture network. Greenish where more chlorite present. Blebs of sphalerite @ 1181'.													

DIAMOND DRILL RECORD

LOGGED BY S. B. Reamsbottom

PROPERTY

LATITUDE BEARING OF HOLE STARTED

DEPARTURE DIP OF HOLE COMPLETED

ELEVATION DIP TESTS DEPTH Proposed: Ultimate:

D.D.H. No. 75-A76 PAGE 11 of 12

CLAIM No.

N

DIRECTION AND DISTANCE FROM NE. CLAIM POST

FOOTAGE FROM	FOOTAGE TO	DESCRIPTION	Rec. Ft.	Sample No.	Footage From	Footage To	Sample Length	Assay Pb	Assay Zn	Assay Ag	Assay Au	Assay Cu	Assay x Feet Pb	Assay x Feet Zn	Assay x Feet Ag
		Core Angle; 1180' = 67°, 1190' = 71°.	"												
364.8 1197	366.5 1202.3	SULPHIDE ZONE													
		Breccia, massive sulphide with parting of bleached quartz-sericite phyllite at 1198-1201'. Sulphide: 50-70% pyrite, 15-20%	5.0	1600	1197	1202.3	5.3	4.35	4.44	1.53					
		lead-zinc. Average 10% over section. Core Angle: 1201' = 72°. Note barite, gypsum in fractures.	"												
		-													
1202.3	367.8 1206.7	BLEACHED WHITE QUARTZ - SERICITE PHYLLITE WITH 1.5 FEET OF BLACK GRAPHITE PHYLLITE	4.4		1202.3	1206.7									
1206.7	318.1 1242.5	MASSIVE BANDED PYRITE SULPHIDE	5.3	1901	1206.7	1212	5.3	3.15	3.06	1.18					
		More quartz feldspar veins from 1220' onwards. 50-90% sulphide: pyrite, red sphalerite, galena, minor magnetite, pyrrhotite	4.0	1902		1216	4.0	1.00	0.31	0.35					
		and chalcopyrite. Grade varies 6-15%. possible average 8-10%.	5.0	1903		1221	5.0	4.73	3.60	1.41			23.65	18.00	7.05
		Note subvertical open-space fractures infilled with white barite rosettes.	4.0	1904		1225	4.0	1.60	0.22	0.29			6.40	0.88	1.16
		No. 1901 -- M.S. 80% sulphide, 1-2% magnetite, 10-12% lead-zinc	3.5	1905		1228.5	3.5	5.37	4.20	1.41			18.795	14.70	4.935
		No. 1902 -- massive brecciated pyrite, 70% sulphide, 2-3% lead-zinc	4.0	1906		1232.5	4.0	0.59	0.27	0.32			2.36	1.08	1.28
		No. 1903 -- M.S. 80% sulphide, 15-20% lead-zinc	5.5	1907		1238	5.5	5.03	3.66	1.47			27.665	20.13	8.085
		No. 1904 -- M.S. - pyrite with C.G. quartz-feldspar. Low lead-zinc possibly 3%	4.5	1908		1242.5	4.5	4.05	3.48	1.15			18.225	15.39	5.175
		No. 1905 -- Banded sulphide - 50-60% sulphide; 8% lead-zinc, Note magnetite, bands of white barite, tension gashes with chalcopyrite													

DIAMOND DRILL RECORD

LOGGED BY S. B. Reamsbottom

PROPERTY _____

D.D.H. No. 75-A76 PAGE 12 of 12

LATITUDE _____ BEARING OF HOLE _____ STARTED _____

DEPARTURE _____ DIP OF HOLE _____ COMPLETED _____

ELEVATION _____ DIP TESTS _____ DEPTH Proposed: Ultimate: _____

CLAIM No. _____

N

DIRECTION AND DISTANCE FROM NE. CLAIM POST

FOOTAGE FROM	FOOTAGE TO	DESCRIPTION	Rec. Ft.	Sample No.	Footage From	Footage To	Sample Length	Assay Pb	Assay Zn	Assay Ag	Assay Au	Assay Cu	Assay x Feet Pb	Assay x Feet Zn	Assay x Feet Ag
		No. 1906 -- banded sulphide in quartz-sericite gangue. 50% sulphide: pyrite, minor sphalerite, galena, pyrrhotite, magnetite, chalcopyrite in gashes. Magnetite crystals. 3-5% lead-zinc.		Wt. Av.	1216.0	1242.5	26.5	3.66	2.65	1.04	(35.8)		97.120	70.18	27.685
		No. 1907 -- as above, banding more obvious as darker pyrrhotite, magnetite, sphalerite. 60-70% sulphide; 6-9% lead-zinc. Veins of white barite. 1-2% magnetite.		Wt. Av.	1216.0	1228.5	12.5	3.91	2.69	1.05	(36.1)		48.845	33.58	13.145
		No. 1908 -- as above. 3% magnetite. 6-8% lead-zinc. Core Angle: 1210' = 75°, 1220' = 60°, 1230' = 50°, 1240' = 67°.		Wt. Av.	1232.5	1242.5	10.0	4.59	3.55	1.33	(45.5)		45.915	35.52	13.260
378.7 1242.4	404.2 1326	PALE WHITE BLEACHED QUARTZ - SERICITE PHYLLITE With buff carbonate in foliation. Abundant stringers, blebs of pyrite and pyrrhotite. Rock broken locally. Note biotite at 1282-1287'. Pyrrhotite @ 1279-1307'. Core Angle: 1250' = 70°, 1260' = 79°, F2 folds, 1270' = 47°, 1280' = 70°, 1290' = 67°, 1300 = 65°, 1310' = 75°, 1320' = 66°.	6/10		1264	1274									
1326	407.2 1336	GRAY QUARTZ - SERICITE PHYLLITE Note network of quartz-carbonate veins. Minor pyrite. Core Angle: 1330' = 75°. Rock broken but recovered (cored).			Good Recovery										
	1336	END OF HOLE													
		REMARKS: 1. Cemented hole from 1336' upwards (9 bags of cement)													

DDH: FAGA076 -- 42 DEGREE PROFILE

(VIEW AZIMUTH = 312 DEGREES)

ELEV:1302 592247E ; 905204N

PLUNGE ANGLE IS 11.0 TREND ANGLE IS 312.0

CORRECTED COLLAR POSITION: X = 617.1 Z = 1313.6

SECTION NAME: 78W

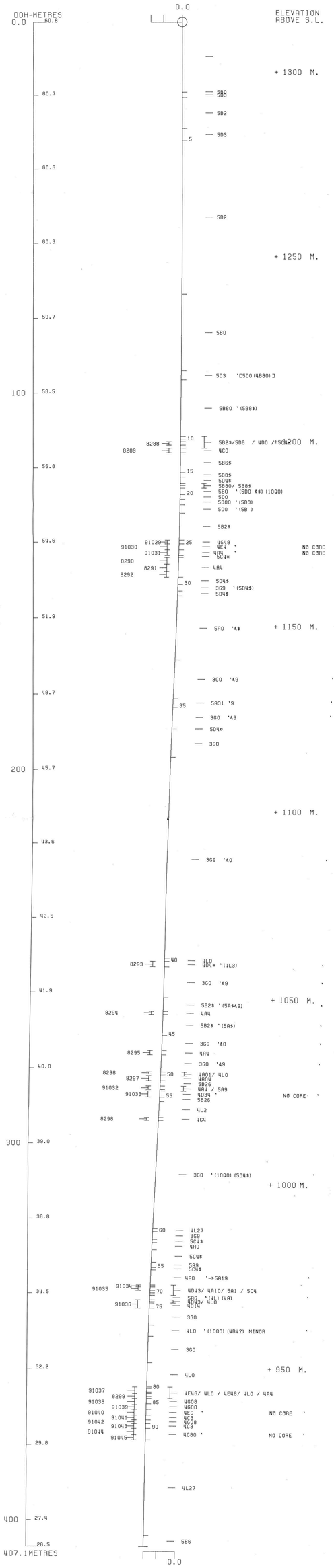

DDH: FAGA076 -- 42 DEGREE PROFILE

(VIEW AZIMUTH = 312 DEGREES)

ELEV:1302 592247E ; 905204N

PLUNGE ANGLE IS 11.0 TREND ANGLE IS 312.0

CORRECTED COLLAR POSITION: X = 617.1 Z = 1313.6

SECTION NAME: 78W

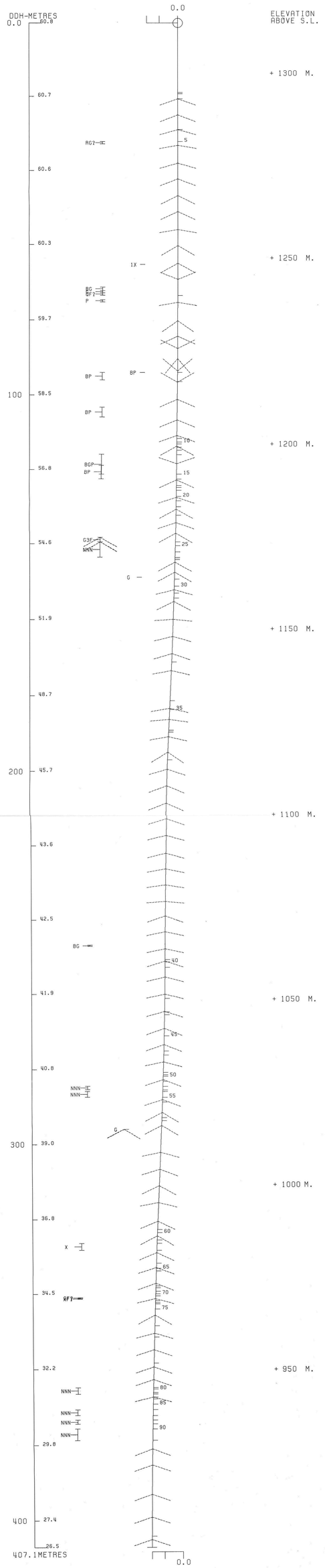

FAGA078

DRILL HOLE : FAGA078

NORTHING : 905,254.9

EASTING : 592,375.8

ELEVATION : 1,301.1

TOTAL DEPTH : 310.8

SECTION : W 78

R.F.E. : S2

RFE DIRECTION: 230

PLUNGE ANGLE : 11

PLUNGE DIRECT: 312

DHD CALC: 1

SS CALC: 1

DETAIL RECORD COUNTS:

NOS ORE-SAMPLES:	20
NOS DOWN-H-SURVEYS:	6
NOS DOWN-H-LITHOLOGY:	89
NOS DOWN-H-STRUCTURE:	43
NOS DOWN-H-FAULTS:	26
NOS DOWN-H-SPLINES:	6
NOS COMPOSITES:	0

DDH: FAGA078 UTM-N: 905,254.9 UTM-E: 592,375.8 UTM-ELEV: 1,301.1 TOTAL DEPTH: 310.8 SECTION: W 78
RFE: S2 RFE DIR: 230 PLUNGE ANGLES: 11 312 DHD CALC: 1 SS CALC: 1

DEPTHS FROM	DEPTHS TO	SAMPLE NO.	INT.	REC.	ROCK UNIT	ASSAYS S.G. PULP	CU %	PB %	ZN %	AG(AA) G/MT	AG(FA) G/MT	AU(FA) G/MT	PO %	PY %	TOT FE	BAO %	HG %	MN %	AS %	BA %	S.G. W.R.
51.7	53.2	91577	1.5	.5	4D4			5.40	9.22	90.79											
54.6	55.3	91578	.7	.5	4D4			6.37	13.30	90.79											
56.8	58.0	91579	1.2	.5	4D4			3.89	8.03	59.70											
74.6	76.1	91580	1.5	.5	4D47			5.03	4.79	65.50											
78.6	80.8	91581	2.2	.5	4D45			8.72	14.83	126.09											
80.8	82.6	91582	1.8	.5	4A4			2.45	4.13	37.39											
82.6	84.0	91583	1.4	.5	4D4			3.89	6.83	54.50											
84.0	85.3	91584	1.3	.5	4A4			1.67	4.20	28.10											
85.3	86.0	91585	.7	.5	4A0			1.83	3.00	27.10											
262.7	263.9	91586	1.2	.5	4G4			5.09	5.40	64.50											
264.1	264.9	91587	.8	.5	4L42			1.83	3.18	25.39											
265.2	266.7	91588	1.5	.5	4L42			1.23	3.00	20.19											
266.7	267.6	91589	.9	.5	4E4			3.74	6.36	75.79											
284.1	286.1	91590	2.0	.5	4A43			5.25	7.20	89.79											
286.1	287.4	91591	1.3	.5	4A30			1.50	3.00	20.19											
287.4	289.0	91592	1.6	.5	4A34			1.87	3.24	24.30											
289.0	290.2	91593	1.2	.5	4A34			1.89	3.72	26.10											
290.2	291.4	91594	1.2	.5	4A30			1.14	1.17	20.19											
291.4	293.5	91595	2.1	.5	4A34			1.80	4.38	31.19											
293.5	294.1	91596	.6	.5	4L0			.58	.93	8.19											
WEIGHTED AVERAGE																					
51.7	53.2		1.5	.5				5.40	9.22	90.79											
54.6	55.3		.7	.5				6.37	13.30	90.79											
56.8	58.0		1.2	.5				3.89	8.03	59.70											
74.6	76.1		1.5	.5				5.03	4.79	65.50											
78.6	86.0		7.4	2.5				4.39	7.73	64.39											
262.7	263.9		1.2	.5				5.09	5.40	64.50											
264.1	264.9		.8	.5				1.83	3.18	25.39											
265.2	267.6		2.4	1.0				2.17	4.26	41.04											
284.1	294.1		10.0	3.5				2.32	3.91	37.07											

DDH: FAGA078 UTM-N: 905,254.9 UTM-E: 592,375.8 UTM-ELEV: 1,301.1 TOTAL DEPTH: 310.8 SECTION: W 78
RFE: S2 RFE DIR: 230 PLUNGE ANGLES: 11 312 DHD CALC: 1 SS CALC: 1

DEPTH	ZENITH	AZIMUTH
0.000	180.000	0.000
61.600	179.000	107.000
122.500	170.500	122.500
183.500	163.000	118.700
244.400	160.000	114.800
299.300	159.500	28.000

DDH: FAGA078 UTM-N: 905,254.9 UTM-E: 592,375.8 UTM-ELEV: 1,301.1 TOTAL DEPTH: 310.8 SECTION: W 78
RFE: S2 RFE DIR: 230 PLUNGE ANGLES: 11 312 DHD CALC: 1 SS CALC: 1

DEPTH	UNIT	CODE	DESC		RECOVERY	IND
42.7	0001	#			0.5-	1
47.9	0002	5A@			0.5-	1
48.5	0003	5B2$			0.5-	1
51.7	0004	5A@			0.5-	1
53.2	0005	4D4		NO CORE	0.5-	1
54.6	0006	5D4@			0.5-	1
55.3	0007	4D4	-> 4A4 AT BASE		0.5-	1
56.8	0008	5D4@			0.5-	1
58.0	0009	4D4		NO CORE	0.5-	1
64.3	0010	5B2*			0.5-	1
65.5	0011	5B2*	GOUGE (10QO)		0.5-	1
69.3	0012	5D4@			0.5-	1
74.6	0013	5B6			0.5-	1
76.1	0014	4D47		NO CORE	0.5-	1
78.6	0015	4LO			0.5-	1
80.8	0016	4D45	[4A34]	NO CORE	0.5-	1
82.6	0017	4A4			0.5-	1
84.0	0018	4D4		NO CORE	0.5-	1
85.3	0019	4A4			0.5-	1
86.0	0020	4AO		NO CORE	0.5-	1
87.8	0021	5A@			0.5-	1
88.2	0022	5D4@			0.5-	1
88.8	0023	5A69	-> 4AO		0.5-	1
89.5	0024	5D4@			0.5-	1
90.4	0025	5B52	@ (5D4@) 50:50		0.5-	1
92.5	0026	5B2@			0.5-	1
92.9	0027	5D4@			0.5-	1
95.8	0028	5B2@			0.5-	1
98.5	0029	5BO			0.5-	1
108.2	0030	5BO	(5DO) 70:30		0.5-	1
110.8	0031	5DO	(5D$)		0.5-	1
112.7	0032	5BO			0.5-	1
116.4	0033	5DO			0.5-	1
120.3	0034	5BO			0.5-	1
127.8	0035	5DO			0.5-	1
129.9	0036	5BO			0.5-	1
132.7	0037	5DO			0.5-	1
133.7	0038	5BO			0.5-	1
142.0	0039	5DO	(5D$)		0.5-	1
143.8	0040	5BO			0.5-	1
145.4	0041	5DO			0.5-	1
147.6	0042	5E$			0.5-	1
148.3	0043	5D4@			0.5-	1
149.0	0044	5D4@			0.5-	1
150.0	0045	5DO	GOUGE		0.5-	1
150.9	0046	5B6			0.5-	1
153.1	0047	5DO			0.5-	1
154.0	0048	5B20			0.5-	1
158.0	0049	5DO			0.5-	1
159.0	0050	5B6			0.5-	1
159.4	0051	5D6			0.5-	1

DDH: FAGA078 UTM-N: 905,254.9 UTM-E: 592,375.8 UTM-ELEV: 1,301.1 TOTAL DEPTH: 310.8 SECTION: W 78
RFE: S2 RFE DIR: 230 PLUNGE ANGLES: 11 312 DHD CALC: 1 SS CALC: 1

DEPTH	UNIT	CODE	DESC		RECOVERY	IND
162.0	0052	5BO			0.5-	1
162.4	0053	5DO			0.5-	1
163.8	0054	5BO			0.5-	1
169.9	0055	5DO	(5D$)		0.5-	1
179.4	0056	5B$	(5BO)		0.5-	1
184.6	0057	5D$			0.5-	1
186.7	0058	5BO			0.5-	1
189.4	0059	5D$	LEOPARD ROCK		0.5-	1
195.0	0060	5DO			0.5-	1
196.7	0061	5D$			0.5-	1
215.0	0062	5B62			0.5-	1
216.0	0063	5DO			0.5-	1
221.6	0064	5A3	(5DO) 90:10		0.5-	1
222.9	0065	5A$	(5D$) 90:10		0.5-	1
223.7	0066	5A3	(5E2)		0.5-	1
225.9	0067	5D$			0.5-	1
237.7	0068	5B62	(5B$) 90:10		0.5-	1
238.2	0069	5D$			0.5-	1
247.2	0070	3G2	[5B62]		0.5-	1
249.1	0071	5D4	$ (5B2) 95:05		0.5-	1
249.9	0072	5B62	[3G2]		0.5-	1
250.7	0073	5BO			0.5-	1
261.3	0074	3GO			0.5-	1
261.8	0075	4LO			0.5-	1
262.7	0076	3GO			0.5-	1
263.9	0077	4G4		NO CORE	0.5-	1
264.1	0078	5D4*			0.5-	1
266.8	0079	4L42			0.5-	1
267.6	0080	4E4	BXA	NO CORE	0.5-	1
275.8	0081	3GO	(3G2) (4LO)		0.5-	1
278.6	0082	3G4	(4L2)		0.5-	1
279.5	0083	4LO			0.5-	1
280.1	0084	3G4			0.5-	1
284.1	0085	4LO			0.5-	1
286.0	0086	4A43		NO CORE	0.5-	1
293.5	0087	4A30	&4	NO CORE	0.5-	1
296.2	0088	4LO			0.5-	1
310.9	0089	3G4	(3GO BIO)		0.5-	1

DDH: FAGA078 UTM-N: 905,254.9 UTM-E: 592,375.8 UTM-ELEV: 1,301.1 TOTAL DEPTH: 310.8 SECTION: W 78
RFE: S2 RFE DIR: 230 PLUNGE ANGLES: 11 312 DHD CALC: 1 SS CALC: 1

DDH	F DEPTH	T DEPTH	FEAT	SYMTRY	S0 ANGLE	S0 DIRECT	S1 ANGLE	S1 DIRECT	S2 ANGLE	S2 DIRECT	RFE CDE	DHDC	SDC	PROCESS
FAGA078	0.0	47.5	CS2	Z	0	0	70	180	80	230	0	1	1	1
FAGA078	0.0	49.4	CS2	S	0	0	30	0	80	230	0	1	1	1
FAGA078	0.0	63.4	CS2	Z	0	0	55	180	75	230	0	1	1	1
FAGA078	0.0	68.3	CS2	S	0	0	30	0	80	230	0	1	1	1
FAGA078	0.0	73.5	CS2	Z	0	0	15	180	70	230	0	1	1	1
FAGA078	0.0	85.0	CS2	Z	0	0	0	0	70	230	0	1	1	1
FAGA078	0.0	88.1	PS2		0	0	0	0	70	230	0	1	1	1
FAGA078	0.0	93.7	CS2	S	0	0	40	0	85	230	0	1	1	1
FAGA078	0.0	93.9	CS2	S	0	0	25	0	65	230	0	1	1	1
FAGA078	0.0	99.7	CS2	S	0	0	0	0	65	230	0	1	1	1
FAGA078	0.0	108.2	PS2		0	0	0	0	65	230	0	1	1	1
FAGA078	0.0	113.7	CS2	Z	0	0	75	180	55	230	0	1	1	1
FAGA078	0.0	118.9	CS2	S	0	0	25	0	65	230	0	1	1	1
FAGA078	0.0	126.8	CS2	E	0	0	0	0	80	230	0	1	1	1
FAGA078	0.0	133.5	CS2	Z	0	0	75	180	70	230	0	1	1	1
FAGA078	0.0	140.5	CS2	S	0	0	50	0	70	230	0	1	1	1
FAGA078	0.0	146.3	CS2	Z	0	0	60	180	70	230	0	1	1	1
FAGA078	0.0	156.7	PS2		0	0	0	0	70	230	0	1	1	1
FAGA078	0.0	164.0	CS2	P	0	0	0	0	80	230	0	1	1	1
FAGA078	0.0	171.0	PS2		0	0	0	0	80	230	0	1	1	1
FAGA078	0.0	176.2	CS2	Z	0	0	0	0	80	230	0	1	1	1
FAGA078	0.0	180.3	CS2	Z	0	0	70	180	80	230	0	1	1	1
FAGA078	0.0	189.3	CS2	Z	0	0	80	180	80	230	0	1	1	1
FAGA078	0.0	193.5	CS2	Z	0	0	60	180	65	230	0	1	1	1
FAGA078	0.0	200.9	CS2	S	0	0	60	0	80	230	0	1	1	1
FAGA078	0.0	206.4	CS2	S	0	0	50	0	70	230	0	1	1	1
FAGA078	0.0	210.0	PS2		0	0	0	0	80	230	0	1	1	1
FAGA078	0.0	216.1	CS2	S	0	0	40	0	80	230	0	1	1	1
FAGA078	0.0	221.6	PS2		0	0	0	0	80	230	0	1	1	1
FAGA078	0.0	230.7	CS2	S	0	0	15	0	75	230	0	1	1	1
FAGA078	0.0	236.5	PS2		0	0	0	0	70	230	0	1	1	1
FAGA078	0.0	240.8	PS2		0	0	0	0	85	230	0	1	1	1
FAGA078	0.0	246.0	CS2	S	0	0	35	0	80	230	0	1	1	1
FAGA078	0.0	251.6	PS2		0	0	0	0	85	230	0	1	1	1
FAGA078	0.0	256.0	PS2		0	0	0	0	80	230	0	1	1	1
FAGA078	0.0	260.1	PS2		0	0	0	0	70	230	0	1	1	1
FAGA078	0.0	264.0	PS2		0	0	0	0	80	230	0	1	1	1
FAGA078	0.0	274.0	CS2	Z	0	0	50	180	75	230	0	1	1	1
FAGA078	0.0	277.7	CS2	Z	0	0	70	180	70	230	0	1	1	1
FAGA078	0.0	292.0	PS2		0	0	0	0	85	230	0	1	1	1
FAGA078	0.0	294.7	CS2	S	0	0	0	0	80	230	0	1	1	1
FAGA078	0.0	300.7	PS2		0	0	0	0	85	230	0	1	1	1
FAGA078	0.0	303.7	CS2	D	0	0	0	0	85	230	0	1	1	1

DDH: FAGA078 UTM-N: 905,254.9 UTM-E: 592,375.8 UTM-ELEV: 1,301.1 TOTAL DEPTH: 310.8 SECTION: W 78
RFE: S2 RFE DIR: 230 PLUNGE ANGLES: 11 312 DHD CALC: 1 SS CALC: 1

DDH	F DEPTH	T DEPTH	FEAT	REC CD	PARLL	UPPER PLANE		INTERNAL PLANE		LOWER PLANE		DHD
FAGA078	51.6	53.1	NNN			0	0	0	0	0	0	1
FAGA078	56.8	58.0	NNN			0	0	0	0	0	0	1
FAGA078	58.0	64.3	GB			0	0	0	0	0	0	1
FAGA078	64.3	65.5	G	2		0	0	0	0	0	0	1
FAGA078	66.1	66.4	G			0	0	0	0	0	0	1
FAGA078	68.2	68.4	G			0	0	0	0	0	0	1
FAGA078	69.1	69.2	G			0	0	0	0	0	0	1
FAGA078	74.5	85.9	NNN			0	0	0	0	0	0	1
FAGA078	104.4	104.5	G			0	0	0	0	0	0	1
FAGA078	111.3	112.4	G	1		0	0	0	0	0	0	1
FAGA078	147.5	148.2	G			0	0	0	0	0	0	1
FAGA078	148.9	149.9	G			0	0	0	0	0	0	1
FAGA078	202.9	203.1	G			0	0	0	0	0	0	1
FAGA078	208.4	208.6	G			0	0	0	0	0	0	1
FAGA078	209.1	209.3	G			0	0	0	0	0	0	1
FAGA078	210.2	210.3	G			0	0	99	999	0	0	1
FAGA078	238.6	238.9	G			99	999	0	0	99	999	1
FAGA078	242.1	242.3	G			0	0	0	0	0	0	1
FAGA078	242.3	242.6	G			0	0	99	999	0	0	1
FAGA078	0.0	243.5	G			0	0	99	999	0	0	1
FAGA078	262.7	263.8	NNN			0	0	0	0	0	0	1
FAGA078	266.7	267.6	X			0	0	0	0	0	0	1
FAGA078	266.7	267.6	NNN			0	0	0	0	0	0	1
FAGA078	275.8	278.5	BG			99	999	0	0	99	999	1
FAGA078	280.1	284.1	BG			0	0	0	0	0	0	1
FAGA078	284.1	293.5	NNN			0	0	0	0	0	0	1

DDH: FAGA078 UTM-N: 905,254.9 UTM-E: 592,375.8 UTM-ELEV: 1,301.1 TOTAL DEPTH: 310.8 SECTION: W 78
RFE: S2 RFE DIR: 230 PLUNGE ANGLES: 11 312 DHD CALC: 1 SS CALC: 1

DDH	SEGMENT NOS	COND INDICATOR
FAGA078	1	2
FAGA078	2	2
FAGA078	3	2
FAGA078	4	2
FAGA078	5	2
FAGA078	6	1

CYPRUS ANVIL MINING CORPORATION

DIAMOND DRILL CORE LOG

Date: 20 SEP 81

Hole Number: FAGA 078

Project: GRUM RELOG

Location: 78 W.

Claim:

U.T.M. ~~Terr.~~ Plane Co-ords.: 905254.9 N

(1979 HLW Survey) 592375.8 E

Grid Co-ords:

Elevation: 1301.1 m.

Total Depth: 1020 ft.

Purpose: GRUM DEP S/D.

Reason hole Terminated:

Logged by: DSJ - JGS.

Date(s) Logged: 20 SEP 81

Drilling Contractor: Cameron McCutcheon

Size	CORE From	To
BQ	0	1020

Collar Cased and Capped: ____

Hole Cemented:

Steel down hole:

Started: 23 MAY 75 Completed: 27 MAY 75

Reference Fabric Orientation Diagram:

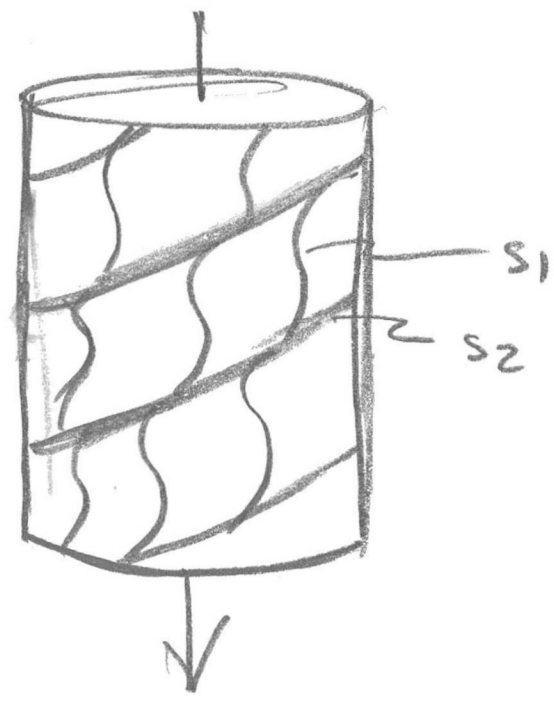

All symmetry determinations looking

NW with S2 dipping

SW with dip azimuth 230

Cyprus Anvil Mining Corp.

Diamond Drill Core Log Date: 20 SEP 81 Logged By: DSJ-JGS

DDH FAGA078
2 8

FEET

Code	Drillhole	Elevation	Northing	Easting	Units (feet/metres)	R.F.E.	
1	2 8	10 16	17 24	25 32	34 39	41 42	
T	FAGA078	13011.1	9052549.9	5923758.8	FEET		

Code	Drillhole	Depth	Zenith Angle	True Azimuth	Comments
1	2 8	10 14	22 26	28 32	34 56
R	FAGA078	00	180.0	09.0	AT COLLAR
R	FAGA078	2020	179.0	107.0	TROPARI MAG
R	FAGA078	4020	170.5	122.5	
R	FAGA078	6020	163.0	118.7	
R	FAGA078	8020	160.0	114.8	
R	FAGA078	9820	159.5	28.0	

Code	Drillhole	Comments, Errant Remarks, Snivellings and / or Lewd Suggestions
1	2 8	10 56

DDH FAGA078 (2–8) FEET

Cyprus Anvil Mining Corp.

Lithologic Log

Date: 20SEP81 Logged By: DSJ - JGS

Code	From	To	Recov.	No.	Unit	Description
1	10–14	16–20	22–24	26–28	30–34	35
L	0	140		01	*	O/B.
L	140	157		02	5A*	ANK. Patchy Carbonate
L	157	159		03	5B2*	DOL
L	159	169		04	5A*	ANK patchy
L	169	174		05	4D4	No CORE INTERP K/A Log.
L	174	179		06	5D4*	ANK. Cream No fusch all Carbonate
L	179	181		07	4D4	4A4 → base.
186.5-190.3 L	181	186		08	5D4*	ANK as above 05.
L	186	190		09	4D4	? INTERP K/A LOG. NO CORE
L	190	211		10	5B2*	02 as above. GOUGE & BKn Core NIL ATT.
L	211	215		11	5B2*	GOUGE (10,00) 1ft REC F.
L	215	227		12	5D4*	as above. 1% fusch. GOUGE 217-218; 227-227.3; 224-24.5, N/A
L	227	244		13	5B6	
L	244	249		14	4D47	INTERP K/A LOG NO CORE
L	249	258		15	4L0	
L	258	265		16	4D45	[4A34] INTERP K/A LOG NO CORE.
L	265	271		17	4A4	
L	271	275		18	4D4	- INTERP K/A LOG NO CORE.
L	275	280		19	4A4	
L	280	282		20	4A0	INTERP K/A LOG NO CORE
L	282	288		21	5A*	ANK.
L	288	289		22	5D4*	ANK. minor py - CARB - 5B.
L	289	291		23	5A69	minor sphal. → 4A0
L	291	293		24	5D4*	ANK.
L	293	296		25	5B52	* ANK. (5D4* ANK) 50%
L	296	303		26	5B2*	ANK.
L	303	304		27	5D4*	ANK
L	304	314		28	5B2*	ANK
L	314	323		29	5B0	START VERY CALC SECTION →
L	323	355		30	5B0	(5D0) 70/30 interband Gouge 342.7-43 N/A.
L	355	363		31	5D0	(5D*) → DOL RHOMBS IN 5D
L	363	369		32	5B0	Gouge 365.2 - 369.0 / POOR REC 0.4' NO ATT
L	369	382		33	5D0	
L	382	394		34	5B0	
L	394	419		35	5D0	
L	419	426		36	5B0	

DDH FAGA078 (2–8) FEET

Cyprus Anvil Mining Corp.

Lithologic Log

Page 4 of 8

Date: 20 SEP 81 Logged By: DSJ - JGS

Code	From	To	Recov.	No.	Unit	Description
1	10–14	16–20	22–24	26–28	30–34	35
L	4262	4353		37	5D0	
L	4353	4387		38	5B0	
L	4387	4659		39	5D0	(5D* DOL CS. RHOMBS)
L	4659	4719		40	5B0	
L	4719	4770		41	5D0	
L	4770	4842		42	5E*	DOL.
L	4842	4865		43	5D4*	ANK GOUGE NIL ATT.
L	4865	4888		44	5D4*	ANK none fusch. CARB, ++
L	4888	4920		45	5D0	GOUGE F. NO/ATT.
L	4920	4950		46	5B6	
L	4950	5023		47	5D0	
L	5023	5054		48	5B20	
L	5054	5183		49	5D0	
L	5183	5215		50	5B6	
L	5215	5230		51	5D6	
L	5230	5315		52	5B0	
L	5315	5327		53	5D0	
L	5327	5373		54	5B0	
L	5373	5573		55	5D0	(5D* DOL)
L	5573	5887		56	5B*	DOL. (5B0)
L	5887	6056		57	5D*	DOL
L	6056	6125		58	5B0	
L	6125	6215		59	5D*	DOL (LEOPARD ROCK)
L	6215	6397		60	5D0	
L	6397	6453		61	5D*	DOL as 59 above.
L	6453	7055		62	5B62	Gouge Zones 666.0 - 66.6; N/ATT; 683.9 - 84.6 NIL ATT
L	7055	7086		63	5D0	686.2 - 686.8 N/A, 689.8 - 690 // S2
L	7086	7270		64	5A3	(5D0) = 10%
L	7270	7312		65	5A*	DOL (5D* DOL) = 10%
L	7312	7340		66	5A3	(5E2) END OF COV. ??
L	7340	7410		67	5D*	DOL++ CARB
L	7410	7800		68	5B62	(5B* DOL) → 5-10%
L	7800	7814		69	5D*	DOL all CARB.
L	7814	8109		70	3G2	[5B62] Gouge 783 - 83.8 u/c // S2 LC // S2; 794.6 - 795;
L	8109	8174		71	5D4	DOL (5B2) < 5% 795.2 - 796.2 // S2 5D6 = 796.2 - 96.3
L	8174	8200		72	5B62	[3G2] 799.2 - 99.2 // S2

DDH EAGA078 (2 — 8)

Cyprus Anvil Mining Corp.

Lithologic Log

Date: 20 SEP 81 Logged By: DST - JGS

FEET

Code	From	To	Recov.	No.	Unit	Description
1	10 14	16 20	22 24	26 28	30 34	35
L	8200	8224		73	5B0	sl. calc.
L	8224	8573		74	3G0	
L	8573	8589		75	4L0	
L	8589	8619		76	3G0	
L	8619	8658		77	4G4	INTERP K/A LOG NO CORE.
L	8658	8664		78	5D4*	
L	8664	8752		79	4L4Z	
L	8752	8780		80	4E4	A BRECCIA INTRP K/A LOG NO CORE
L	8780	9050		81	3G0	(3GZ)(893-894.1(4L0)
L	9050	9140		82	3G4	Bkn Core Gouge LC 1152 UC 1152.(4LZ)
L	9140	9170		83	4L0	
L	9170	9190		84	3G4	
L	9190	9322		85	4L0	Bkn GOUGE
L	9322	9382		86	4A43	NO CORE INTERP K/A LOG
L	9382	9630		87	4A30	DITTO
L	9630	9719		88	4L0	
L	9719	10200		89	3G4	(3GO BIOT)
						END OF HOLE.

DDH FAGA078 (2 8) FEET.

Cyprus Anvil Mining Corp.

Structural Log

Date: 21SEP81 Logged By: DSJ - JGS

Code	From	To	Feature	Sym	S_0 Dip Direct.	S_1 Dip Direct.	S_2 Dip Direct	Description
1	10 14	16 20	22 24	26	28 32	34 38	40 44	
S		1560	CS12	Z		70 0510	80 2310	
S		1620	CS12	S		30 2310	80 2310	
S		2080	CS12	Z		55 0510	75 2310	
S		2240	CS12	S		30 2310	80 2310	
S		2410	CS12	Z		15 0510	70 2310	
S		2790	CS12	Z			70 2310	
S		2890	PS12				70 2310	
S		3075	CS12	S		40 2310	85 2310	
S		3270	CS12	S			65 2310	
S		3550	PS12				65 2310	
S		3730	CS12	Z		75 0510	55 2310	
S		3900	CS12	S		25 2310	65 2310	
S		3080	CS12	S		25 2310	65 2310	
S		4160	CS12	E			80 2310	
S		4380	CS12	Z		75 0510	70 2310	
S		4610	CS12	S		50 2310	70 2310	
S		4800	CS12	Z		60 0510	70 2310	
S		5140	PS12				70 2310	
S		5380	CS12	D			80 2310	
S		5610	PS12				80 2310	
S		5780	CS12	Z			80 2310	
S		5911 5	CS12	Z		70 0510	80 2310	
S		6210	CS12	Z		80 0510	80 2310	
S		6315	CS12	Z		60 0510	65 2310	
S		6590	CS12	S		60 2310	80 2310	
S		6770	CS12	S		50 2310	70 2310	
S		6890	PS12				80 2310	
S		7090	CS12	S		40 2310	80 2310	
S		7270	PS12				80 2310	
S		7570	CS12	S		15 2310	75 2310	
S		7760	PS12				70 2310	
S		7910	PS12				85 2310	
S		8070	CS12	S		35 2310	80 2310	
S		8255	PS12				85 2310	
S		8535	PS12				70 2310	
S		8660	PS12				80 2310	

DDH FAGA078 (2–8) FEET

Cyprus Anvil Mining Corp.

Structural Log

Page 7 of 8

Date: 21 SEP 81 Logged By: DSJ - JGS

Code	From	To	Feature	Sym	S_0 Dip	S_0 Direct.	S_1 Dip	S_1 Direct.	S_2 Dip	S_2 Direct	Description
1	10–14	16–20	22–24	26	28	32	34	38	40	44	
S		8990	CS2	Z			50	050	75	230	
S		9110	CS2	Z			70	050	70	230	
S		8400		R					80	230	
S		9580		R					85	230	
S		9670	CS2	S					80	230	
S		9865	CS2	D					85	230	
S		9965	CS2	D					85	230	
											E/H

NOT RESAMPLED NO CORE
SEE K/A LOG FOR K/A ASSAYS
FEET.

FEET.

DDH FAGA078 (2 — 8) Cyprus Anvil Mining Corp

Logged by PSJ JGS

ASSAY LOG (SAMPLER'S COPY) Date 21 SEP 81 Sampled by

CODE	FROM	TO	SAMPLE	INTR.	REC (m)	UNIT	DESCRIPTION
1	10 14	16 20	22 26	28 30	32 34	36 40	42
P	11695	11745	120090	50	50	4D41	NB K/A LOG
P	11714						ASSAYS.
P	11792	11815	120091	23	23	4041	
P	11865	11903	120092	38	30	4D41	
P	12447	12496	120093	49	49	4D47	
P	12580	12650	120094	70	68	4D45	
P	12650	12770	120095	60	60	4A41	
P	12710	12755	120096	45	45	4D41	
P	12755	12800	120097	45	45	4A41	
P	12800	12820	120098	20	20	4041	
P	18619	18658	120099	39	39	4G41	
P	18664	18699	120100	26	26	4L42	
P	18700	18750	120101	50	50	4L42	
P	18750	18780	120102	30	30	4F41	
P	19322	19385	120103	63	63	4A43	
P	19385	19430	120104	45	43	4A30	
P	19430	19480	120105	50	50	4A30	
P	19480	19520	120106	40	40	4A30	
P	19520	19560	120107	40	40	4A30	
P	19556	19630	120108	70	70	4A30	
P	19635	19650	120109	20	20	4L01	

FEET!

FAULT

DDH F.A.G.A.0.7.8. (2 / 8)

Cyprus Anvil Mining Corp.

Structural Log

Page _____ of _____

Date: _____ Logged By: _____

Code	From	To	Feature	Sym	S_0 Dip Direct.	S_1 Dip Direct.	S_2 Dip Direct	Description
1	10 14	16 20	22 24	26	28 32	34 38	40 44	
F	11619 5	11745	MNN					No core - K-A sampled
F	11865	11903	NNN					No core K A sampled
F	11903	12110	GBI					Gouge & broken core, no attitude
F	12110	12150	G	2				gouge 25% recovry
F	12170	12180	G					IND
F	12217 0	12217 3	G					IND
F	12214 0	12214 5	G					IND
F	12414 7	12812 0	NNN					No core - KA sampled
F	13412 7	13413 0	G					gouge
F	13615 2	13619 0	G	/				10% recovry, gouge IND
F	14814 2	14865	G					IND
F	14888	14912 0	G					IND
F	16160	16166	G					IND
F	16813 9	16814 6	G					IND
F	16816 2	16816 8	G					IND
F	16819 8	16910 0	G			99 9999		$11 S_2$
F	17813 0	17813 8	G		99 9999		99 9999	upper & lower cnt $11 S_2$
F	17914 6	17915 0	G					IND
F	17915 2	17916 2	G			99 9999		$11 S_2$
F		17992	G			99 9999		
F	18619	18658	NWN					No core - KA sample
F	18715 2	18718 0	X					bxa, -
F	18715 2	18718 0	NNN					No core - KA sample
F	19015 0	19114 0	BG		99 9999		99 9999	broken core & gouge upper & lower contacts $11 S_2$
F	19119 0	19312 2	BG					brkn, gouge
	19312 2	19630	NNN					No core - KA sample

DIAMOND DRILL RECORD

LOGGED BY S. B. Reamsbottom

METRIC calculations in last 2 Pages

PROPERTY VANGORDA, GRUM JOINT VENTURE

D.D.H. No. 75-A78 PAGE 1 of 8

	LINE GRID	HIW				
LATITUDE	12 + 08 N	(11,046.27m N)	BY TROPARI BEARING OF HOLE	202' -- 106° 20' (Bra) ~~True~~ (DIP) 89°	STARTED May 23, 1975 D.S.	CLAIM No.
DEPARTURE	77 + 91 W	(7689.80m E)	DIP OF HOLE	402' -- 122° 10' 80°30'	COMPLETED May 27, 1975 A.S.	DIRECTION AND DISTANCE FROM NE. CLAIM POST
ELEVATION	4261'	(1311.67m)	BY TROPARI DIP TESTS	602' -- 118° 02' 85.7°	DEPTH Proposed: Ultimate: 1020' (310.90m)	
				802' -- 114° 08' 70°		
				982' -- 27° 20'		
				202' -- -89°	0 140-Tricone	
				402' -- -80.5°	0-140-BW 180-1020 BQ	
				602' -- -73°		
				802' -- -70° 982' -- -69.5°		

FOOTAGE FROM	FOOTAGE TO	DESCRIPTION	Rec. Ft.	Sample No.	Footage From	Footage To	Sample Length	Assay Pb	Assay Zn	Assay Ag	Assay Au	Assay Cu	Assay x Feet Pb	Assay x Feet Zn	Assay x Feet Ag
0	42.67 140	OVERBURDEN													
140	51.66 169.5	BLACK THINLY LAMINATED GRAPHITIC PHYLLITE G													
		Local F2 folds, F2 dominant. Rock broken and poker chips. Few quartz veins.		Good Recovery											
		Core Angle: 140' = 66°, 150' = 70°, 160' = 75°. 42.6 45.7 48.7													
169.5	58.00 190.3	BANDS OF SULPHIDE IN BLEACHED QUARTZ - SERICITE AND GRAPHITIC PHYLLITES Sl G													
		Note green mariposite (1%) in bleached phyllites. Sulphide bands: massive - 50-80% sulphide, pyrite, sphalerite, lesser galena, chalcopyrite in tension gashes.	5.0	1703	169.5	174.5	5.0	5.40	9.22	2.65	14.62		27.00	46.1	13.25
		No. 1703 -- M.S. and mineralized phyllite: 50-70% sulphide, 10%+ lead-zinc	/4.7		174.5	179.2	—								
		No. 1704 -- banded sulphide in quartz-sericite gangue - 40-50% sulphide, 10% lead-zinc	2.3	1704	179.2	181.5	2.3	6.38	13.30	2.65	19.68		14.674	30.59	6.095
		No. 1705 -- M.S. 70% sulphide, 6-8% lead-zinc Core Angle: 170' = 65°, 180' = 60°, 190' = 75°.	/5.0		181.5	186.5	—								
		51.8 54.8 57.9	3.0	1705	186.5	190.3	3.8	3.90	8.04	1.74	11.44		14.820	30.552	6.612
190.3	64.11 211	GRAY QUARTZ - SERICITE PHYLLITE S		WT. AV.	169.5 51.66	190.3 58.0	20.8 6.34	2.72	5.16	1.25	(42.8)		56.494	107.242	25.957
		Quite phyllitic. Rock broken.	5/5		191	196									
			2.5/3.5		196	199.5									
			2.5/4.5		199.5	204									

DIAMOND DRILL RECORD

LOGGED BY S. B. Reamsbottom

PROPERTY

LATITUDE _____ BEARING OF HOLE _____ STARTED _____

DEPARTURE _____ DIP OF HOLE _____ COMPLETED _____

ELEVATION _____ DIP TESTS _____ DEPTH Proposed: Ultimate: _____

D.D.H. No. 75-A78 PAGE 2 of 8

CLAIM No. _____

N

DIRECTION AND DISTANCE FROM NE. CLAIM POST

FOOTAGE FROM	FOOTAGE TO	DESCRIPTION	Rec. Ft.	Sample No.	Footage From	Footage To	Sample Length	Assay Pb	Assay Zn	Assay Ag	Assay Au	Assay Cu	Assay x Feet Pb	Assay x Feet Zn	Assay x Feet Ag
			0.7/ 1.5		206.5	208									
			1.3/3		208	211									
67.31 211	69.80 229	BLEACHED QUARTZ - SERICITE PHYLLITE 3b													
		Note minor green mariposite. Buff carbonate.	3/5		221	226									
		Core Angle: 220' = 60°. 67.0													
229	74.58 244.7	GRAY QUARTZ - SERICITE PHYLLITE S													
		Slightly bleached. Well defined F1 laminae folded by F2.													
		Core Angle: 230' = 69°, 240' = 69°. 70.1 73.1													
244.7	76.08 249.6	SULPHIDE SECTIONS IN BLEACHED PHYLLITE 3b													
		Thin massive pyritic sulphide zones (0.5-8') in bleached quartz-sericite phyllite.	4.9	1706	244.7 74.58	249.6 76.08	4.9 1.5	5.03	4.80	1.91 (65.48)					
		Sulphides - high grade 15-20%: pyrite, sphalerite, galena, minor pyrrhotite. Section average 4% possibly.													
		Core Angle: 248' = 62°. 75.6													
249.6	78.64 258	BLEACHED QUARTZ - SERICITE PHYLLITE 3b													
		Core Angle: 255' = 71°. 77.7	/8.4		249.6	258.0	—								

DIAMOND DRILL RECORD

LOGGED BY S. B. Reamsbottom

PROPERTY

LATITUDE | BEARING OF HOLE | STARTED

DEPARTURE | DIP OF HOLE | COMPLETED

ELEVATION | DIP TESTS | DEPTH Proposed: Ultimate:

D.D.H. No. 75-A78 PAGE 3 of 8

CLAIM No.

N

DIRECTION AND DISTANCE FROM NE. CLAIM POST

FOOTAGE FROM	FOOTAGE TO	DESCRIPTION	Rec. Ft.	Sample No.	Footage From	Footage To	Sample Length	Assay Pb	Assay Zn	Assay Ag	Assay Au	Assay Cu	Assay x Feet Pb	Assay x Feet Zn	Assay x Feet Ag
78.64 258	92.05 302	BLACK MINERALIZED QUARTZ - GRAPHITE PHYLLITE													
		Band of massive pyrit -sulphide 258-265'. Mineralized graphite phyllite to 282'.	6.8	1707	258	265	7.0	8.72	14.83	3.68			61.04	103.81	25.76
		Good F1 folds defined by alternating quartz-micaceous graphitic laminae.	6	1708	265	271	6.0	2.45	4.14	1.09			14.70	24.84	6.54
		No. 1707 -- M.S. F1 bands in F2 fold nose, C.A. parallel to core axis. 60-70% sulphide: pyrite, sphalerite, galena. Grade 15-20% + lead-zinc	4.5	1709	271	275.5	4.5	3.90	6.84	1.59			17.55	30.78	7.155
		No. 1798 -- Mineralized striped quartz-graphite phyllite: 10% sulphide, 6-8% lead-zinc	4.5	1710	275.5	280	4.5	1.68	4.20	.82			7.56	18.9	3.69
,		No. 1710 -- as above	2	1711	280	282	2.0	1.83	3.00	.79			3.66	6.00	1.58
		No. 1711 -- weak mineralized graphitic phyllite, 0.5% lead-zinc		WT. AV.	258.0	(83.97) 275.5	(5.3) 17.5	5.23	9.11	2.25	(77.39% n.r.)		93.29	159.43	39.435
		Thin white quartz-sericite zones 288' on. Very weak mineralized		WT. AV.	258.0	271.0	13.0 3.9	5.83	9.9	2.48	(85.2)		75.74	128.65	32.30
		blebs of pyrite in F2 laminae. Core Angle: 260' subvertical F1, F2 fold nose, 270' = 72°, 280' = 67°, 290' = 70°, 300' = 65°. 82.3 85.3 85.4 91.44		WT. AV.	275.5	282.0	6.5	1.73	3.83	.81	(27.8)		11.22	24.9	5.27
			16.2 / 16.3		282.0	288.2 - 296.5	— —	0.6 % Pb Zn,		Est.	(0.5% Py)				
	108.05														
302	354.5	GRAY QUARTZ - SERICITE PHYLLITE													
		Locally greenish where more chlorite. F2 closely spaced dominannt. F1 mainly subvertical to F2. Rocks broken 321-343'.	3/4		332	336									
		Core Angle: 310' = 76°, 320' = 64°, 330-360' = 60°, 340' = 54°, 350' = 67°. 94.5 97.5 100.6 103.6 106.7	2/3		336	339									
			2/4		339	343									
	115.52														
354.5	379	GREEN-GRAY QUARTZ - SERICITE - CHLORITE PHYLLITE SC.													
		Soft, talcy texture in carbonate rich zones. Quartz laminae. F2 good. Mini fault breccia zones.	4/7.5		365	372.5									
		Core Angle: 360' = 83°, 370' = 68°. 109.7 112.8	1/2.5		372.5	375									

DIAMOND DRILL RECORD

LOGGED BY S. B. Reamsbottom

PROPERTY

LATITUDE BEARING OF HOLE STARTED

DEPARTURE DIP OF HOLE COMPLETED

ELEVATION DIP TESTS DEPTH Proposed: Ultimate:

D.D.H. No. 75-A78 PAGE 4 of 8

CLAIM No.

N

DIRECTION AND DISTANCE FROM NE. CLAIM POST

FOOTAGE FROM	FOOTAGE TO	DESCRIPTION	Rec. Ft.	Sample No.	Footage From	Footage To	Sample Length	Assay Pb	Assay Zn	Assay Ag	Assay Au	Assay Cu	Assay x Feet Pb	Assay x Feet Zn	Assay x Feet Ag
115.52 379	120.09 394	GRAY QUARTZ - SERICITE PHYLLITE Minor chlorite. S Core Angle: 380' = 60°, 390' = 45°, good F2, F1 subvertical. 115.8 118.8													
394	128.02 420	GREEN-GRAY QUARTZ - SERICITE - CHLORITE PHYLLITE Sc Soft in carbonate zones. Minor pyrite. Core Angle: 400' = 73°, 410' = 66°, 420' = 72°. 121.9 124.9 128.0													
420	129.84 426	GRAY QUARTZ - SERICITE PHYLLITE S Good F2, F3 kink folds. Core Angle: 425' = 72°. 129.5													
426	158.19 519	GREEN-GRAY QUARTZ - SERICITE - CHLORITE PHYLLITE Sc Note white (tiny) laminae. Rock quite carbonate rich as are most of these late zoned carbonate veins. Core Angle: 430' = 80°, 440' = 65°, 450' = 75°, 460' = 64°, 470' = 80°, 480' = 57°, 490' = 46°, 500 = 70°, 510' = 70°. Thin zone gray quartz-sericite phyllite at 464-469'. Broken gouged muddy at 484-492'. ① 131.1 ② 134.1 ③ 137.1 ④ 140.2 ⑤ 143.2, 146.3, 149.3, 152.4, 155.4	5/7		485	492								
519	163.68 537	GRAY QUARTZ - SERICITE PHYLLITE S Core Angle: 520' = 75°, 530' = 67°. 153.5 161.5													

DIAMOND DRILL RECORD

LOGGED BY S. B. Reamsbottom

PROPERTY

LATITUDE BEARING OF HOLE STARTED

DEPARTURE DIP OF HOLE COMPLETED

ELEVATION DIP TESTS DEPTH Proposed: Ultimate:

D.D.H. No. 75-A78 PAGE 5 of 8

CLAIM No.

N

DIRECTION AND DISTANCE FROM NE. CLAIM POST

FOOTAGE FROM	FOOTAGE TO	DESCRIPTION	Rec. Ft.	Sample No.	Footage From	Footage To	Sample Length	Assay Pb	Assay Zn	Assay Ag	Assay Au	Assay Cu	Assay x Feet Pb	Assay x Feet Zn	Assay x Feet Ag
163.68 537	196.60 645	GREEN-GRAY QUARTZ - SERICITE - CHLORITE PHYLLITE S													
		As above. Carbonate in F2 laminae.			Recovery Good.										
		Core Angle: 540' = 61°, 550' = 74°, 560' = 70°, 570' = 60°, 580' = 70°. 164.6 167.6 170.7 173.7 176.8													
		Pinkish quartz- carbonate veins 559-588'.													
		Rock limey from 588' on. Very sericitic-carbonate-chlorite rich with mottled carbonate crystals.			Recovery Good.										
		Core Angle: 590' = 72°, 600' = 72°, 610' = 70°, 620' = 75°, 630' = 80°, 640' = 75°, 645' = 71°. 185.9 189.9 192.6 195.6 196.6													
		179.8 185.58													
645	202.23 663.5	GRADES TO GRAY QUARTZ - SERICITE PHYLLITE S													
		As amount of chlorite decreases, thin quartz veins (1-3")													
		Core Angle: 650' = 68°, 660' = 83°.			Recovery Good.										
		197.1 201.2													
663.5	208.79 685	BLACK STRIPED QUARTZ - GRAPHITIC PHYLLITE G													
		Thin quartz laminae with blebs of pyrite. Network of buff carbonate veins locally.			Recovery Good.										
		Core Angle: 670' = 60°, 680' = 75°. 204.2 207.3													
685	215.95 708.5	GRAY QUARTZ - SERICITE PHYLLITE S													
		Thinly laminated. F2 dominant. F1 subvertical. Local F3 kinks.			Recovery Good.										
		Core Angle: 690' = 69°, 700' = 64°. 210.3 213.4													

DIAMOND DRILL RECORD

LOGGED BY S. B. Reamsbottom

PROPERTY

LATITUDE BEARING OF HOLE STARTED

DEPARTURE DIP OF HOLE COMPLETED

ELEVATION DIP TESTS DEPTH Proposed: Ultimate:

D.D.H. No. 75-A78 PAGE 6 of 8

CLAIM No.

N

DIRECTION AND DISTANCE FROM NE. CLAIM POST

FOOTAGE FROM	FOOTAGE TO	DESCRIPTION	Rec. Ft.	Sample No.	Footage From	Footage To	Sample Length	Assay Pb	Assay Zn	Assay Ag	Assay Au	Assay Cu	Assay x Feet Pb	Assay x Feet Zn	Assay x Feet Ag
215.95 708.5	231.65 760	BLACK STRIPED QUARTZ - GRAPHITIC PHYLLITE													
		Striped, good F2. Note white carbonate with quartz laminae -- quite limey. (Probably all rocks contain a few % carbonate)		Recovery Good.											
		Late carbonate in tension gashes. Thin, talcy quartz-sericite-carbonate phyllite at 738-741'.													
		Core Angle: 710' = 56°, 720' = 75°, 730' = 61°, good F2 folds, 740' = 80°, 750' = 69°, 760' = 69°.													
		216.4, 219.4, 222.5, 225.5, 228.6, 231.6													
760	262.71 861.9	GRAY QUARTZ - SERICITE PHYLLITE													
		Thinly laminated, F2 dominant. Local thin (0.5') zone of gray-green sericite-chlorite phyllite. Rock broken, gougy 760-762', 767-768', 783-784'. Moderately graphitic at 781-789', 803-810' blebs of pyrite.													
		Core Angle: 770' = 81°, 780' = 70°, 790' = 76°, 800' = 79°, 810' = 73°, 820' = 75°, 830' = 72°.		Recovery Good.											
		Note thin (0.5') zone of sheared talcy sericite phyllite before M.S. section.													
		Core Angle: 840' = 71°, 850' = 71°.													
		234.7, 237.7, 240.7, 243.8, 246.8, 249.9, 252.9, 256.0, 259.1													
861.9	267.61 878	SULPHIDE ZONE													
		Bands of massive pyritic sulphide in mineralized white quartz-sericite phyllite. M.S. well banded: 70-80% sulphide, 10-15%	3.9	1712	861.9	865.8	3.9	5.10	5.40	1.88			19.89	21.06	7.332
		lead-zinc. Barite rich. Mineralized phyllite 10-15% sulphide, 6-8% lead-zinc:	1.0		865.8	866.4		Barren					0	0	0
		No. 1712 -- banded massive sulphide: pyrite, sphalerite, galena, barite, 70% sulphide, 10-15% lead-zinc.	2.6	1713	866.4	869	2.6	1.83	3.18	.74			4.758	8.268	1.924
		No. 1713 -- mineralized quartz-sericite phyllite, 15-20% sulphide, 6-8% lead-zinc	1.0		869	870		Barren					0	0	0

DIAMOND DRILL RECORD

LOGGED BY S. B. Reamsbottom

PROPERTY

LATITUDE _____ BEARING OF HOLE _____ STARTED _____

DEPARTURE _____ DIP OF HOLE _____ COMPLETED _____

ELEVATION _____ DIP TESTS _____ DEPTH Proposed: Ultimate: _____

D.D.H. No. 75 - A78 PAGE 7 of 8

CLAIM No. _____

N

DIRECTION AND DISTANCE FROM NE. CLAIM POST

FOOTAGE FROM	FOOTAGE TO	DESCRIPTION	Rec. Ft.	Sample No.	Footage From	Footage To	Sample Length	Assay Pb	Assay Zn	Assay Ag	Assay Au	Assay Cu	Assay x Feet Pb	Assay x Feet Zn	Assay x Feet Ag
		No. 1714 -- Mineralized quartz-sericite phyllite	5	1714	870	875	5.0	1.23	3.00	.59			6.15	15.00	2.95
		No. 1715 -- M.S. breccia for 1 foot: pyrite, sphalerite, galena, barite, 6-8% lead-zinc ... possibly 10%.	3	1715	875	878	3	3.75	6.36	2.21			11.25	19.08	6.63
		Core Angle: 860' = 67°, 870' = 66°, 880' = 76°. 262.1 265.2 268.2		Wt. Av.	861.9	878.0	16.1	2.61	3.94	1.17	(40.1)		42.048	63.408	18.836
267.61 878	278.59 914	GRAY QUARTZ - SERICITE PHYLLITE S													
		Well defined F2, local F1 laminae subvertical to F2. Some F3 kinks. Quartz-chlorite veins. Minor carbonate in foliation.		Recovery Good.											
		Rock broken, gougy at 905-914'. 271.3													
		Core Angle: 880' = 85°, F1 subvertical folded, 890' = 70°, F1 subvertical, 900' = 89°, F1 45° same dip; 910' = 62°, F1 subvertical. 274.3 277.4													
914	284.13 932.2	BLEACHED WHITE QUARTZ - SERICITE PHYLLITE S													
		Rich sericite; white powdery carbonate in fractures. Rock broken 921-924'. Buff carbonate in foliation.		Recovery Good.											
		Core Angle: 920' = 78°, 930' = 76°. 280.4 283.5													
932.2	293.52 963	SULPHIDE ZONE P													
		Bands of massive sulphide and mineralized striped, ribbon, quartz rich graphitic phyllite. 70% sulphide in M.S. 15-20% + lead-zinc. Mineralized phyllite 20-30% sulphide, 8-12% lead-zinc.													
		Note many tension gashes healed by quartz-sphalerite, galena.													

DIAMOND DRILL RECORD

LOGGED BY S. B. Reamsbottom

PROPERTY _____

LATITUDE _____ BEARING OF HOLE _____ STARTED _____

DEPARTURE _____ DIP OF HOLE _____ COMPLETED _____

ELEVATION _____ DIP TESTS _____ DEPTH Proposed: Ultimate: _____

D.D.H. No. 75-A78 PAGE 8 of 8

CLAIM No. _____

N

DIRECTION AND DISTANCE FROM NE. CLAIM POST

FOOTAGE FROM	FOOTAGE TO	DESCRIPTION	Rec. Ft.	Sample No.	Footage From	Footage To	Sample Length	Assay Pb	Assay Zn	Assay Ag	Assay Au	Assay Cu	Assay x Feet Pb	Assay x Feet Zn	Assay x Feet Ag
		No. 1716 -- M.S. 60-70% sulphide: zinc rich: 10-15% lead-zinc	6.3	1716	932.2 (938.5 ~ 942.2)	938.5	6.3 (3.7)	5.25	7.20	2.62			33.075 5.55	45.360 11.10	16.506 2.183
		No. 1717 -- Mineralized striped graphite phyllite: 15-20% sulphide: 8-10% lead-zinc.	4.3	1717	938.5	943	4.5	1.50	3.00	.59			6.75	13.5	2.66
		No. 1718 -- Mineralized striped graphite: 15-20% sulphide, 8-10% lead-zinc	5	1718	943	948	5.0	1.88	3.24	.71			9.4	16.2	3.55
		No. 1719 -- as above	4	1719	948	952	4.0	1.90	3.72	.76			7.6	14.88	3.04
		No. 1720 -- mineralized phyllite. Fault @ 954': 15% sulphide, 6-8% lead-zinc	4	1720	952	956	4.0	1.15	1.18	.59			4.60	4.72	2.36
		No. 1721 -- mineralized phyllite, 20% sulphide, 8-10% lead-zinc													
		No. 1722 -- weak mineralized phyllite, 0.5% lead-zinc	7	1721	956	963	7.0	1.80	4.38	.91			12.60	30.66	6.37
		Core Angle: 940' = 65°, 950' = 70°, 960' = 67°. 286.5 289.6 292.6	2	1722	963	965	2.0 7.5	.59	.94	.24					
				Wt. Av.	938.5	963.0	24.5	1.67	3.26	0.73	(25.2)		40.25	79.96	17.975
				Wt. Av.	932.2	942.2	10.0	3.86	5.65	1.87	(64.1)		38.625	56.46	18.689
293.52 963	310.90 1020	GRAY-GREEN QUARTZ - SERICITE - CHLORITE - BIOTITE PHYLLITE Bleached for 4 feet beyond sulphides. Brown biotite occurs sporadically within section. Blebs of pyrite-pyrrhotite throughout. Veins of buff white cc. Core Angle: 970' = 78°, 980' = 74° 990' = 76°, F2 folds, 1000' = 82°, 1010' = 86°, 1020' = 78°. 290.6, 295.7, 301.7, 307.8, 307.8, 310.9													
	1020	END OF HOLE													
		REMARKS: 1. Cemented hole from 1020' upwards, using 8 bags of cement.													

CALCULATIONS IN METERS (1)

LOGGED BY _____ D.D.H. Nº A-78 PAGE _____

Interval From	Interval To	DESCRIPTION	Recovery	Sample Nº	Interval From	Interval To	Sample Length	Assay Pb	Assay Zn	Assay Ag	Assay Au	Assay Cu	Assay x Pb	Assay x Zn	Assay x Ag
					51.7	53.2	1.5	5.40	9.22	14.62			8.1	13.83	21.93
					53.2	54.6	1.4								
					54.6	55.3	0.7	6.38	13.3	19.68			4.47	9.31	13.78
					55.3	56.8	1.5								
					56.8	58.0	1.2	3.90	8.04	11.97			4.68	9.65	14.33
					74.6	76.1	1.5	5.03	4.80	65.48	v				
					78.6	80.8	2.1	8.72	14.83	126.17			18.31	31.14	264.96
						82.6	1.8	2.45	4.14	37.37		x 0.9	2.21 4.41	3.73 7.45	33.63 67.27
						83.9	1.4	3.90	6.84	54.51			5.46	9.58	76.31
						85.3	1.4	1.68	4.20	28.11			2.35	5.88	39.35
						85.9	0.6	1.83	3.00	27.09			1.10	1.80	16.25
					262.7	263.9	1.2	5.10	5.40	64.46			6.12	6.48	77.35
						264.1	0.2								
						264.9	0.8	1.83	3.18	25.37			1.46	2.54	20.30
						265.2	0.3								
						266.7	1.5	1.23	3.00	20.23			1.85	4.50	30.35

(2)

LOGGED BY _____ D.D.H. Nº A-78 PAGE _____

Interval From	Interval To	DESCRIPTION	Recovery	Sample Nº	Interval From	Interval To	Sample Length	Assay Pb	Assay Zn	Assay Ag	Assay Au	Assay Cu	Assay x Pb	Assay x Zn	Assay x Ag
					266.7	267.6	0.9	3.75	6.36	75.77			3.38	5.72	68.19
				×	284.1	286.1	1.9	5.25	7.20	89.83			9.98	13.68	170.68
						287.4	1.4	1.50	3.00	20.23		×1.1	1.65 2.10	3.30 4.20	22.25 28.32
						288.9	1.5	1.88	3.24	24.34			2.82	4.86	36.51
						290.2	1.2	1.90	3.72	26.06			2.28	4.46	31.27
						291.4	1.2	1.15	1.18	20.23			1.38	1.42	24.28
				"	×	293.5	2.1	1.80	4.38	31.20			3.78	9.20	65.52
						294.1	0.6	0.59	0.94	8.23	✓				
				Wt. Av.	57.7	58.0	6.3	2.74	5.20	7.94			17.25	32.79	50.04
				"	57.7	55.3	3.6	3.49	6.43	9.92			12.57	23.14	35.71
				"	78.6	83.9	5.3	5.32	9.09	77.08			28.18	48.17	408.54
				"	78.6	81.6	3.0	6.84	11.62	99.53			20.52	34.87	298.59
				"	83.9	85.9	2.0	1.73	3.84	27.8			3.45	7.68	55.60
				"	262.7	267.6	4.9	2.61	3.93	40.04			12.81	19.24	196.19
				"	287.4	293.5	7.4	1.67	3.26	25.12			12.36	24.14	185.90
				"	284.1	287.1	3.0	3.88	5.66	64.31			11.63	16.98	192.93

DDH: FAGA078 -- 42 DEGREE PROFILE

(VIEW AZIMUTH = 312 DEGREES)

ELEV:1301 592376E ; 905255N

PLUNGE ANGLE IS 11.0 TREND ANGLE IS 312.0

CORRECTED COLLAR POSITION: X = 741.3 Z = 1301.1

SECTION NAME: 78W

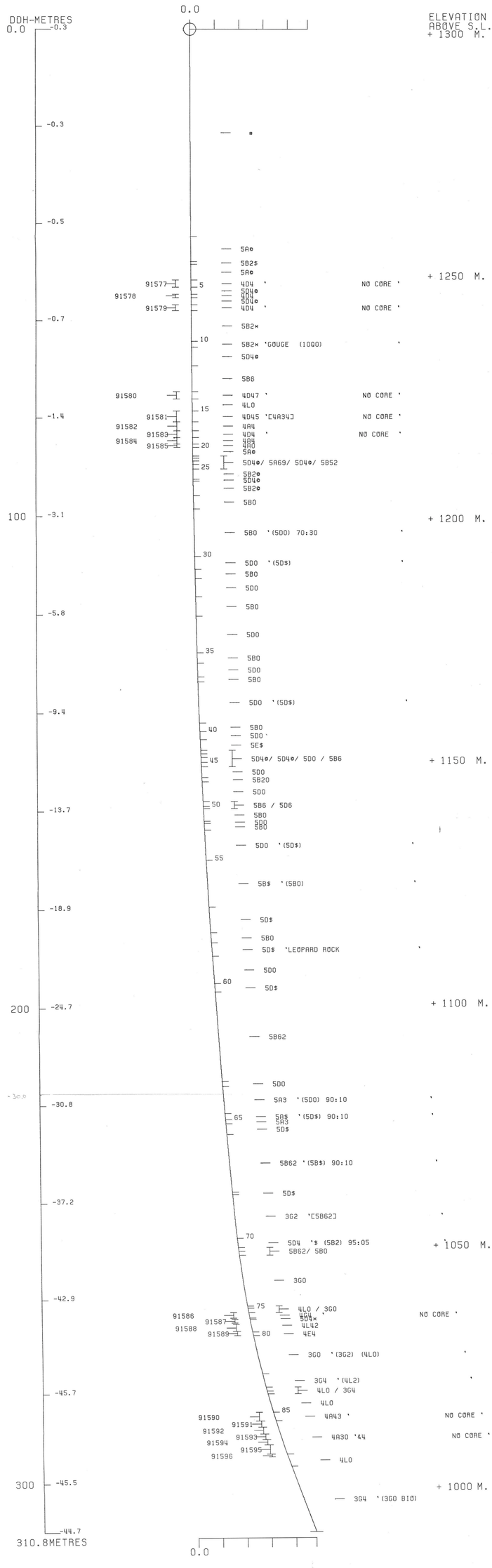

CYPRUS ANVIL MINING CORPORATION
PROGRAM DH162 11 DEC 1984 10:10 AM

DDH: FAGA078 -- 42 DEGREE PROFILE

(VIEW AZIMUTH = 312 DEGREES)

ELEV:1301 592376E ; 905255N

PLUNGE ANGLE IS 11.0 TREND ANGLE IS 312.0

CORRECTED COLLAR POSITION: X = 741.3 Z = 1301.1

SECTION NAME: 78W

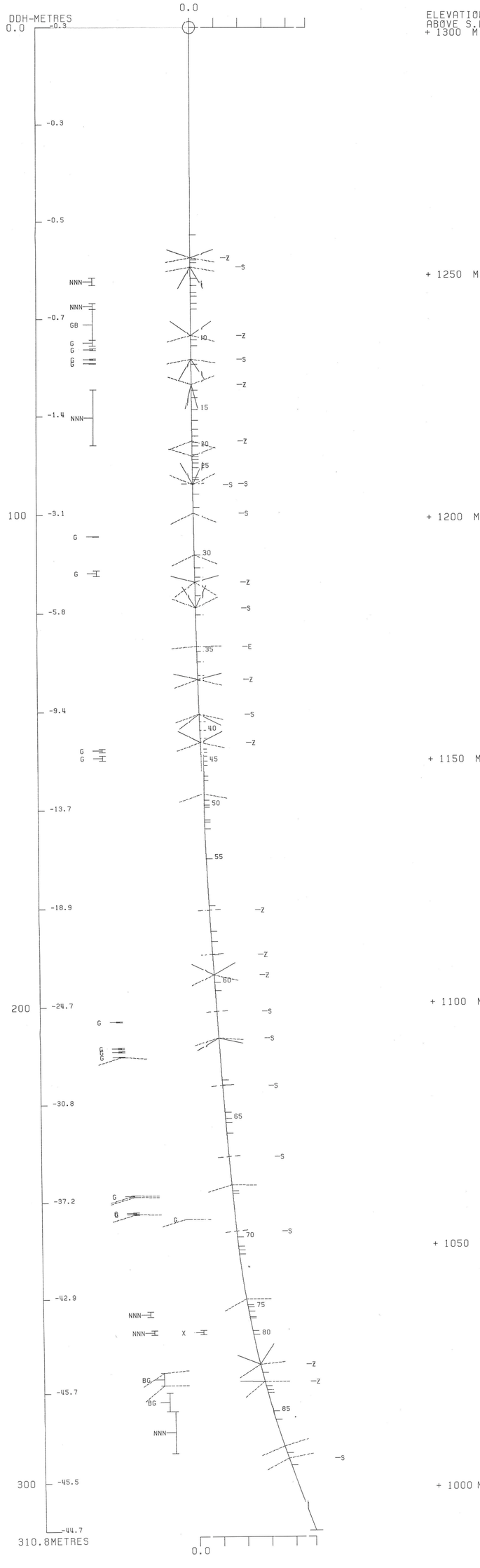

CYPRUS ANVIL MINING CORPORATION
PROGRAM DH161 11 DEC 1984 2:59 PM

FAGA080

DRILL HOLE : FAGA080
NORTHING : 905,299.8
EASTING : 592,418.7
ELEVATION : 1,300.0
TOTAL DEPTH : 346.3
SECTION : W 78
R.F.E. : S2
RFE DIRECTION: 230
PLUNGE ANGLE : 11
PLUNGE DIRECT: 312
DHD CALC: 1
SS CALC: 1

DETAIL RECORD COUNTS:

NOS ORE-SAMPLES:	3
NOS DOWN-H-SURVEYS:	6
NOS DOWN-H-LITHOLOGY:	84
NOS DOWN-H-STRUCTURE:	36
NOS DOWN-H-FAULTS:	24
NOS DOWN-H-SPLINES:	6
NOS COMPOSITES:	0

DDH: FAGA080 UTM-N: 905,299.8 UTM-E: 592,418.7 UTM-ELEV: 1,300.0 TOTAL DEPTH: 346.3 SECTION: W 78
RFE: S2 RFE DIR: 230 PLUNGE ANGLES: 11 312 DHD CALC: 1 SS CALC: 1

----DEPTHS--- FROM	TO	SAMPLE NO.	INT.	REC.	ROCK UNIT	ASSAYS S.G. PULP	CU %	PB %	ZN %	AG(AA) G/MT	AG(FA) G/MT	AU(FA) G/MT	PO %	PY %	TOT FE	BAO %	HG %	MN %	AS %	BA %	S.G. W.R.
264.9	266.7	11967	1.8	1.7	4AO	2.98	.04	.51	1.55	10.00		.14	6	6	12						
266.7	268.2	11968	1.5	1.5	4AO	2.98	.04	1.01	1.99	20.00		.20	3	6	9						
268.2	270.1	11969	1.9	1.8	4AO	2.93	.02	.97	1.84	18.00		.27	2	5	8						
WEIGHTED AVERAGE																					
264.9	270.1		5.2	5.0		2.96	.03	.82	1.78	15.80		.20	4	5	9						

DDH: FAGA080 UTM-N: 905,299.8 UTM-E: 592,418.7 UTM-ELEV: 1,300.0 TOTAL DEPTH: 346.3 SECTION: W 78
RFE: S2 RFE DIR: 230 PLUNGE ANGLES: 11 312 DHD CALC: 1 SS CALC: 1

DEPTH	ZENITH	AZIMUTH
0.000	180.000	0.000
61.600	177.300	144.600
122.500	176.000	129.500
183.500	161.600	128.800
244.400	158.800	119.800
305.400	154.600	110.500

DDH: FAGA080 UTM-N: 905,299.8 UTM-E: 592,418.7 UTM-ELEV: 1,300.0 TOTAL DEPTH: 346.3 SECTION: W 78
RFE: S2 RFE DIR: 230 PLUNGE ANGLES: 11 312 DHD CALC: 1 SS CALC: 1

DEPTH	UNIT	CODE	DESC	RECOVERY	IND
38.7	0001	#		0.5-	1
40.9	0002	5A6		0.5-	1
43.3	0003	5B62	(5B@)	0.5-	1
44.8	0004	5A6		0.5-	1
48.0	0005	5B$		0.5-	1
52.2	0006	5BC		0.5-	1
58.3	0007	5DO	(5D3)	0.5-	1
62.7	0008	5BO	(5D3) MINOR	0.5-	1
63.4	0009	5DO	LOST CORE	0.5-	1
64.9	0010	5DO		0.5-	1
65.8	0011	5DO		0.5-	1
70.3	0012	5BO		0.5-	1
79.9	0013	5DO		0.5-	1
81.7	0014	5DO	GOUGE	0.5-	1
83.5	0015	5D$	GOUGE	0.5-	1
85.5	0016	5D$	[5D MOTTLED]	0.5-	1
85.7	0017	5D$	GOUGE	0.5-	1
86.6	0018	5D$		0.5-	1
86.9	0019	5D$	GOUGE	0.5-	1
88.1	0020	5D$		0.5-	1
88.3	0021	5D$	GOUGE	0.5-	1
89.6	0022	5D$		0.5-	1
89.8	0023	5D$	GOUGE	0.5-	1
91.4	0024	5DO		0.5-	1
95.1	0025	5B83		0.5-	1
97.4	0026	5DO		0.5-	1
99.0	0027	5D$		0.5-	1
99.3	0028	5DO		0.5-	1
105.9	0029	5BC	(5DO) V. MINOR	0.5-	1
123.3	0030	5DC	(5D3)	0.5-	1
125.3	0031	5D6		0.5-	1
127.7	0032	5DO		0.5-	1
129.4	0033	4L25	6	0.5-	1
131.6	0034	5A9	PY -> 4AO	0.5-	1
132.5	0035	4L2		0.5-	1
132.8	0036	5AO		0.5-	1
133.6	0037	10Q0@		0.5-	1
139.8	0038	5A$		0.5-	1
141.6	0039	5E$8	(5B62)	0.5-	1
142.0	0040	5D4@	GOUGE	0.5-	1
142.3	0041	5B6		0.5-	1
142.6	0042	5B64		0.5-	1
142.8	0043	5B$		0.5-	1
143.2	0044	5DO		0.5-	1
146.1	0045	5BO		0.5-	1
152.3	0C46	5DO		0.5-	1
164.7	0047	5B2O	(5A3)	0.5-	1
168.0	0048	5DO	(5AO) V. MINOR	0.5-	1
169.2	0049	5AO		0.5-	1
171.2	0050	5DC		0.5-	1
172.1	0051	5A3		0.5-	1

DDH: FAGA080 UTM-N: 905,299.8 UTM-E: 592,418.7 UTM-ELEV: 1,300.0 TOTAL DEPTH: 346.3 SECTION: W 78
RFE: S2 RFE DIR: 230 PLUNGE ANGLES: 11 312 DHD CALC: 1 SS CALC: 1

DEPTH	UNIT	CODE	DESC	RECOVERY	IND
172.5	0052	5D3		0.5-	1
174.3	0053	5A$		0.5-	1
174.7	0054	5D0		0.5-	1
179.6	0055	5B2$		0.5-	1
180.2	0056	5D3		0.5-	1
182.3	0057	5A$		0.5-	1
182.8	0058	5D0		0.5-	1
183.8	0059	5B62		0.5-	1
188.6	0060	5B$	(10Q0)	0.5-	1
213.5	0061	5B26	3	0.5-	1
222.4	0062	5B6	(5B62)	0.5-	1
227.1	0063	5A6		0.5-	1
249.4	0064	5B6	(5B62)	0.5-	1
250.5	0065	4L0	GOUGE	0.5-	1
251.8	0066	5B6		0.5-	1
252.1	0067	5B6	GOUGE	0.5-	1
263.4	0068	5B61	(10Q0)	0.5-	1
264.9	0069	4LC		0.5-	1
270.1	0070	4A0		0.5-	1
278.8	0071	4L0		0.5-	1
279.5	0072	5B6	BIO	0.5-	1
280.4	0073	5D$	#	0.5-	1
286.2	0074	5B6	BIO, CHLORITE	0.5-	1
297.4	0075	4L0	(4L2)	0.5-	1
302.4	0076	5B6		0.5-	1
304.4	0077	4L2		0.5-	1
321.4	0078	3G0	[5B6] (10Q0)	0.5-	1
321.7	0079	4L0		0.5-	1
324.9	0080	4L0		0.5-	1
330.6	0081	3G4		0.5-	1
332.2	0082	4L0		0.5-	1
337.7	0083	5A6	GOUGE (3G0)	0.5-	1
346.3	0084	10AB		0.5-	1

DDH: FAGA080 UTM-N: 905,299.8 UTM-E: 592,418.7 UTM-ELEV: 1,300.0 TOTAL DEPTH: 346.3 SECTION: W 78
RFE: S2 RFE DIR: 230 PLUNGE ANGLES: 11 312 DHD CALC: 1 SS CALC: 1

DDH	F DEPTH	T DEPTH	FEAT	SYMTRY	S0 ANGLE	S0 DIRECT	S1 ANGLE	S1 DIRECT	S2 ANGLE	S2 DIRECT	RFE CDE	DHDC	SDC	PROCESS
FAGA080	0.0	38.9	CS2		0	0	0	0	90	230	0	1	1	1
FAGA080	0.0	42.1	CS2	S	0	0	0	0	75	230	0	1	1	1
FAGA080	0.0	52.4	CS2	S	0	0	45	0	65	230	0	1	1	1
FAGA080	0.0	54.6	CS2	S	0	0	25	0	80	230	0	1	1	1
FAGA080	0.0	62.2	CS2	S	0	0	0	0	70	230	0	1	1	1
FAGA080	0.0	70.7	CS2	S	0	0	45	0	65	230	0	1	1	1
FAGA080	0.0	75.0	CS2	E	0	0	0	0	75	230	0	1	1	1
FAGA080	0.0	90.2	CS2	Z	0	0	60	180	60	230	0	1	1	1
FAGA080	0.0	95.7	CS2	Z	0	0	55	180	70	230	0	1	1	1
FAGA080	0.0	101.8	CS2	S	0	0	20	0	65	230	0	1	1	1
FAGA080	0.0	107.0	CS2	S	0	0	0	0	60	230	0	1	1	1
FAGA080	0.0	113.4	CS2	Z	0	0	70	180	70	230	0	1	1	1
FAGA080	0.0	121.3	CS2	S	0	0	0	0	70	230	0	1	1	1
FAGA080	0.0	128.9	CS2	S	0	0	35	0	60	230	0	1	1	1
FAGA080	0.0	137.8	CS2	S	0	0	0	0	70	230	0	1	1	1
FAGA080	0.0	146.0	CS2	S	0	0	15	0	55	230	0	1	1	1
FAGA080	0.0	156.5	CS2	S	0	0	0	0	60	230	0	1	1	1
FAGA080	0.0	159.6	CS2	Z	0	0	55	180	70	230	0	1	1	1
FAGA080	0.0	170.7	PS2		0	0	0	0	80	230	0	1	1	1
FAGA080	0.0	176.6	CS2		0	0	0	0	70	230	0	1	1	1
FAGA080	0.0	183.8	PS2		0	0	0	0	70	230	0	1	1	1
FAGA080	0.0	191.9	CS2	Z	0	0	0	0	70	230	0	1	1	1
FAGA080	0.0	202.1	CS2	S	0	0	50	0	70	230	0	1	1	1
FAGA080	0.0	217.8	CS2	3	0	0	0	0	80	230	0	1	1	1
FAGA080	0.0	222.2	PS2		0	0	0	0	80	230	0	1	1	1
FAGA080	0.0	232.7	CS2	S	0	0	0	0	70	230	0	1	1	1
FAGA080	0.0	239.0	PS2		0	0	0	0	80	230	0	1	1	1
FAGA080	0.0	250.2	CS2	D	0	0	0	0	70	230	0	1	1	1
FAGA080	0.0	260.5	PS2		0	0	0	0	80	230	0	1	1	1
FAGA080	0.0	266.4	PS2		0	0	0	0	70	230	0	1	1	1
FAGA080	0.0	274.3	PS2		0	0	0	0	70	230	0	1	1	1
FAGA080	0.0	285.0	CS2	S	0	0	0	0	70	230	0	1	1	1
FAGA080	0.0	294.4	PS2		0	0	0	0	85	230	0	1	1	1
FAGA080	0.0	298.4	CS2	S	0	0	0	0	80	230	0	1	1	1
FAGA080	0.0	305.9	CS2	S	0	0	0	0	80	230	0	1	1	1
FAGA080	0.0	315.5	PS2		0	0	0	0	80	230	0	1	1	1

DDH: FAGA080 UTM-N: 905,299.8 UTM-E: 592,418.7 UTM-ELEV: 1,300.0 TOTAL DEPTH: 346.3 SECTION: W 78
RFE: S2 RFE DIR: 230 PLUNGE ANGLES: 11 312 DHD CALC: 1 SS CALC: 1

DDH	F DEPTH	T DEPTH	FEAT REC CD	PARLL	UPPER PLANE		INTERNAL PLANE		LOWER PLANE		DHD
FAGA080	63.3	64.9	NNN		0	0	0	0	0	0	1
FAGA080	79.8	81.6	GNP		0	0	0	0	0	0	1
FAGA080	81.6	83.5	G		0	0	0	0	0	0	1
FAGA080	85.4	85.7	G		0	0	0	0	0	0	1
FAGA080	86.5	86.8	G		0	0	0	0	0	0	1
FAGA080	88.0	88.3	G		0	0	0	0	0	0	1
FAGA080	89.6	89.7	G		0	0	0	0	0	0	1
FAGA080	141.6	142.0	G		0	0	0	0	0	0	1
FAGA080	150.4	150.6	Q		0	0	99	999	0	0	1
FAGA080	206.9	207.1	G		0	0	0	0	0	0	1
FAGA080	209.5	209.7	G		0	0	0	0	0	0	1
FAGA080	248.8	248.9	G		0	0	99	999	0	0	1
FAGA080	0.0	249.4	G		0	0	0	0	0	0	1
FAGA080	251.7	252.0	G		0	0	0	0	0	0	1
FAGA080	287.7	287.8	G		0	0	99	999	0	0	1
FAGA080	295.8	296.0	G		99	999	0	0	0	0	1
FAGA080	297.8	297.8	G		0	0	99	999	0	0	1
FAGA080	297.8	304.0	G		65	180	0	0	99	999	1
FAGA080	312.1	312.3	G		99	999	0	0	99	999	1
FAGA080	321.4	321.7	G		99	999	0	0	99	999	1
FAGA080	324.2	324.3	G		0	0	99	999	0	0	1
FAGA080	330.7	331.4	G		0	0	99	999	0	0	1
FAGA080	330.5	332.2	B		0	0	0	0	0	0	1
FAGA080	332.2	337.7	G		0	0	99	999	0	0	1

DDH: FAGA080 UTM-N: 905,299.8 UTM-E: 592,418.7 UTM-ELEV: 1,300.0 TOTAL DEPTH: 346.3 SECTION: W 78
RFE: S2 RFE DIR: 230 PLUNGE ANGLES: 11 312 DHD CALC: 1 SS CALC: 1

DDH	SEGMENT NOS	COND INDICATOR
FAGA080	1	2
FAGA080	2	2
FAGA080	3	2
FAGA080	4	2
FAGA080	5	2
FAGA080	6	1

CYPRUS ANVIL MINING CORPORATION

DIAMOND DRILL CORE LOG

Date: 20 SEP 81

Hole Number: FAGA 80

Project: GRUM RELOG

Location: 78 W.

Claim:

U.T.M.
~~Terr~~.Plane
Co-ords.: 905299.8 N

1979 HIW Survey

592418.7 E

Grid
Co-ords:

Elevation: 1300-0 m.

Reference Fabric Orientation Diagram:

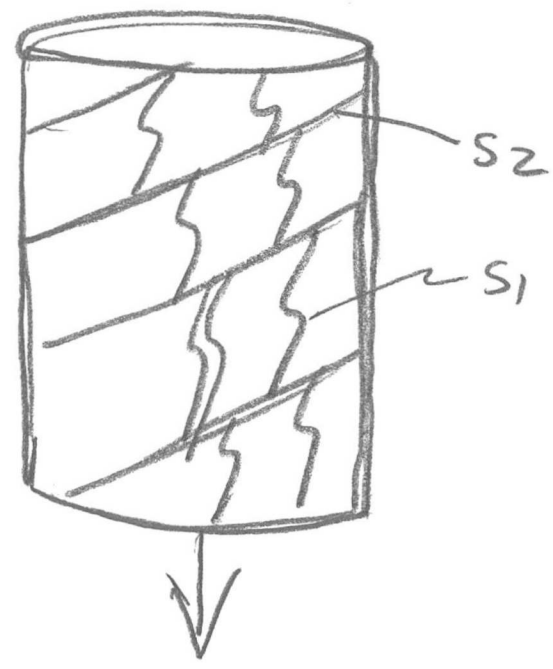

All symmetry determinations looking

NW with S2 dipping

SW with dip azimuth 230

Total Depth: 1136. FEET.

Purpose: GRUM S/D.

Reason hole Terminated:

Logged by: DSJ & JGS

Date(s) Logged: 20 SEP 81

Drilling Contractor: Connors McCutcheon

Size	CORE From	To
BQ	0	1136

Collar Cased and Capped: ____

Hole Cemented:

Steel down hole:

Started: 28 MAY 75 Completed: 3 JUN 75

Cyprus Anvil Mining Corp.

DDH FAGA080 (2 8)

Diamond Drill Core Log Date: 20SEP81 Logged By: DSJ - JGB

Code	Drillhole	Elevation	Northing	Easting	Units (feet/metres)	R.F.E.	
1	2 8	10 16	17 24	25 32	34 39	41 42	
T	FAGA080	13090.0	9052991.8	5924187.7	FEET	S2	

FEET

Code	Drillhole	Depth	Zenith Angle	True Azimuth	Comments
1	2 8	10 14	22 26	28 32	34 56
R	FAGA080	00	180.0	0.0	AT COLLAR
R	FAGA080	2020	177.3	144.6	TROPARI MAG
R	FAGA080	4020	176.0	129.5	
R	FAGA080	6020	161.6	128.8	
R	FAGA080	8020	158.8	119.8	
		10020	154.6	110.5	
			.	.	
			.	.	
			.	.

DDH FAGA080 (2 … 8)

FEET.

Cyprus Anvil Mining Corp.

Lithologic Log

Date: 20 SEP 81 Logged By: DBJ - JGS

Code	From	To	Recov.	No.	Unit	Description
1	10 14	16 20	22 24	26 28	30 34	35
L	1100	11270		01	*1	O/B
L	11270	11343		02	5A6	
L	11343	11422		03	5B62	(5B * ANK)
L	11422	11470		04	5A6	
L	11470	11575		05	5B*	DOL
L	11575	11711		06	5B0	VANGORDA FORMNT.
L	11711	11911	3	07	5D0	5D3
L	11911	12056		08	5B0	(5D3) minor
L	12056	12080		09	5D0	
L	12080	12130		10	5D0	NB LOST CORE ??
L	12130	12158		11	5D0	
L	12158	12307		12	5B0	
L	12307	12620		13	5D0	
L	12620	12680		14	5D0	GOUGE F. NO REC 6' MUD SEAM DRILL LOG
L	12680	12740		15	5D*	DOL / GOUGE. MIL/ATT.
L	12740	12805		16	5D*	DOL. or (5D MOTTLED = 1980)
L	12805	12812		17	5D*	GOUGE F MIL/ATT.
L	12812	12840		18	5D*	DOL
L	12840	12850		19	5D*	DOL GOUGE MIL ATT.
L	12850	12890		20	5D*	DOL
L	12890	12898		21	5D*	DOL GOUGE MIL ATT
L	12898	12940		22	5D*	DOL
L	12940	12945		23	5D*	DOL GOUGE MIL/ATT
L	12945	13000		24	5D0	
L	13000	13120		25	5B83	
L	13120	13196		26	5D0	
L	13196	13248		27	5D*	DOL
L	13248	13259		28	5D0	
L	13259	13473		29	5B0	(5D0) very minor
L	13473	14045		30	5D0	C503
L	14045	14110		31	5D6	
L	14110	14189		32	5D0	
L	14189	14247		33	4L25	/6
L	14247	14317		34	5A9	[py] [mod calc] →4A0
L	14317	14346		35	4L2	
L	14346	14358		36	5A0	

DDH EAGA080 (2–8)

Cyprus Anvil Mining Corp.

Lithologic Log

Date: 20 SEP 21 Logged By: DSJ-JGS

Code	From	To	Recov.	No.	Unit	Description
1	10–14	16–20	22–24	26–28	30–34	35
L	1435 8	1438 2		37	10Q0*	ANK.
L	1438 2	1458 7		38	5A1*	DOL
L	1458 7	1464 7		39	5E*18	DOL (5B62)
L	1464 7	1466 0		40	5D4	ANK. GOUGE NIL/ATT
L	1466 0	1467 0		41	5B6	
L	1467 0	1467 9		42	5B64	
L	1467 9	1468 5		43	5B1*	DOL.
L	1468 5	1469 8		44	5D0	
L	1469 8	1479 4		45	5B0	
L	1479 4	1499 7		46	5D0	493.6 - 494.4 Carb band with phyll clasts 11Sc ?
L	1499 7	1540 5		47	5B20	(5A3)
L	1540 5	1551 2		48	5D0	(5A0 Band 548.6 - 549.1)
L	1551 2	1555 0		49	5A0	
L	1555 0	1561 6		50	5D0	
L	1561 6	1564 6		51	5A3	
L	1564 6	1566 0		52	5D3	
L	1566 0	1572 0		53	5A1*	DOL
L	1572 0	1573 0		54	5D0	
L	1573 0	1589 4		55	5B2*	DOL
L	1589 4	1591 3		56	503	
L	1591 3	1598 0		57	5A*	DOL
L	1598 0	1599 7		58	5D0	
L	1599 7	1603 0		59	5B62	
L	1603 0	1618 8		60	5B*	DOL (10Q0) Base of carbonate sequence all above COV.
L	1618 8	1700 6		61	5B26	3(MYE. TRANS) PATCHY CALC 679 - 679.5 GOUGE nil att.
L	1700 6	1729 6		62	5B6	(5B62) 687.6 - 688 GOUGE.
L	1729 6	1745 0		63	5A6	
L	1745 0	1818 4		64	5B6	(5B62) Fault 816.3 - 169, nil att. 11Sz
L	1818 4	1821 9		65	4L0	TOP GOUGE NO ATT.
L	1821 9	1826 0		66	5B6	
L	1826 0	1827 0		67	5B6	GOUGE NO ATT
L	1827 0	1864 2		68	5B61	numerous (10,Q0)
L	1864 2	1869 0		69	4L0	
L	1869 0	1886 0		70	4A0	
L	1886 0	1914 6		71	4L0	
L	1914 6	1917 0		72	5B6	BIOT.

DDH FAGA080 (2–8)

Cyprus Anvil Mining Corp.

Lithologic Log

Date: 20 SEP 81 Logged By: DST - JGS

Code	From	To	Recov.	No.	Unit	Description
1	10–14	16–20	22–24	26–28	30–34	35
L	9170	9198		73	5D*	DOL + CARB. 70%
L	9198	9389		74	5B6	Biot + chlorite ∥ S1
L	9389	9757		75	4L0	(4L2) GOUGE 944.0 – 44.3 ∥ S2, 970.6 – 71.2 u/c ∥ S2;
L	9757	9920		76	5B6	→ GOUGES L/c. incl.; 977.1 – 77.3 ∥ S2, 997.2 – 97.4
L	9920	9988		77	4L2	L/c ∥ S2 u/c 65/180;
L	9988	10546		78	3G0	[5B6] GOUGE 1024.0 – 24.7 u/c ∥ S2 F.
L	10546	10555		79	4L0	GOUGE u/c 21/LC ∥ S2 (10 00) 1007.-8.2.
L	10555	10660		80	4L0	GOUGE 1063.8 – 64.2 ∥ S2
L	10660	10846		81	3G4	
L	10846	10899		82	4L0	Bkn CORE. inc gouge. 1085 – 87.4 ∥ S2.
L	10899	11080		83	5A6	GOUGE (3G0) ∥ S2. THRUST MET/BATH
L	11080	11360		84	10A	BATHOLITH) KAOLINITIC. PORPH. M. QTZ MONZ.
						END OF HOLE K. SPAR.

DDH FAG1080 (2 — 8)

Cyprus Anvil Mining Corp.

Structural Log

Date: 20SEP81 Logged By: DSJ - JGS

Code	From	To	Feature	Sym	S_0 Dip Direct.	S_1 Dip Direct.	S_2 Dip Direct	Description
1	10 — 14	16 — 20	22 — 24	26	28 — 32	34 — 38	40 — 44	
S		1275	CS2	H			9023	
S		1380	CS2	S			7523	
S		1720	CS2	S		45 2305	6523	
S		1790	CS2	S		25 2305	8023	
S		2040	CS2	S			7023	
S		2320	CS2	S		45 2305	6523	
S		2460	CS2	E			7623	
S		2960	CS2	Z		60 0505	6023	
S		3140	CS2	Z		55 0505	7023	
S		3340	CS2	S		20 2305	6523	
S		3510	CS2	S			6023	
S		3720	CS2	Z		70 0505	7023	
S		3980	CS2	S			7023	
S		4230	CS2	S		35 2305	6023	
S		4520	CS2	S			7023	
S		4790	CS2	S		15 2305	5523	
S		5135	CS2	S			6023	
S		5213	CS2	Z		55 0505	7023	
S		5610	PS2				8023	
S		5795	CS2				7023	
S		6030	PS2				7023	
S		6295	CS2	Z			7023	
S		6630	CS2	S		50 2305	7023	
S		7145	CS2	3			8023	
S		7290	PS2				8023	
S		7635	CS2	S			7023	
S		7840	PS2				8023	
S		8211	CS2	D			7023	
S		8545	PS2				8023	
S		8740	PS2				7023	
S		9100	PS2				7023	
S		9350	CS2	S			7023	
S		9660	PS2				8523	
S		9791	CS2	S			8023	
S		10036	CS2	S			8023	
S		10350	PS2				8023	→ PS2 to END of HOLE

DDH EAGA080 Cyprus Anvil Mining Corp

Logged by DSJ - TGS

FEET ASSAY LOG (SAMPLER'S COPY) Date 20SEP81 Sampled by

CODE	FROM	TO	SAMPLE	INTR.	REC (m)	UNIT	DESCRIPTION
1	10 14	16 20	22 26	28 30	32 34	36 40	42
P	8690	8750	11967	60	56	4A0	
P	8750	8800	11968	50	50	4A0	
P	8800	8860	11969	60	59	4A0	

¡ FEET!

FAULT

DDH F.A.G.A.0.8.0 (2 – 8)

Cyprus Anvil Mining Corp.
Structural Log

Page _____ of _____

Date: _____ Logged By: _____

Code	From	To	Feature	Sym	S_0 Dip	S_0 Direct.	S_1 Dip	S_1 Direct.	S_2 Dip	S_2 Direct	Description
1	10 – 14	16 – 20	22 – 24	26	28	32	34	38	40	44	
F	2080	2130	NNN								Lost core?
F	2620	2680	GNP								No recovry, drill log says mud seam
F	2680	2740	G								IND
F	2805	2812	G								IND
F	2840	2850	G								IND
F	2890	2898	G								IND
F	2940	2945	G								IND
F	4647	4660	G								IND
F	4936	4944	Q				99	999			Carbonate band w/ phyllite clasts // S_2?
F	6790	6795	G								IND
F	6876	6880	G								
F	8163	8169	G				99	999			// S_2, no attitude
F		8184	G								Top gauge IND
F	8260	8270	G								IND
F	9440	9443	G				99	999			// S_2 gauge
F	9706	9712	G		99	999					Lower cntact IND
F	9771	9773	G				99	999			// S_2
F	9972	9974	G		65	180			99	999	Lower cnt. // S_2, upper contact 65/180
F	10240	10247	G		99	999			99	999	upper & lower // S_2
F	10546	10555	G		99	999			99	999	
F	10638	10642	G				99	999			
F	10846	10899	B								broken core
F	10850	10874	G				99	999			// S_2
F	10899	11080	G				99	999			// S_2

DIAMOND DRILL RECORD

LOGGED BY S. B. Reamsbottom

PROPERTY VANGORDA, GRUM JOINT VENTURE

D.D.H. No. 75-A80 PAGE 1 of 7

	Line Grid	NTW Coords	
LATITUDE	14 + 09 N	11,090.02'N	BEARING OF HOLE BY TROPARI
DEPARTURE	77 + 94 W	7733.92'E	DIP OF HOLE BY TROPARI
ELEVATION	4257.74'	13101.56'	DIP TESTS

202' -- 144° 00' True
402' -- 128° 50'
602' -- 128° 10'
802' -- 119° 10'
1002' -- 109° 50' (-90 dip)

202' -- -87° 15'
402' -- -86° 00'
602' -- -71° 40'
802' -- -68° 50'
1002' -- -64° 40'

STARTED May 28, 1975 D.S.

COMPLETED June 3, 1975 N.S.

DEPTH Proposed: Ultimate: 1136' (346.25m)

0 - 127 BW (actual size 3 7/8" tricone)

HOLE SIZE: 127 -1136 BQ

CLAIM No.

DIRECTION AND DISTANCE FROM NE. CLAIM POST

FOOTAGE FROM	FOOTAGE TO	DESCRIPTION	Rec. Ft.	Sample No.	Footage From	Footage To	Sample Length	Assay Pb	Assay Zn	Assay Ag	Assay Au	Assay Cu	Assay x Feet Pb	Assay x Feet Zn	Assay x Feet Ag
0	38.41m 127	OVERBURDEN													
127	46.94 154	DARK GRAY, QUARTZ - GRAPHITE PHYLLITE G													
		Minor pyrite. Good F2. F1 locally subvertical.	7.5/9.5		132	147.5									
		Core Angle: 130' = 70°, 140' = 61°, 150' = 52°, F1 subvertical. 51.6 47.7 47.7													
154	129.54 425	GREEN-GRAY, QUARTZ - SERICITE - CHLORITE PHYLLITE Sc													
		With many white laminae, with fine-grained carbonate. Quite limey. Excellent F2. F1 subvertical transposed?													
		Core Angle: 160' = 70°, 170' = 41°, 180' = 65°, F1 subvertical. 48.1 47.3													
		Possible key to large-scale ore distribution. 190' = 56°, 200' = 68°, 210' = 54°, 220' = 65°, 230' = 70°.													
		Note 208-213' - no core. 240' = 76°, 250' = 64°, 260' = 74°, 270' = mud, 280' = F2 fold nose.	4.5/10		248	258									
		Rock broken, soft, gougy from 248-278'. Talcy. 290' = 66°, 300' = 60°, 310' = 65°, 320' = 62°, 330' = 62°, 340' = 46°, 350' = 45°, 360' = 60°, 370' = 67°, 380' = 69°, 390' = 70°, 400' = 60°, 410' = 62°, 420' = 46°.	4/10		258	268									
			5/10		268	278									
			5/6		278	284									
		Minor pyrite-pyrrhotite 356-357'. Pyrite in tension gashes.	2/4		284	288									
		Rock broken between 374-383'. Quartz-chlorite veins throughout. Rock soft, tacy at 312-328'.	2.5/4		328	332									
			5.5/8.5		332	340.5									

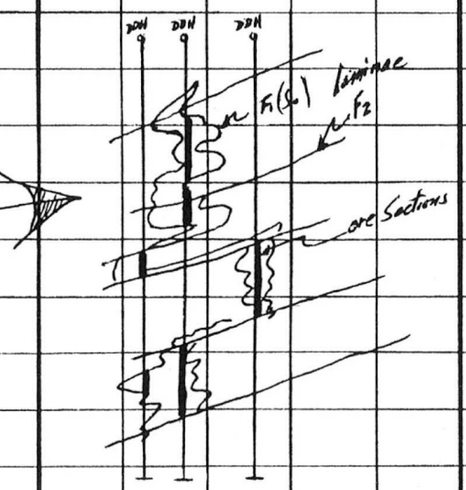

DIAMOND DRILL RECORD

LOGGED BY S. B. Reamsbottom

PROPERTY

LATITUDE BEARING OF HOLE STARTED

DEPARTURE DIP OF HOLE COMPLETED

ELEVATION DIP TESTS DEPTH Proposed: Ultimate:

D.D.H. No. 75-A80 PAGE 2 of 7

CLAIM No.

N — DIRECTION AND DISTANCE FROM NE. CLAIM POST

FOOTAGE FROM	FOOTAGE TO	DESCRIPTION	Rec. Ft.	Sample No.	Footage From	Footage To	Sample Length	Assay Pb	Assay Zn	Assay Ag	Assay Au	Assay Cu	Assay x Feet Pb	Assay x Feet Zn	Assay x Feet Ag
129.54 425	141.12 463	BLACK, STRIPED, QUARTZ - GRAPHITIC PHYLLITE G													
		Minor pyrite, red sphalerite in F2 foliation: 444', 453'. Good F2 folds. Tension fractures with pyrite and quartz. Thin	2/4		374	378									
		veins cc.	2/5		378	383									
		Core Angle: 430' = 70°, 440' = 62°, 450' = 72°, 460' = 75°.													
463	152.4 500	GRAY-GREEN, QUARTZ - SERICITE PHYLLITE S													
		Note limey, similar to green chlorite-sericite phyllites in upper part of section.		Good Recovery.											
		Core Angle: 470' = 66°, 480' = 59°, 490' = 66°, 500' = 71°.													
500	159.11 522	GRADES TO GRAY, SERICITE PHYLLITE S													
		With minor chlorite, graphite. Minor pyrite blebs and stringers.		Good Recovery.											
		Core Angle: 510' = 70°, 520' = 75°.													
522	163.98 538	GRADES TO BLACK, QUARTZ - GRAPHITIC PHYLLITE G													
		Minor blebs, stringers pyrite, pyrrhotite, sphalerite. Quartz, cc veins.													
		Core Angle: 530' = 67°.													

DIAMOND DRILL RECORD

LOGGED BY S. B. Reamsbottom

PROPERTY

LATITUDE BEARING OF HOLE STARTED

DEPARTURE DIP OF HOLE COMPLETED

ELEVATION DIP TESTS DEPTH Proposed: Ultimate:

D.D.H. No. 75-A80 PAGE 3 of 7

CLAIM No.

N

DIRECTION AND DISTANCE FROM NE. CLAIM POST

FOOTAGE FROM	FOOTAGE TO	DESCRIPTION	Rec. Ft.	Sample No.	Footage From	Footage To	Sample Length	Assay Pb	Assay Zn	Assay Ag	Assay Au	Assay Cu	Assay x Feet Pb	Assay x Feet Zn	Assay x Feet Ag
163.98 538	171.14 561.5	GREEN-GRAY, QUARTZ - SERICITE - CHLORITE PHYLLITE Sc Carbonate rich. Soft. Quite phyllitic.													
		Core Angle: 540' = 74°, 550' = 70°, 560' = 63°.													
561.5	182.27 598	BLACK, STRIPED, QUARTZ - GRAPHITIC PHYLLITE G Weakly mineralized: 1-3% sulphide, pyrite, minor pyrrhotite and odd blebs of sphalerite between 569-598'.													
		Core Angle: 570' = 75°, 580' = 60°, F2 fold, 590' = 67°.													
598	191.72 629	GRAY-GREEN, QUARTZ - SERICITE PHYLLITE S													
		Locally chlorite rich (green tinge) Also minor graphite. Quartz-chlorite veins. Tension gashes filled by quartz-carbonate	3/5		603	608									
		Rock broken between 603-618'.	5/6		608	614									
		Core Angle: 600' = 59°, 610' = 65°, 620' = 62°.	1/4		614	618									
629	221.28 726	DARK GRAY, SERICITE - QUARTZ PHYLLITE S													
		Thinly laminated quite micaceous. Quartz-chlorite veins. Minor pyrite in quartz veins. Quartz has dark green tinge. Note dark	2/4		642	646									
		brown biotite in quartz vein @ 639'.	3/5		646	651									
		Core Angle: 630' = 70°, 640' = 51°, 650' = 60°, 660' = 58°, 670' = 56°, 680' = 44°, 690' = 55°, 700' = 79°.	8/10		658	668									

DIAMOND DRILL RECORD

LOGGED BY S. B. Reamsbottom

PROPERTY

LATITUDE BEARING OF HOLE STARTED

DEPARTURE DIP OF HOLE COMPLETED

ELEVATION DIP TESTS DEPTH Proposed: Ultimate:

D.D.H. No. 75-A80 PAGE 4 of 7

CLAIM No.

N

DIRECTION AND DISTANCE FROM NE. CLAIM POST

FOOTAGE FROM	FOOTAGE TO	DESCRIPTION	Rec. Ft.	Sample No.	Footage From	Footage To	Sample Length	Assay Pb	Assay Zn	Assay Ag	Assay Au	Assay Cu	Assay x Feet Pb	Assay x Feet Zn	Assay x Feet Ag
		710' = 70°, 720' = 65°.	3.5/5		668	673		Rock	broken						
			4.2/6		673	679		Rock	broken						
			1.8/2		679	681		Mud	gouge						
			3.5/7		681	688		Rock	broken						
			4/5		688	693		Rock	broken						
221.28 726	228.90 751	DARK GRAY-BLACK, GRAPHITE PHYLLITE G	5/9		693	702		Rock	broken						
		Thinly laminated, micaceous.	/10		728	738									
		Core Angle: 730' = 76°, 740' = 69°, 750' = 56°.	3.5/7		751	758									
751	243.84 800	Grades Back to DARK GRAY, QUARTZ - SERICITE PHYLLITE. LESS GRAPHITE ≤ G	5/7		774	781									
		F2 folds. Essentially same as above with graphite.	1/3.5		795	799.5		Rock	broken						
		Core Angle: 760' = 45°, 770' = 70°, 780' = 62°, 790' = 70°, 800' = 70°.	5/8		800	808		Rock	broken						
					808	813		Rock	broken						
800	248.11 814	BLACK, GRAPHITE - QUARTZ PHYLLITE G													
		Thinly laminated.													
		Core Angle: 810' = 67°.													

DIAMOND DRILL RECORD

LOGGED BY S. B. Reamsbottom

PROPERTY

LATITUDE BEARING OF HOLE STARTED

DEPARTURE DIP OF HOLE COMPLETED

ELEVATION DIP TESTS DEPTH Proposed: Ultimate:

D.D.H. No. 75-A80 PAGE 5 of 7

CLAIM No.

N

DIRECTION AND DISTANCE FROM NE. CLAIM POST

FOOTAGE FROM	FOOTAGE TO	DESCRIPTION	Rec. Ft.	Sample No.	Footage From	Footage To	Sample Length	Assay Pb	Assay Zn	Assay Ag	Assay Au	Assay Cu	Assay x Feet Pb	Assay x Feet Zn	Assay x Feet Ag
248.11 814	264.87 869	GRAY, QUARTZ - SERICITE PHYLLITE S			249.42	249.63									
		Rock broken, muddy @ 814-837'. Veins of quartz-buff carbonate. Fragments of brecciated high grade sulphide (818.3-819')	10.7		818.3	819		8-10% lead-zinc estimate							
		Slightly bleached 10-15' before sulphide section. Minor pyrite.			824.5 249.91	827 252.07		Muddy gouge							
		Core Angle: 820' = 60°, 830' = 55°, 840' = 76°, 850' = 61°, 860' = 83°, 870' = 50°.			829	832		Broken rock							
869	270.05 886	MINERALIZED, QUARTZ - GRAPHITIC PHYLLITE G													
		Quartzitic: fine-grained bleby pyrite, sphalerite, minor galena, pyrite-pyrrhotite in late tension gashes.	5.4	1723	869	874.5	5.5	.70	1.44	.24					
		8-15% sulphide: lead-zinc varies 4-6%.	5	1724	874.5	879.5	5.0	1.10	1.80	.44					
		No. 1723 -- mineralized quartz-graphitic phyllite: 8% sulphide, 3% lead-zinc	5.5	1725	879.5	885	5.5	1.25	2.34	.53					
		No. 1724 -- mineralized quartz-graphitic phyllite, 10% sulphide, 5-6% lead-zinc		Wt. Av	869.0	885.0	16.0	2.9	Pb Zn						
		No. 1725 -- mineralized quartz-graphitic phyllite, 10% sulphide, 6% lead-zinc			264.9M	269.7M	4.9M								
		Core Angle: 880' = 76°.													
886	304.19 998	PALE GREEN-WHITE, QUARTZ - SERICITE - CHLORITE PHYLLITE Sc													
		Rock quite sericite rich. Bleached below sulphide section. Blebs and stringers of pyrite-pyrrhotite throughout section.		Good Recovery.											
		Looks grayer between 920-940'. Rock has dark brownish biotite. N.B. Biotite in 915', Pyrrhotite at 925'. Quartz-chlorite													
		veins. Thin pyrite, marcasite bands @ 980'. Minor chalcopyrite.													

DIAMOND DRILL RECORD

LOGGED BY S. B. Reamsbottom

PROPERTY

LATITUDE BEARING OF HOLE STARTED

DEPARTURE DIP OF HOLE COMPLETED

ELEVATION DIP TESTS DEPTH Proposed: Ultimate:

D.D.H. No. 75-A80 PAGE 6 of 7

CLAIM No.

N

DIRECTION AND DISTANCE FROM NE. CLAIM POST

FOOTAGE FROM	FOOTAGE TO	DESCRIPTION	Rec. Ft.	Sample No.	Footage From	Footage To	Sample Length	Assay Pb	Assay Zn	Assay Ag	Assay Au	Assay Cu	Assay x Feet Pb	Assay x Feet Zn	Assay x Feet Ag
		Core Angle: 890' = 76°, 900' = 70°, 910' = 70°, 920' = 75°, 930' = 67°, 940' = 60°, 950' = 76°, 960' = 75°, 970' = 86°, 980' = 70°, 990' = 80°.													
304.19 998	320.04 1050	GREEN-GRAY, QUARTZ - SERICITE - CHLORITE PHYLLITE Sc Thinly laminated, not as quartz-sericite rich as above phyllite. Rock broken from 1015-1028'-- poker chips. Core Angle: 100' = 75°, 1010' = 76°, 1020' = 85°, 1020' = 85° 1030' = 80°, 1040' = 75°, 1050' = 81°.													
1050	330.71 1085	GRADES TO PALE WHITE-GREENISH, QUARTZ - SERICITE - CHLORITE S PHYLLITE More quartz-sericite than above unit. Rocks broken from 1055 -1066'. Locally soft, gougy. Minor pyrite in foliation. Core Angle: 1060' = 60°, 1070' = 85°, 1080' = 57°.		Good Recovery.											
1085	3377.18 1108	DARK GRAY-BLACK, GOUGED, MUDDY, MYLONIZED GRAY SERICITE PHYLLITE Sf Thick fault-shear zone marginal to batholith. Note minor pyrite crystals. Core Angle: 1090' = 43 , 1100' = Mud gouge.		Good Recovery.											

DIAMOND DRILL RECORD

LOGGED BY S. B. Reamsbottom

PROPERTY _____

LATITUDE _____ BEARING OF HOLE _____ STARTED _____

DEPARTURE _____ DIP OF HOLE _____ COMPLETED _____

ELEVATION _____ DIP TESTS _____ DEPTH Proposed: Ultimate: _____

D.D.H. No. 75-A80 PAGE 7 of 7

CLAIM No. _____

N

DIRECTION AND DISTANCE FROM NE. CLAIM POST

FOOTAGE FROM	FOOTAGE TO	DESCRIPTION	Rec. Ft.	Sample No.	Footage From	Footage To	Sample Length	Assay Pb	Assay Zn	Assay Ag	Assay Au	Assay Cu	Assay x Feet Pb	Assay x Feet Zn	Assay x Feet Ag
337.72	346.25	FOLIATED													
1108	1136	WHITE BLEACHED MEDIUM-GND MUSCOVITE GRANITE ++ granite													
		Highly altered. Sericite, kaolinized feldspar, epidotized (saussutite).		Good Recovery.											
	1136	END OF HOLE													
		REMARKS: 1. Reasonably "clean" hole.													
		2. Cemented from bottom upwards - used 12 bags of cement.													

DDH: FAGA080 -- 42 DEGREE PROFILE

(VIEW AZIMUTH = 312 DEGREES)

ELEV:1300 592419E ; 905300N

PLUNGE ANGLE IS 11.0 TREND ANGLE IS 312.0

CORRECTED COLLAR POSITION: X = 803.3 Z = 1299.6

SECTION NAME: 78W

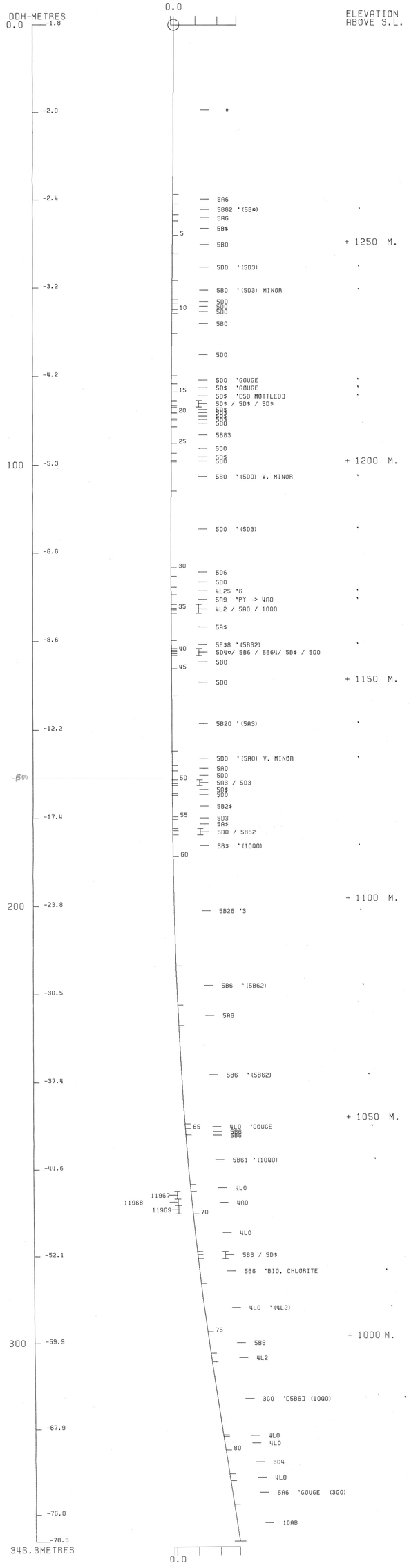

CYPRUS ANVIL MINING CORPORATION
PROGRAM DH162 11 DEC 1984 10:11 AM

DDH: FAGA080 -- 42 DEGREE PROFILE

(VIEW AZIMUTH = 312 DEGREES)

ELEV:1300 592419E ; 905300N

PLUNGE ANGLE IS 11.0 TREND ANGLE IS 312.0

CORRECTED COLLAR POSITION: X = 803.3 Z = 1299.6

SECTION NAME: 78W

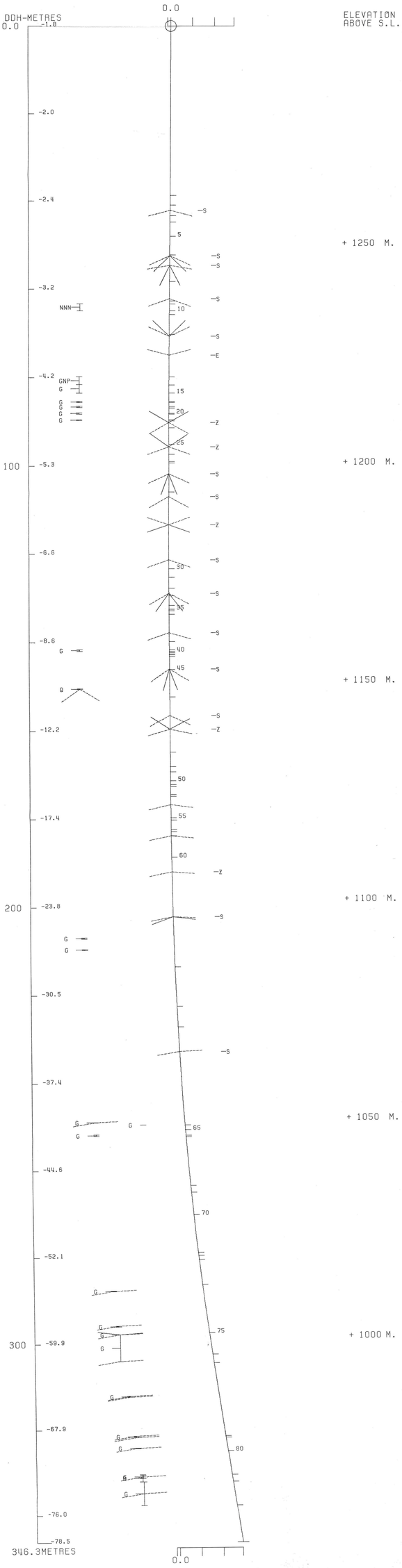

CYPRUS ANVIL MINING CORPORATION
PROGRAM DH161 11 DEC 1984 3:46 PM

FAGA082

DRILL HOLE : FAGA082

NORTHING : 905,167.6

EASTING : 592,295.3

ELEVATION : 1,301.7

TOTAL DEPTH : 364.1

SECTION : W 78

R.F.E. : S2

RFE DIRECTION: 230

PLUNGE ANGLE : 11

PLUNGE DIRECT: 312

DHD CALC: 1

SS CALC: 1

DETAIL RECORD COUNTS:

NOS ORE-SAMPLES: 18

NOS DOWN-H-SURVEYS: 7

NOS DOWN-H-LITHOLOGY: 82

NOS DOWN-H-STRUCTURE: 52

NOS DOWN-H-FAULTS: 29

NOS DOWN-H-SPLINES: 7

NOS COMPOSITES: 0

DDH: FAGA082 UTM-N: 905,167.6 UTM-E: 592,295.3 UTM-ELEV: 1,301.7 TOTAL DEPTH: 364.1 SECTION: W 78
RFE: S2 RFE DIR: 230 PLUNGE ANGLES: 11 312 DHD CALC: 1 SS CALC: 1

DEPTHS FROM	DEPTHS TO	SAMPLE NO.	INT.	REC.	ROCK UNIT	ASSAYS S.G. PULP	CU %	PB %	ZN %	AG(AA) G/MT	AG(FA) G/MT	AU(FA) G/MT	PO %	PY %	TOT FE	BAO %	HG %	MN %	AS %	BA %	S.G. W.R.
97.5	98.3	91597	.8	.0	4D7			2.77	5.04	20.19											
102.2	103.9	91598	1.7	.0	4C0			1.80	3.06	28.49											
103.9	105.2	91599	1.3	.0	4D0			1.97	3.41	28.49											
114.3	115.8	90377	1.5	.0	4A4			1.62	3.60		33.29										
118.7	120.7	91600	2.0	.0	4E4			6.15	10.36	91.90											
121.8	123.4	91601	1.6	.0	4D0			2.08	3.29	44.20											
123.4	124.9	91602	1.5	.0	4D0			2.04	3.12	44.20											
137.1	138.9	91603	1.8	.0	4AE			3.29	6.45	41.50											
273.4	274.1	91604	.7	.0	4G4			4.71	9.40	90.79											
292.2	293.7	91605	1.5	.0	4A4			3.52	4.44	54.50											
293.7	295.2	91606	1.5	.0	4A4			2.23	4.44	33.29											
320.7	322.2	91607	1.5	.0	4E46			4.92	6.34	72.70											
327.2	328.7	91608	1.5	.0	4E48			4.28	3.18	45.29											
328.7	330.3	91609	1.6	.0	4D0			3.97	1.34	40.39											
330.3	331.8	91610	1.5	.0	4E81			1.37	1.86	16.09											
331.8	333.3	91611	1.5	.0	4E81			1.34	1.56	19.19											
333.3	334.8	90375	1.5	.0	4E81			2.20	3.77		23.30										
334.8	336.3	90376	1.5	.0	4C78			1.44	2.73		18.19										
WEIGHTED AVERAGE																					
97.5	98.3		.8	.0				2.77	5.04	20.19											
102.2	105.2		3.0	.0				1.87	3.21	28.49											
114.3	115.8		1.5	.0				1.62	3.60		33.29										
118.7	120.7		2.0	.0				6.15	10.36	91.90											
121.8	124.9		3.1	.0				2.06	3.21	44.20											
137.1	138.9		1.8	.0				3.29	6.45	41.50											
273.4	274.1		.7	.0				4.71	9.40	90.79											
292.2	295.2		3.0	.0				2.87	4.44	43.89											
320.7	322.2		1.5	.0				4.92	6.34	72.70											
327.2	336.3		9.1	.0				2.45	2.39	20.38	6.84										

DDH: FAGA082 UTM-N: 905,167.6 UTM-E: 592,295.3 UTM-ELEV: 1,301.7 TOTAL DEPTH: 364.1 SECTION: W 78
RFE: S2 RFE DIR: 230 PLUNGE ANGLES: 11 312 DHD CALC: 1 SS CALC: 1

DEPTH	ZENITH	AZIMUTH
0.000	180.000	0.000
61.600	175.000	149.500
122.500	169.000	147.000
183.500	166.000	148.500
238.400	167.000	133.500
293.200	168.000	119.500
360.300	167.000	120.500

DDH: FAGA082 UTM-N: 905,167.6 UTM-E: 592,295.3 UTM-ELEV: 1,301.7 TOTAL DEPTH: 364.1 SECTION: W 78
RFE: S2 RFE DIR: 230 PLUNGE ANGLES: 11 312 DHD CALC: 1 SS CALC: 1

DEPTH	UNIT	CODE	DESC	RECOVERY	IND
11.9	0001	#		0.5-	1
18.4	0002	5B$	(5D$) SOME CORE LOST	0.5-	1
35.2	0003	5B0	(5D0) V. MINOR	0.5-	1
43.0	0004	5DC		0.5-	1
50.6	0005	5B3	(5E0)	0.5-	1
51.1	0006	5D4@		0.5-	1
52.3	0007	5B0		0.5-	1
53.0	0008	5DC		0.5-	1
53.6	0009	5E0		0.5-	1
58.1	0010	5D0		0.5-	1
67.8	0011	5B20	(5D4*)	0.5-	1
72.1	0012	5D40	$ WEAK	0.5-	1
78.9	0013	5B0	(5B3)	0.5-	1
79.9	0014	5D4$		0.5-	1
95.2	0015	5B3	(5B0)	0.5-	1
97.5	0016	5A0		0.5-	1
98.3	0017	4D7		0.5-	1
98.5	0018	5D4$		0.5-	1
99.4	0019	5A19	PY, SPHAL	0.5-	1
102.3	0020	5D$	(5D@)	0.5-	1
105.2	0021	4C0	PHYLLITIC(4D0PHYLLITIC)AT BASE	0.5-	1
105.5	0022	5D4$		0.5-	1
105.9	0023	5A19	(4C0 PHYLLITIC)	0.5-	1
106.1	0024	5D4$		0.5-	1
114.4	0025	5A0	(5B80)	0.5-	1
115.5	0026	4A4		0.5-	1
117.6	0027	4A0		0.5-	1
118.7	0028	5D4*		0.5-	1
120.7	0029	4E4	NO CORE	0.5-	1
121.8	0030	4A0		0.5-	1
124.9	0031	4D0		0.5-	1
125.0	0032	5B6	GOUGE	0.5-	1
133.2	0033	5B6		0.5-	1
137.1	0034	5B6	GOUGE	0.5-	1
137.8	0035	4E4	BXA	0.5-	1
138.5	0036	4A4		0.5-	1
138.9	0037	4L41	2 [4D0 PHYLLITIC]	0.5-	1
139.2	0038	4L0		0.5-	1
139.7	0039	5A19		0.5-	1
140.7	0040	5D4@		0.5-	1
151.7	0041	5A0		0.5-	1
154.8	0042	5A3	(5B23)	0.5-	1
155.5	0043	5D3		0.5-	1
155.9	0044	5A$		0.5-	1
156.3	0045	5D4$		0.5-	1
158.5	0046	5A$	PHYLLITIC	0.5-	1
173.6	0047	5B6	(5B62) (10Q0)	0.5-	1
194.8	0048	5B6	(5B$) (10Q0)	0.5-	1
212.0	0049	5A$		0.5-	1
212.5	0050	5DC	(5A$)	0.5-	1
223.3	0051	5A$	(5A0)	0.5-	1

DDH: FAGA082 UTM-N: 905,167.6 UTM-E: 592,295.3 UTM-ELEV: 1,301.7 TOTAL DEPTH: 364.1 SECTION: W 78
RFE: S2 RFE DIR: 230 PLUNGE ANGLES: 11 312 DHD CALC: 1 SS CALC: 1

DEPTH	UNIT	CODE	DESC	RECOVERY	IND
223.5	0052	5D0		0.5-	1
226.2	0053	5A69		0.5-	1
252.7	0054	5B6	(5B62) (10Q0)	0.5-	1
254.3	0055	5B6	(5B62) GOUGE	0.5-	1
273.4	0056	5A0	(5A$)	0.5-	1
274.1	0057	4G4	(4E4)	0.5-	1
284.2	0058	5B6		0.5-	1
284.7	0059	4L0		0.5-	1
285.2	0060	5D4*		0.5-	1
285.4	0061	5B6		0.5-	1
286.8	0062	5B6		0.5-	1
287.3	0063	4A0	BXA	0.5-	1
289.7	0064	5D$		0.5-	1
292.2	0065	5D4@	(5B64)	0.5-	1
295.2	0066	4A4		0.5-	1
298.2	0067	4L0		0.5-	1
307.4	0068	5B62		0.5-	1
312.3	0069	4L0	(4L0 BIO)	0.5-	1
313.3	0070	4D@		0.5-	1
314.1	0071	4L42	87	0.5-	1
320.7	0072	4L0	(4L27)	0.5-	1
322.2	0073	4E46	NO CORE	0.5-	1
322.3	0074	4L0		0.5-	1
325.5	0075	5A9	(5B624)(4A0) MINOR	0.5-	1
327.2	0076	4L07		0.5-	1
328.7	0077	4E48	NO CORE	0.5-	1
330.3	0078	4D0	NO CORE	0.5-	1
334.1	0079	4E81	7	0.5-	1
341.2	0080	4C78		0.5-	1
345.5	0081	4C0	PHYLLITIC [4L341]	0.5-	1
364.2	0082	4L0	(4L2)	0.5-	1

DDH: FAGA082 UTM-N: 905,167.6 UTM-E: 592,295.3 UTM-ELEV: 1,301.7 TOTAL DEPTH: 364.1 SECTION: W 78
RFE: S2 RFE DIR: 230 PLUNGE ANGLES: 11 312 DHD CALC: 1 SS CALC: 1

DDH	F DEPTH	T DEPTH	FEAT	SYMTRY	S0 ANGLE	S0 DIRECT	S1 ANGLE	S1 DIRECT	S2 ANGLE	S2 DIRECT	RFE CDE	DHDC	SDC	PROCESS
FAGA082	0.0	14.6	PS2		0	0	0	0	70	230	0	1	1	1
FAGA082	0.0	26.2	CS2	Z	0	0	0	0	80	230	0	1	1	1
FAGA082	0.0	34.4	CS2	S	0	0	0	0	75	230	0	1	1	1
FAGA082	0.0	37.5	CS2	S	0	0	0	0	75	230	0	1	1	1
FAGA082	0.0	41.9	CS2	D	0	0	25	0	80	230	0	1	1	1
FAGA082	0.0	47.9	CS2	S	0	0	30	0	70	230	0	1	1	1
FAGA082	0.0	58.2	CS2	S	0	0	30	0	75	230	0	1	1	1
FAGA082	0.0	69.2	PS2		0	0	0	0	80	230	0	1	1	1
FAGA082	0.0	77.4	CS2	Z	0	0	0	0	75	230	0	1	1	1
FAGA082	0.0	85.8	CS2	S	0	0	40	0	80	230	0	1	1	1
FAGA082	0.0	93.4	CS2	S	0	0	50	0	65	230	0	1	1	1
FAGA082	0.0	98.8	CS2	S	0	0	45	0	70	230	0	1	1	1
FAGA082	0.0	107.6	CS2	Z	0	0	0	0	70	230	0	1	1	1
FAGA082	0.0	113.1	CS2	D	0	0	0	0	80	230	0	1	1	1
FAGA082	0.0	125.6	CS2	Z	0	0	80	180	80	230	0	1	1	1
FAGA082	0.0	129.8	CS2	S	0	0	35	0	80	230	0	1	1	1
FAGA082	0.0	138.7			0	0	0	0	80	230	0	1	1	1
FAGA082	0.0	145.7	CS2	S	0	0	10	0	70	230	0	1	1	1
FAGA082	0.0	157.6	CS2	Z	0	0	50	180	80	230	0	1	1	1
FAGA082	0.0	163.4	CS2	Z	0	0	55	180	70	230	0	1	1	1
FAGA082	0.0	173.1	CS2	Z	0	0	30	180	75	230	0	1	1	1
FAGA082	0.0	178.3	CS2	S	0	0	15	0	80	230	0	1	1	1
FAGA082	0.0	187.6	CS2	Z	0	0	60	180	70	230	0	1	1	1
FAGA082	0.0	191.7	CS2	S	0	0	0	0	80	230	0	1	1	1
FAGA082	0.0	200.7	CS2	3	0	0	0	0	85	230	0	1	1	1
FAGA082	0.0	209.2	CS2	Z	0	0	50	180	80	230	0	1	1	1
FAGA082	0.0	212.3	CS2	S	0	0	0	0	80	230	0	1	1	1
FAGA082	0.0	223.1	CS2	Z	0	0	35	180	70	230	0	1	1	1
FAGA082	0.0	228.8	CS2	D	0	0	0	0	80	230	0	1	1	1
FAGA082	0.0	234.7	CS2	D	0	0	0	0	65	230	0	1	1	1
FAGA082	0.0	241.7	CS2	Z	0	0	60	180	70	230	0	1	1	1
FAGA082	0.0	244.8	CS2	Z	0	0	10	180	75	230	0	1	1	1
FAGA082	0.0	251.2	CS2	Z	0	0	55	180	75	230	0	1	1	1
FAGA082	0.0	257.6	CS2	Z	0	0	10	180	75	230	0	1	1	1
FAGA082	0.0	267.8	CS2	Z	0	0	0	0	80	230	0	1	1	1
FAGA082	0.0	271.0	CS2	E	0	0	0	0	80	230	0	1	1	1
FAGA082	0.0	276.6	CS2	S	0	0	20	0	70	230	0	1	1	1
FAGA082	0.0	279.8	CS2	S	0	0	20	0	60	230	0	1	1	1
FAGA082	0.0	289.7	CS2	3	0	0	0	0	55	230	0	1	1	1
FAGA082	0.0	297.6	CS2	Z	0	0	55	180	70	230	0	1	1	1
FAGA082	0.0	300.5	CS2	Z	0	0	65	180	55	230	0	1	1	1
FAGA082	0.0	304.3	CS2	Z	0	0	75	180	75	230	0	1	1	1
FAGA082	0.0	309.1	CS2	Z	0	0	60	180	70	230	0	1	1	1
FAGA082	0.0	315.9	CS2	Z	0	0	70	180	70	230	0	1	1	1
FAGA082	0.0	325.5	CS2	Z	0	0	40	180	80	230	0	1	1	1
FAGA082	0.0	330.9	PS2		0	0	0	0	85	230	0	1	1	1
FAGA082	0.0	337.4	PS2		0	0	0	0	85	230	0	1	1	1
FAGA082	0.0	343.2	PS2		0	0	0	0	90	230	0	1	1	1
FAGA082	0.0	347.5	CS2	Z	0	0	50	180	55	230	0	1	1	1
FAGA082	0.0	353.0	CS2	Z	0	0	25	180	75	230	0	1	1	1
FAGA082	0.0	357.8	CS2	3	0	0	0	0	90	230	0	1	1	1

DDH: FAGA082 UTM-N: 905,167.6 UTM-E: 592,295.3 UTM-ELEV: 1,301.7 TOTAL DEPTH: 364.1 SECTION: W 78
RFE: S2 RFE DIR: 230 PLUNGE ANGLES: 11 312 DHD CALC: 1 SS CALC: 1

DDH	F DEPTH	T DEPTH	FEAT	SYMTRY	S0 ANGLE	S0 DIRECT	S1 ANGLE	S1 DIRECT	S2 ANGLE	S2 DIRECT	RFE CDE	DHDC	SDC	PROCESS
FAGA082	0.0	363.9	CS2	D	0	0	0	0	80	230	0	1	1	1

DDH: FAGA082 UTM-N: 905,167.6 UTM-E: 592,295.3 UTM-ELEV: 1,301.7 TOTAL DEPTH: 364.1 SECTION: W 78
RFE: S2 RFE DIR: 230 PLUNGE ANGLES: 11 312 DHD CALC: 1 SS CALC: 1

DDH	F DEPTH	T DEPTH	FEAT	REC CD	PARLL	UPPER PLANE		INTERNAL PLANE		LOWER PLANE		DHD
FAGA082	11.8	21.3	NNN	5		0	0	0	0	0	0	1
FAGA082	65.5	65.7	G			0	0	0	0	99	999	1
FAGA082	65.8	67.3	P	1		0	0	0	0	0	0	1
FAGA082	82.4	83.0	G			0	0	0	0	99	999	1
FAGA082	92.7	92.9	G			0	0	0	0	0	0	1
FAGA082	100.5	102.1	BG			0	0	0	0	0	0	1
FAGA082	0.0	105.4	G			0	0	99	999	0	0	1
FAGA082	105.8	106.0	G			0	0	0	0	0	0	1
FAGA082	111.8	112.6	G			0	0	99	999	0	0	1
FAGA082	116.4	117.0	G			99	999	0	0	0	0	1
FAGA082	118.7	120.7	NNN			0	0	0	0	0	0	1
FAGA082	121.8	122.3	B	5		0	0	0	0	0	0	1
FAGA082	124.9	124.9	G			0	0	0	0	0	0	1
FAGA082	133.1	137.0	G	3		0	0	99	999	0	0	1
FAGA082	137.0	137.7	X			0	0	0	0	0	0	1
FAGA082	160.6	161.6	Q			0	0	0	0	0	0	1
FAGA082	168.7	170.0	Q			0	0	0	0	0	0	1
FAGA082	172.3	172.5	Q			0	0	0	0	0	0	1
FAGA082	180.3	184.2	Q			0	0	0	0	0	0	1
FAGA082	242.4	242.9	Q			0	0	0	0	0	0	1
FAGA082	0.0	251.6	G			0	0	99	999	0	0	1
FAGA082	252.6	254.2	GB			0	0	99	999	0	0	1
FAGA082	281.2	281.7	G			0	0	0	0	50	180	1
FAGA082	283.7	283.9	G			0	0	0	0	99	999	1
FAGA082	285.3	286.8	G			99	999	0	0	99	999	1
FAGA082	286.8	286.9	G			0	0	0	0	0	0	1
FAGA082	286.8	287.3	X			0	0	0	0	0	0	1
FAGA082	320.6	322.1	NNN			0	0	0	0	0	0	1
FAGA082	327.2	330.2	NNN			0	0	0	0	0	0	1

DDH: FAGA082 UTM-N: 905,167.6 UTM-E: 592,295.3 UTM-ELEV: 1,301.7 TOTAL DEPTH: 364.1 SECTION: W 78
RFE: S2 RFE DIR: 230 PLUNGE ANGLES: 11 312 DHD CALC: 1 SS CALC: 1

DDH	SEGMENT NOS	COND INDICATOR
FAGA082	1	2
FAGA082	2	2
FAGA082	3	2
FAGA082	4	2
FAGA082	5	2
FAGA082	6	2
FAGA082	7	1

CYPRUS ANVIL MINING CORPORATION

DIAMOND DRILL CORE LOG

Date: 21 SEP 81

Hole Number: FAGA 082

Project: GRUM RELOG 81

Location: 78 W.

Claim:

U.TM.
~~Terr~~.Plane
Co-ords.: 905167.6 N

1979 HIW Survey

592295.2 E (3 rounding)

Grid
Co-ords:

Elevation: 1301.7 m.

Reference Fabric Orientation Diagram:

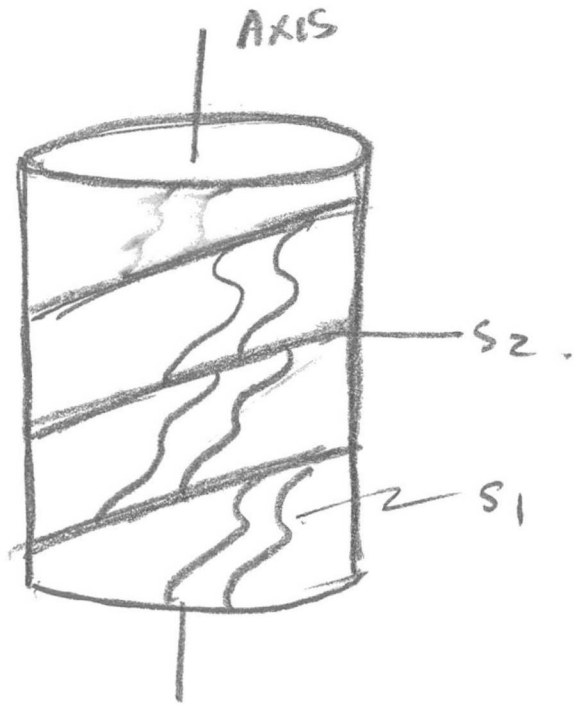

All symmetry determinations looking

NW with S2 dipping

SW with dip azimuth 230

Total Depth: 1195 FEET

Purpose: GRUM S/D.

Reason hole
Terminated:

Logged by: PSJ - JGS

Date(s) Logged: 21 Sept 81

Drilling
Contractor: Cameron McLatchie

Size	CORE From	To
BQ	0	1195

Collar Cased and Capped: ____

Hole
Cemented:

Steel down
hole:

Started: 5 JUN 75 Completed: 12 JUN 75

Cyprus Anvil Mining Corp.

DDH FAGA082 (2 8)

Diamond Drill Core Log Date: 21 SEP81 Logged By: DST - JGS

Code	Drillhole	Elevation	Northing	Easting	Units (feet/metres)	R.F.E.	
1	2 8	10 16	17 24	25 32	34 39	41 42	
T	FAGA082	1391.7	9051671.6	592295.3	FEET	52	

Code	Drillhole	Depth	Zenith Angle	True Azimuth	Comments
1	2 8	10 14	22 26	28 32	34 56
R	FAGA082	00	180.0	0.0	AT COLLAR
R	FAGA082	2020	175.0	149.5	
R	FAGA082	4020	169.0	147.0	
R	FAGA082	6020	166.0	148.5	
R	FAGA082	7820	167.0	133.5	
R	FAGA082	9620	168.0	119.5	
R	FAGA082	11820	167.0	120.5	

Code	Drillhole	Comments, Errant Remarks, Snivellings and / or Lewd Suggestions
1	2 8	10 56

DDH FAGA082 (2 – 8)

Cyprus Anvil Mining Corp.

Lithologic Log

Date: 21 SEP 81 Logged By: DSJ - JGS

FEET

Code	From	To	Recov.	No.	Unit	Description
1	10 14	16 20	22 24	26 28	30 34	35
L	100	390		01	*1	OB
L	390	605		02	5B1*	DOL (5D * DOL) 39 - 70 ½ CORE LOST SPILT BOX?
L	605	1155		03	5B10	(5DO) very minor
L	1155	1412		04	5DO	
L	1412	1660		05	5B3	(5EO)
L	1660	1678		06	5D4*	ANK no fusch
L	1678	1715		07	5B0	
L	1715	1738		08	5DO	
L	1760	1760		09	5EO	
L	1760	1906		10	5DO	
L	1906	2225		11	5B20	(5D4*) non fusch. Gouge 215.1 - 5.7 UC/IND LC/11S2
L	2225	2365		12	5D40	wkly DOL → 216-221 0.6' REC F.
L	2365	2590		13	5B0	(5B3)
L	2590	2620		14	5D4*	DOL
L	2620	3124		15	5B3	(5BO) GOUGE 270.4 - 272.5 UC/IND LC/ 11S2; 304.2 - 304.9 NIL ATT
L	3124	3200		16	5A0	
L	3200	3225		17	4D7	
L	3225	3230		18	5D4*	DOL + fusch 2%
L	3230	3260		19	5A19	[py sphal] minor ?
L	3260	3355		20	5D*	DOL (5D*ANK) F. 330 - 335.0 Blk Core Gouge M/Nt.
L	3355	3451		21	4DO	PHYLL 4CO PHYLLITIC (4DO PHYLLITIC) AT BASE
L	3451	3460		22	5D4*	DOL 1-2% fusch. Gouge 11 Sz 346.0 — see assays
L	3460	3474		23	5A19	(4C PHYLL) end of int 47 - 47.4
L	3474	3480		24	5D4*	GOUGE / DOL NO ATT.
L	3480	3753		25	5A0	(5BZO) Gouge 367- 369.7 11Sz; 382 - 384 11Sz
L	3763	3788		26	4A4	
L	3788	3858		27	4A0	GOUGE 382.0 - 384 UC 11 Sz LC ind.
L	3858	3895		28	5D4*	
L	3895	3960		29	4E4	INTERP K/A LOG
L	3960	3995		30	4AO	
L	3995	4098		31	4DD	GOUGE 399.7 - 401.5 Blk Core REC 1'
L	4098	4100		32	5B6	GOUGE F. NO ATT.
L	4100	4370		33	5B6	
L	4370	4498		34	5B6	GOUGE 5' REC int gouge 11 Sz 442-443' REC ONLY
L	4498	4520		35	4E4	BRECCIA A non calc phyll matrix 4A4 clasts
L	4520	4543		36	4A4	

DDH FAGA-082 (2 — 8)

Cyprus Anvil Mining Corp.

Lithologic Log

Date: 21 SEP 81 Logged By: DSJ - JGS

Code	From	To	Recov.	No.	Unit	Description
1	10 14	16 20	22 24	26 28	30 34	35
L	4543	4558		37	4L41	2 [4DO PHYLL]
L	4558	4568		38	4LO	
L	4568	4583		39	5A19	
L	4583	4615		40	5D4x	ANK.
L	4615	4977		41	5AO	
L	4977	5080		42	5A3	(5B23)
L	5080	5103		43	5D3	
L	5103	5114		44	5A*	DOL
L	5111	5129		45	5D4*	DOL
L	5129	5200		46	5A*	PHYLL. minor sphal-gal 11S1
L	5200	5619		47	5B6	(5B62) (10QO) → 527-530.5; 553.5-558; 565.5-566.1
L	5619	6390		48	5B6	(5B* DOL) (10QO) → 591.7-604.6.
L	6390	6956		49	5A*	DOL S1 FOL cream. 20% ACID V. FORMIN?
L	6956	6973		50	5DO	(5A*DOL)
L	6973	7325		51	5A*	DOL (5AO) Calc.
L	7325	7334		52	5DO	
L	7334	7420		53	5A69	minor sphal 11S2 with QV.
L	7420	8290		54	5B6	(5B62) (10QO) → 795.4-797.0 / GOUGE 825.6 11S2
L	8290	8343		55	5B6	(5B62) Gouge Bkn Core. MIL/ATT int 11S2 F.
L	8343	8970		56	5AO	(5A* DOL)
L	8970	8994		57	4G4	BARITE. - (4E4)
L	8994	9325		58	5B6	Gouge ZnS 922.6-924.5 UC ind. L.c. 50/180; 931-931.6. UC ind. L.c 11S2
L	9325	9340		59	4LO	
L	9340	9356		60	5D4*	NO fusch.
L	9356	9363		61	5B6	
L	9363	9410		62	5B6	GOUGE v.g.c 11S2 good. 230 SLICKS THRUST.
L	9410	9426		63	4AO	BRECCIA A Gouge 941.0-.3 mil wtl.
L	9426	9506		64	5D*	DOL
L	9506	9587		65	5D4*	ANK no fusch (5B64)
L	9587	9685		66	4A4	
L	9685	9785		67	4LO	
L	9785	10085		68	5B62	
L	10085	10246		69	4LO	(4LO BIOT)
L	10246	10280		70	4D*	ANK
L	10280	10305		71	4L42	/8/7
L	10305	10520		72	4LO	(4L2/7)

DDH FAGA082 (2 8)

Cyprus Anvil Mining Corp.

Lithologic Log

Date: 21SEP81 Logged By: DSJ - JGS.

Code	From	To	Recov.	No.	Unit	Description
1	10 14	16 20	22 24	26 28	30 34	35
L	10520	10570		73	4E46	MO CORE KA LOG.
L	10570	10575		74	4L0	
L	10575	10680		75	5A9	(5B 6/2/4) (4A0) minor
L	10680	10735		76	4L07	
L	10735	10785		77	4E48	K.A LOG
L	10785	10835		78	4D0	KA. LOG
L	10835	10960		79	4E81	/7 CHALCO
L	10960	11193		80	4C78	NB ASSAY +4% To 110J.5' ↓
L	11193	11335		81	4C0	PHYLL. 30% Sulph. [4L3/4/1] Chalco.
L	11335	11950		82	4L0	(4L2)
						END of HOLE.

DDH EAGA082 (2 … 8) FEET.

Cyprus Anvil Mining Corp.

Structural Log

Date: 21SEP81 Logged By: DSJ - JGS

Code	From	To	Feature	Sym	S_0 Dip Direct.	S_1 Dip Direct.	S_2 Dip Direct	Description
1	10 14	16 20	22 24	26	28 32	34 38	40 44	
S		1480	PS12				70 2310	
S		1860	CS12	Z			810 2310	
S		11130	CS12	S			75 2310	
S		11230	CS12	S			75 2310	
S		11375	CS12	D		25 2310	810 2310	
S		11570	CS12	S		30 2310	710 2310	
S		11910	CS12	S		310 2310	715 2310	
S		12270	PS12				810 2310	
S		12540	CS12	Z			75 2310	
S		12815	CS12	S		410 2310	810 2310	
S		13165	CS12	S		510 2310	615 2310	
S		13240	CS12	S		415 2310	710 2310	
S		13530	CS12	Z		2310	710 2310	
S		13710	CS12	D			810 2310	
S		14120	CS12	Z		810 0510	810 2310	
S		14260	CS12	S		35 2310	810 2310	
S		14550		R			810 2310	
S		14780	CS12	S		110 2310	710 2310	
S		15170	CS12	Z		510 0510	810 2310	
S		15360	CS12	Z		515 0510	710 2310	
S		15680	CS12	Z		310 0510	715 2310	
S		15815	CS12	S		115 2310	810 2310	
S		16155	CS12	Z		610 0510	710 2310	
S		16290	CS12	S			810 2310	
S		16585	CS12	3			815 2310	
S		16865	CS12	Z		510 0510	810 2310	
S		16965	CS12	S			810 2310	LARGE M. } 650 – 705
S		17320	CS12	Z		350 0510	710 2310	REGION. }
S		17505	CS12	D			810 2310	
S		17710	CS12	D			615 2310	
S		17930	CS12	Z		610 0510	710 2310	
S		18030	CS12	Z		110 0510	715 2310	
S		18240	CS12	Z		550 0510	715 2310	
S		18450	CS12	Z		1100 0510	715 2310	
S		18600	CS12	H			2	SX 15°
S		18785	CS12	Z			810 2310	

DDH FAGA082 (2 8) FEET — Cyprus Anvil Mining Corp. — Page 7 of 8

Structural Log — Date: 21SEP81 — Logged By: DBS - JGS

Code	From	To	Feature	Sym	S_0 Dip Direct.	S_1 Dip Direct.	S_2 Dip Direct	Description
1	10 14	16 20	22 24	26	28 32	34 38	40 44	
S		18890	CS12	E			810 2310	
S		19075	CS12	S		20 2310	710 2310	→ RUNS TO Z
S		19180	CS12	S		20 2310	60 2310	
S		19505	CS12	3			55 2310	
S		19765	CS12	Z		55 0510	710 2310	
S		19860	CS12	Z		65 0510	55 2310	
S		19985	CS12	Z		75 0510	715 2310	
S		20140	CS12	Z		60 0510	710 2310	
S		20365	CS12	Z		70 0510	710 2310	
S		20680	CS12	Z		40 0510	810 2310	NB 1060 abo Z.
S		20855		R			865 2310	
S		21070		R			815 2310	
S		21260		R			910 2310	
S		21440	CS12	Z		50 0510	555 2310	
S		21580	CS12	Z		25 0510	715 2310	
S		21740	CS12	3			910 2310	
S		21940	CS12	D			810 2310	

NB No CORE.

FEET

TRANSFER ASSAYS FROM K/A LOG.

DDH FAGA082 (2 8) Cyprus Anvil Mining Corp

Logged by DSJ + JGS

ASSAY LOG (SAMPLER'S COPY) Date 21 SEP 81 Sampled by

CODE	FROM	TO	SAMPLE	INTR.	REC (m)	UNIT	DESCRIPTION
1	10 14	16 20	22 26	28 30	32 34	36 40	42
P	13200	13225	120220	25	25	407	NB ALL K/A ASSAYS.
P	13354	13410	120221	56	56	4D0	4C0 see assays
P	13410	13450	120222	40	40	4D0	
P	13895	13960	120223	65	60	4E4	
P	13995	14050	120224	55	55	4D0	
P	14050	14098	120225	48	48	4D0	
P	14498	14558	120226	60	60	4E4	(4A4)
P	18970	18994	120227	24	24		
P	19587	19637	120228	50	50		
P	19637	19685	120229	48	48		
P	10520	10570	120230	50	50		
P	10735	10785	120231	50	50		
P	10785	10835	120232	50	50		
P	10835	10885	120233	50	50		
P	10885	10935	120234	50	50		

FEET

FAUAT

DDH FAGA082 (2 8)

Cyprus Anvil Mining Corp.

Structural Log

Page _____ of _____

Date: 3 OCT/83 Logged By: _____

Code	From	To	Feature	Sym	S_0 Dip Direct.	S_1 Dip Direct.	S_2 Dip Direct	Description
1	10 14	16 20	22 24	26	28 32	34 38	40 44	
F	13190	17100	NNN	5				50% core loot — spilt box?
F	21151	21157	G				9999	Gouge, upper cnt. IND,
								lower cnt. 11 S_2
F	21160	21210	P	1				12% recovry — no reason given
F	21704	21725	G				9999	Upper cnt IND, lower cnt 11 S_2
F	31042	31049	G					IND gouge
F	31300	31350	BG					bkn core & gouge IND
F		31416	G			9999		gouge 11 S_2
F	31474	31480	G					IND
F	31670	31697	G			9999		11 S_2
F	31820	31840	G		9999			upp 11 S_2, lower cntact IND
F	31895	31960	NNN					No core — KA sample
F	31997	41015	B	5				55% recovry
F	41019	41100	G					IND
F	41370	41498	G	3		9999		38% recovry, 11 S_2
F	41498	41520	X					bxa, noncalc. phyll
								& 4A4 clasts
F	51270	51305	Q					1090
F	51535	51580	Q					1090
F	51655	51661	Q					1090
F	51917	60946	Q					1090
F	71954	71970	Q					1090
F		81256	G			9999		gouge 11 S_2
F	81290	81343	GB			9999		gouge, brkcon core, internal 11 S_2
								upper & lower IND
F	91216	91243	G				5101810	upper cntact IND
F	91310	91316	G				9999	upper cntact IND,
								lower 11 S_2
F	91363	91410	G		9999		9999	230 slides
F	91410	91426	X					bxa
F	91410	91413	G					IND
F	101520	101570	NNN					No core - KA sample
	101735	101835	NNN					No core - KA sample

DIAMOND DRILL RECORD

LOGGED BY S. B. Reamsbottom

PROPERTY VANGORDA, GRUM JOINT VENTURE

D.D.H. No. 75-A82 PAGE 1 of 10

HIW Coords / LINE GRID

LATITUDE 10,961.25'N — 8 + 15 N (approx.)

DEPARTURE 76 06.81'E — 78 W

ELEVATION 1312.30' — 4263' (approx.)

BEARING OF HOLE BY TROPARI: 202' -- 148° 50' True; 402' -- 146° 20'; 602' -- 147° 50'; 782' -- 132° 50'; 962' -- 118° 50'; 1182' -- 119° 50'

DIP OF HOLE

DIP TESTS BY TROPARI: 202' -- -85°; 402' -- -79°; 602' -- -76°; 962' -- -78°; 782' -- -77°; 1182' -- -77°

STARTED June 5, 1975 A.S.

COMPLETED June 12, 1975 D.S.

DEPTH Proposed: 1185-1255'; Ultimate: 1195' (364.24 metres)

0 - 47 Tricone 37/8"

47 - 1195 BQ

CLAIM No.

DIRECTION AND DISTANCE FROM NE. CLAIM POST

FOOTAGE FROM	FOOTAGE TO	DESCRIPTION	Rec. Ft.	Sample No.	Sample Footage From	Sample Footage To	Sample Length	Assay Pb	Assay Zn	Assay Ag	Assay Au	Assay Cu	Assay x Feet Pb	Assay x Feet Zn	Assay x Feet Ag
0	39	OVERBURDEN													
39	100	GRAY-GREEN, SERICITE - CHLORITE - QUARTZ - PHYLLITE Thinly laminated. Quite limey. Quartz-chlorite veins. Sericite locally buff colour. Core Angle: 40' = 60°, 50' = 52°, 60' = 72°, 70' = 76°, 80' = 60°, 90' = 82°, F2 folds F1 subvertical, 100' = 57°	2/10		39 Good Recovery	49									
100	140	GRADES TO GREEN, CHLORITE - SERICITE - QUARTZ PHYLLITE Which is also limey. Striped with white quartz-carbonate laminae (1-3 mm) F2 folds, F1 subvertical to F2. Core Angle: 110' = 76°, 120' = 70°, 130' = 75°, 140' = 74°.	1.5/4		99	103									
140	171	MEDIUM GRAY, QUARTZ - SERICITE PHYLLITE Thinly laminated, good F2 folds, some F3 kinks. Note clasts of black graphite-quartz phyllite at 169'. Rock slightly broken. Core Angle: 150' = 75°, 160' = 81°, F1 subvertical, 170' = 65°			Good Recovery										

DIAMOND DRILL RECORD

LOGGED BY S. B. Reamsbottom

PROPERTY

LATITUDE BEARING OF HOLE STARTED

DEPARTURE DIP OF HOLE COMPLETED

ELEVATION DIP TESTS DEPTH Proposed: Ultimate:

D.D.H. No. 75-A82 PAGE 2 of 10

CLAIM No.

NN

DIRECTION AND DISTANCE FROM NE. CLAIM POST

FOOTAGE FROM	FOOTAGE TO	DESCRIPTION	Rec. Ft.	Sample No.	Footage From	Footage To	Sample Length	Assay Pb	Assay Zn	Assay Ag	Assay Au	Assay Cu	Assay x Feet Pb	Assay x Feet Zn	Assay x Feet Ag
171	245	GREEN, CHLORITE - SERICITE - QUARTZ - CARBONATE PHYLLITE													
		With thinner zones of GRAY, QUARTZ - SERICITE PHYLLITE These 1-3' thick. F2 fold noses, later F3 kinks. Competent	2.5/7		214	221									
		rock. Chlorite-quartz veins.	2.5/7		232	239									
		Core Angle: 180' = 70°, 190' = 75°, 200' = 71°, 210' = 81°, 220' = 75°, 230' = 81°, 240' = 75°.													
245	312	GRADES TO GRAY-GREEN, SERICITE - CHLORITE - QUARTZ - PHYLLITE													
		Less carbonate then above. F2 dominant. F1 subvertical. Local small-scale F2 folds. Rock becomes grayer, less chlorite rich from			Good Recovery.										
		290' onward. Thin buff carbonate (?) in laminae.													
		Core Angle: 250' = 62°, 260' = 70°, 270' = 80°, 280' = 67°, 290' = 55°, 300' = 67°, 310' = 47°.													
312	320	BLACK, STRIPED, QUARTZ - GRAPHITIC PHYLLITE													
		Minor sphalerite in laminae 313.5'. Banded pyrrhotite, sphalerite, galena (massive)	0.8/2.5		312.0	312.8 / 315.3		2.7	Pb Zn,	Est.					
		Core Angle: 320' = 76°.	4.7			320.0		0.2	" "	"					
320	322.5	MINERALIZED, QUARTZ RICH-SERICITE PHYLLITE													
		Quite quartzitic. Laminae with red sphalerite, pyrite, pyrrhotite, lesser galena and chalcopyrite in tenseion gashes. 10% sulphides, 8% lead-zinc. No. 2019	2.5	2019	320	322.5	2.5	2.78	5.04	.59					

DIAMOND DRILL RECORD

LOGGED BY S. B. Reamsbottom

PROPERTY

LATITUDE | BEARING OF HOLE | STARTED

DEPARTURE | DIP OF HOLE | COMPLETED

ELEVATION | DIP TESTS | DEPTH Proposed: Ultimate:

D.D.H. No. 75-A82 PAGE 3 of 10

CLAIM No.

N

DIRECTION AND DISTANCE FROM NE. CLAIM POST

FOOTAGE FROM	FOOTAGE TO	DESCRIPTION	Rec. Ft.	Sample No.	Footage From	Footage To	Sample Length	Assay Pb	Assay Zn	Assay Ag	Assay Au	Assay Cu	Assay x Feet Pb	Assay x Feet Zn	Assay x Feet Ag
322.5	335.4	BLEACHED, PALE WHITE-GREEN, QUARTZ - SERICITE - CHLORITE PHYLLITE Minor carbonate. First 2' of blacker graphite phyllite. Brighter green mariposite locally.	/12.9		322.5	335.4									
		Core Angle: 330' = 57°.													
335.4	345	SULPHIDE ZONE, IN QUARTZ-RICH SERICITE PHYLLITE													
		Fine-grained pyrite, red sphalerite, galena, minor chalcopyrite.	5.6	2020	335.4	341	5.6	1.80	3.06	.83			10.08	17.136	4.648
		No. 2020 -- quartz rich sericite phyllite, fine-grained pyrite, sphalerite, galena, chalcopyrite, 15-20% sulphide, 8% lead-zinc	4	2021	341	345	4.0	1.98	3.42	.83			7.92	13.68	3.32
		No. 2021 -- as above, 15-20% sulphide, 8% lead-zinc.		Wt. Av	335.4	345.0	9.6	1.88	3.21	0.83	(28.5)		18.00	30.816	7.968
		Core Angle: 340' = 65°.													
345	389.5	BLACK, QUARTZ - GRAPHITIC PHYLLITE	/30		345.0	375.0	—								
		Mariposite zone for 1' beyond sulphide. Network buff-quartz-carbonate veins. Many F3 kinks.	5	2022	375	380	5.0	1.63	3.60	.97					
		Core Angle: 350' = 82°, 360' = 62°.	/9.5			389.5	—								
		Mineralized -- 375-380'.													
		Fine-grained sphalerite, pyrite, galena in F1 laminae, locally folded in F2 fold nose. Well defined F2 axial plane.		Good Recovery.											
		5-10% sulphide, 1-3% lead-zinc. N.B. Last 1.5' soft, gougy, mariposite, sericite phyllite, possibly shear zone before massive sulphide.													
		Core Angle: 370' = 76°, 380' = 63°.													

DIAMOND DRILL RECORD

LOGGED BY S. B. Reamsbottom

PROPERTY

LATITUDE BEARING OF HOLE STARTED

DEPARTURE DIP OF HOLE COMPLETED

ELEVATION DIP TESTS DEPTH Proposed: Ultimate:

D.D.H. No. 75-A82 PAGE 4 of 10

CLAIM No.

N

DIRECTION AND DISTANCE FROM NE. CLAIM POST

FOOTAGE FROM	FOOTAGE TO	DESCRIPTION	Rec. Ft.	Sample No.	Footage From	Footage To	Sample Length	Assay Pb	Assay Zn	Assay Ag	Assay Au	Assay Cu	Assay x Feet Pb	Assay x Feet Zn	Assay x Feet Ag
389.5	409.9	SULPHIDE ZONE													
		Bands of massive sphalerite rich sulphide; mineralized quartz-graphitic phyllite with partings of lustreous gray phyllite.	6	2023	389.5	396	6.5	6.15	10.37	2.68			39.975	67.405	17.42
		Grade varies 25-30% to 8-10%. No. 2023 -- M.S. 90% sulphide, 25-30% lead-zinc	/3.5		396	399.5		Weak mineralized phyllite, 0.5% lead-zinc est. (0.2)	(0.3)	(0.2) ← USE			0.7	1.05	0.7
		No. 2024 -- Bands of sulphide in phyllite: 20% sulphide, 6-8% lead-zinc	5.5	2024	399.5	405	5.5	2.08	3.30	1.29			11.44	18.15	7.085
		No. 2025 -- as above, 20% sulphide, 6-8% lead-zinc N.B. Phyllite partings in sulphide zone, soft, incompetent.	4.8	2025	405	409.8	4.8	2.05	3.12	1.29			9.84	14.976	6.192
		409.8-410' -- muddy gouge.													
		Core Angle: 400' = 56°.		Wt. Av. Wt. Av.	389.5 399.5	399.5 409.8	10.0 10.3	4.06 2.07	6.85 3.22	1.81 1.29	(62.) (44.2)		40.625 21.28	68.455 33.126	18.12 13.287
409.9	449.8	GRAY, QUARTZ - SERICITE PHYLLITE	/32.2		409.8	442.0									
		Minor graphite. Good F2 foliation.	0.5/6		442	448		Rock muddy, gouged.							
		Core Angle: 410' = 71°, 420' = 86°, 430' = 75°, F1 subvertical, 440' = 73°, (F3 fold ?)			448	449.8		Rock muddy, gouged.							
449.8	455.8	SULPHIDE BRECCIA (to 452')													
		Followed by mineralized quartz-graphite and sericite phyllites. Matrix of breccia mainly fine-grained pyrite. Phyllites, sphalerite rich. 30% sulphide, 8-10% lead-zinc.	6	2026	449.8	455.8	6.0	3.30	6.45	1.21					
		Core Angle: 450' = breccia sulphide, 453' = 62°.													

DIAMOND DRILL RECORD

LOGGED BY S. B. Reamsbottom

PROPERTY _____

LATITUDE _____ BEARING OF HOLE _____ STARTED _____

DEPARTURE _____ DIP OF HOLE _____ COMPLETED _____

ELEVATION _____ DIP TESTS _____ DEPTH Proposed: Ultimate: _____

D.D.H. No. 75-A82 PAGE 5 of 10

CLAIM No. _____

N

DIRECTION AND DISTANCE FROM NE. CLAIM POST

FOOTAGE FROM	FOOTAGE TO	DESCRIPTION	Rec. Ft.	Sample No.	Footage From	Footage To	Sample Length	Assay Pb	Assay Zn	Assay Ag	Assay Au	Assay Cu	Assay x Feet Pb	Assay x Feet Zn	Assay x Feet Ag
455.8	520	BLACK, QUARTZ - GRAPHITIC PHYLLITE Rock broken, incompetent -- 455-501'. Quartz veins. Thin bleached sericite phyllite at sulphide contact. Weakly mineralized for 2 feet past sulphide. F2 folds well defined by quartz-feldspar laminae. N.B. Red sphalerite -- 515-520' in F2 foliation. Core Angle: 460' = 66°, 470' = 69°, 480' = 60°, 490' = 72°, F2 folds, 500' = 56°, 510' = 71°, 520' = 63°.	51.2		455.8 515	501 520	55.2	Weakly mineralized 0.3% zinc							
520	638.2	GRAY, SERICITE - QUARTZ - PHYLLITE Excellent F2 foliation. Local F3 kinks. Very micaceous. Quartz veins (3-4') @ 528' and 555'. Minor blebs of pyrite, pyrrhotite. Thick quartz veins -- 592'-604'. Broken quartz. Core Angle: 530' = 76°, 540' = 85°, 550' = 63°, 560' = 76°, 570' = 80°, 580' = 79°, 590' = 66°, 600' = quartz vein, 610' = 73°, 620' = 80°, 630' = 70°, 640' = 80°.		Good Recovery.											
638.2	742.3	BLACK, STRIPED, QUARTZ - GRAPHITE PHYLLITE Excellent F2 folds, good F2 foliation. Blebs of pyrite throughout. Core Angle: 650' = 74°, 660' = 70°, 670' =		Good Recovery.											

DIAMOND DRILL RECORD

LOGGED BY S. B. Reamsbottom

PROPERTY _____

LATITUDE _____ BEARING OF HOLE _____ STARTED _____

DEPARTURE _____ DIP OF HOLE _____ COMPLETED _____

ELEVATION _____ DIP TESTS _____ DEPTH Proposed: Ultimate: _____

D.D.H. No. 75-A82 PAGE 6 of 10

CLAIM No. _____

N

DIRECTION AND DISTANCE FROM NE. CLAIM POST

FOOTAGE FROM	FOOTAGE TO	DESCRIPTION	Rec. Ft.	Sample No.	Footage From	Footage To	Sample Length	Assay Pb	Assay Zn	Assay Ag	Assay Au	Assay Cu	Assay x Feet Pb	Assay x Feet Zn	Assay x Feet Ag
		Note, pale green partings (1') of sericite-chlorite phyllite locally. Many F2 fold noses between F2 axal planes. Note, band of c.g. red sphalerite in quartz vein @ 742'.		Good Recovery.											
		Core Angle: 670' = 81°, 680' = 76°, 690' = 64°, 700' = F2 fold nose 75°, 710' = 64°, 720' = 72°, 730' = 70°, 740' = 80°.													
742.3	830	GRAY, QUARTZ - SERICITE PHYLLITE													
		Thinly laminated, excellent F2 foliation. Locally chlorite rich. Very phyllitic. Blebs of pyrite, pyrrhotite throughout.		Good Recovery.											
		Core Angle: 750' = 73°, F1 subvertical, 760' = 76°, 770' = 67°, 780' = 75°, 790' = 74°, 800' = 80°, 810' = 63°, 820' = 72°, 830' = 78°.													
830	897	BLACK STRIPED QUARTZ - GRAPHITIC PHYLLITE													
		Good F2 foliation, local F3 kinks. Tension fractures perpendicular to foliation. Rock broken 830-855'. Blebs of pyrite.	20/24		830	854									
		Core Angle: 840' = 85°, 850' = 72°, 860' = 85°, 870' = 78°, 880' = 85°, 890' = 72°.													
897	899.4	BANDED MASSIVE SULPHIDE WITH BARITE													
		60-70% sulphide; barite, pyrite, sphalerite, galena, 10-15% lead-zinc. Core Angle: 898' = 63°.	2.4	2027	897	899.4	2.4	4.72	9.40	2.65					

DIAMOND DRILL RECORD

LOGGED BY S. B. Reamsbottom

PROPERTY

LATITUDE BEARING OF HOLE STARTED

DEPARTURE DIP OF HOLE COMPLETED

ELEVATION DIP TESTS DEPTH Proposed: Ultimate:

D.D.H. No. 75-A82 PAGE 7 of 10

CLAIM No.

N

DIRECTION AND DISTANCE FROM NE. CLAIM POST

FOOTAGE FROM	FOOTAGE TO	DESCRIPTION	Rec. Ft.	Sample No.	Footage From	Footage To	Sample Length	Assay Pb	Assay Zn	Assay Ag	Assay Au	Assay Cu	Assay x Feet Pb	Assay x Feet Zn	Assay x Feet Ag
899.4	933	GRAY, QUARTZ - SERICITE PHYLLITE Stringers of buff carbonate, minor pyrite. Rock broken, muddy @ 920-925'. Core Angle: 900' = 70°, 910' = 70°, 920' = 64°, 930' = 74°.													
933	958.7	ZONE OF MUDDY, GOUGED, QUARTZ - SERICITE, GRAY AND GREEN PHYLLITES Bleached, altered. Mud @ 936-941'. Brecciated phyllite @ 941-941.5'. Bleached, pale green chlorite-sericite phyllite @ 941.5-951'. Core Angle: 940' = 63°, broken gouged, 950' = 56°.													
958.7	968.5	BANDS OF MASSIVE PYRITIC SULPHIDE IN MINERALIZED QUARTZ - GRAPHITIC PHYLLITE AND QUARTZ - SERICITE PHYLLITE Late white cc veins. Sulphide: massive to 20% in phyllite; pyrite, galena, minor chalcopyrite. Grade 6-12%. No. 2028 -- 40-50% sulphide, 10-11% lead-zinc No. 2029 -- 20% sulphide, 6-8% lead-zinc Core Angle: 960' = 83°.	5	2028	958.7	963.7	5.0	3.53	4.44	1.59			17.65	22.20	7.85
			4.8	2029	963.7	968.5	4.8	2.23	4.44	.97			10.70	21.31	4.66
				Wt. Av	958.7	968.5	9.8	2.89	4.44	1.29	(44.1)		28.35	43.51	12.61
968.5	980	BLEACHED WHITE, QUARTZ - SERICITE PHYLLITE Bands, layers of pyrite, pyrrhotite with minor sphalerite @ 976-979'. Minor chlorite. Core Angle: 970' = 70°, 980' = 80°.	7.5		968.5	976									
			3.0		976	979		Mineralized phyllite				< than 1% lead-zinc (Trace)			

DIAMOND DRILL RECORD

LOGGED BY S. B. Reamsbottom

PROPERTY

LATITUDE BEARING OF HOLE STARTED

DEPARTURE DIP OF HOLE COMPLETED

ELEVATION DIP TESTS DEPTH Proposed: Ultimate:

D.D.H. No. 75-A82 PAGE 8 of 10

CLAIM No.

N

DIRECTION AND DISTANCE FROM NE. CLAIM POST

FOOTAGE FROM	FOOTAGE TO	DESCRIPTION	Rec. Ft.	Sample No.	Footage From	Footage To	Sample Length	Assay Pb	Assay Zn	Assay Ag	Assay Au	Assay Cu	Assay x Feet Pb	Assay x Feet Zn	Assay x Feet Ag
980	1023	GRAY, SERICITE - QUARTZ PHYLLITE Excellent F2 foliation, phyllitic. Note incoming biotite @ 1012'. Core Angle: 990' = 80°, 1000' = 92°, 1010' = 80°, 1020' = 91°.													
1023	1052	WEAKLY MINERALIZED, WHITE BLEACHED, QUARTZ - SERICITE PHYLLITE Bands (0.5') and concentrations in F1 layers of pyrite-pyrrhotite, minor sphalerite, galena, magnetite. No. 2030 -- highest grade section in phyllite, 8-10% sulphide, 3% lead-zinc. Core Angle: 1030' = 75°, 1040' = 69°, 1050' = 73°.	7 /17	2030	1028	1035 1052	7	.90	.94	.29					
1052	1057	MASSIVE SULPHIDE 70% sulphide, 10-15% lead-zinc. Pyrite, orange sphalerite, galena, 5. barite rich.		2031	1052	1057	5	4.92	6.35	2.12					
1057	1073.5	MAINLY GRAY, QUARTZ - SERICITE PHYLLITE Thinner zones of mineralized black quartz-graphite phyllite. Last 2' of section bleached quartz-sericite phyllite. Core Angle: 1060' = 70°, 1070' = 75°.	/3.0 /2.0 /11.5		1057 1060	1060 1062 1073.5		Weak mineralized graphite phyllite less than 1% lead-zinc (TRACE)							

DIAMOND DRILL RECORD

LOGGED BY S. B. Reamsbottom

PROPERTY

LATITUDE BEARING OF HOLE STARTED

DEPARTURE DIP OF HOLE COMPLETED

ELEVATION DIP TESTS DEPTH Proposed: Ultimate:

D.D.H. No. 75-A82 PAGE 9 of 10

CLAIM No.

DIRECTION AND DISTANCE FROM NE. CLAIM POST

FOOTAGE FROM	FOOTAGE TO	DESCRIPTION	Rec. Ft.	Sample No.	Footage From	Footage To	Sample Length	Assay Pb	Assay Zn	Assay Ag	Assay Au	Assay Cu	Assay x Feet Pb	Assay x Feet Zn	Assay x Feet Ag
1073.5	1104	BANDED, SULPHIDE IN QUARTZ - (MINOR C.G.) BARITE GANGUE	5	2032	1073.5	1078.5	5	4.28	3.18	1.32					
		70% sulphide Layers of pyrite, magnetite, pyrrhotite, lesser sphalerite,	5	2033	1078.5	1083.5	5	3.98	1.34	1.18					
		galena, chalcopyrite, grade 8-10%.	5	2034	1083.5	1088.5	5	1.38	1.86	.47					
		No. 2032 -- banded sulphide 60-70%: pyrite, magnetite, pyrrhotite sphalerite, galena. Note quite magnetic. Quartz gangue with lesser c.g. barite crystals. 6-8% lead-zinc.	5	2035	1088.5	1093.5	5	1.34	1.56	.56					
		No. 2033 -- No. 2037 -- as above	5	2036		1098.5	5	2.20	3.78	0.68					
			5	2037		1103.5	5	1.45	2.73	0.53					
		Core Angle: 1080' = 69°, 1090' = 71°, 1100' = 72°.	5	2038		1108.5	5	0.49	0.89	0.21					
			5	2039		1113.5	5	0.54	0.88	0.26					
1104	1133.5	GRADESTO SULPHIDE WITHIN WHITE QUARTZ - SERICITE PHYLLITE GANGUE													
		Note pink garnets, also. Phyllite locally boudinaged -- minor chalcopyrite in fractures and boudin necks. 30-60% sulphide:	5	2040		1118.5	5	0.48	0.54	0.29					
		pyrite, magnetite, pyrrhotie, sphalerite, galena, minor chalco-	5	2041		1123.5	5	0.38	0.35	0.26					
		pyrite. Grade varies 3-6%.	5	2042		1128.5	5	0.27	0.47	0.21					
		No. 2038 -- layered sulphide in quartz-sericite-graphite phyllite gangue. 40-60% sulphide, 1-3% magnetite, 5-6% lead-zinc.	5	2043		1133.5	5	0.35	0.29	0.29					
		No. 2039 - No. 2043 -- as above. Grade 4-5% last 3 samples.		Wt. Av.	1073.5	1083.5	10.0	4.43	2.26	1.25	(42.9)				
				Wt. Av.		1093.5	10.0	1.36	1.71	0.52	(17.7)				
		Core Angle: 1110' = 45°, 1120' = 76°, 1130' = 70-80°, 1140' = 53°.		Wt. Av.		1103.5	10.0	1.83	3.26	0.61	(30.7)				
				Wt. Av.		1113.5	10.0	0.52	0.89	0.24	(8.1)				
1133.5	1195	WHITE, POSSIBLY BLEACHED, QUARTZ - SERICITE PHYLLITE --		Wt. Av.		1133.5	20.0	0.8	Pb Zn						
		WEAKLY MINERALIZED			1138	1138.5	0.5	MS pyrrhotite, sphalerite 8% lead-zinc							
		Bands and stringers of pyrite mainly in F2 foliation. Note band of massive sulphide (0.5') at 1138'. Minor chlorite in phyllite. F2 dominant.													

DIAMOND DRILL RECORD

LOGGED BY S. B. Reamsbottom

PROPERTY

LATITUDE BEARING OF HOLE STARTED

DEPARTURE DIP OF HOLE COMPLETED

ELEVATION DIP TESTS DEPTH Proposed: Ultimate:

D.D.H. No. 75-A82 PAGE 10 of 10

CLAIM No.

N

DIRECTION AND DISTANCE FROM NE. CLAIM POST

FOOTAGE FROM	FOOTAGE TO	DESCRIPTION	Rec. Ft.	Sample No.	Footage From	Footage To	Sample Length	Assay Pb	Assay Zn	Assay Ag	Assay Au	Assay Cu	Assay x Feet Pb	Assay x Feet Zn	Assay x Feet Ag
		Core Angle: 1150' = 65°, 1160' = 70°, 1170' = 72°, 1180' = 79°, 1190' = 75°.													
	1195	END OF HOLE													
		REMARKS: 1. Hole cemented from bottom upwards, using 30 bags of cement.													

DDH: FAGA082 -- 42 DEGREE PROFILE

(VIEW AZIMUTH = 312 DEGREES)

ELEV:1302 592295E ; 905168N

PLUNGE ANGLE IS 11.0 TREND ANGLE IS 312.0

CORRECTED COLLAR POSITION: X = 622.5 Z = 1301.8

SECTION NAME: 78W

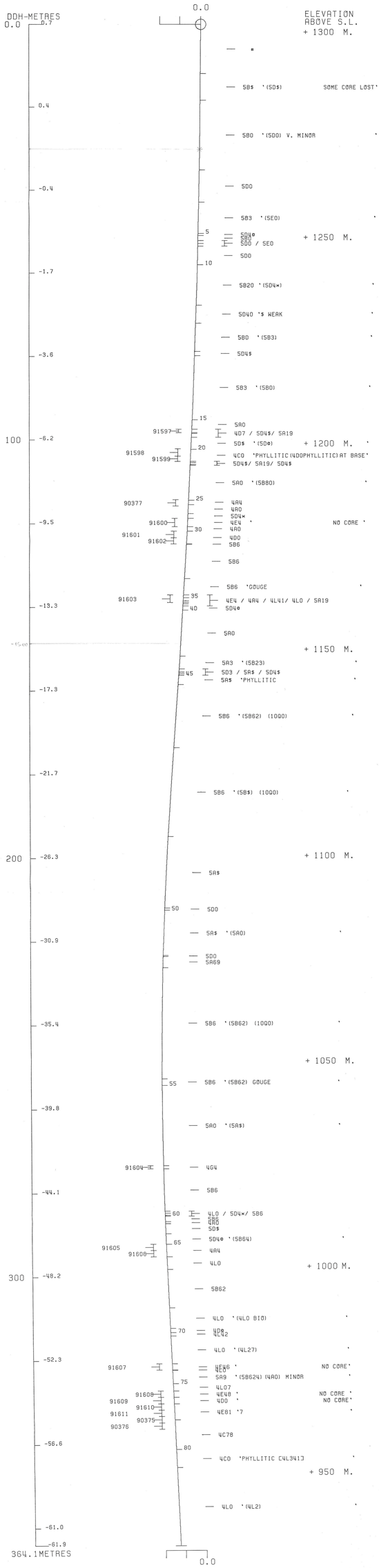

CYPRUS ANVIL MINING CORPORATION
PROGRAM DH162 11 DEC 1984 10:14 AM

DDH: FAGA082 -- 42 DEGREE PROFILE

(VIEW AZIMUTH = 312 DEGREES)

ELEV:1302 592295E ; 905168N

PLUNGE ANGLE IS 11.0 TREND ANGLE IS 312.0

CORRECTED COLLAR POSITION: X = 622.5 Z = 1301.8

SECTION NAME: 78W

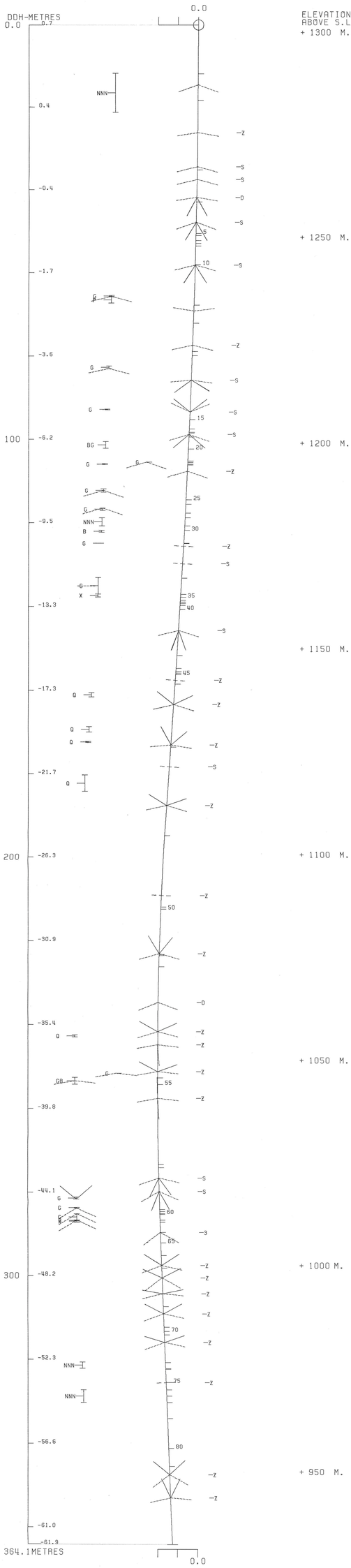

CYPRUS ANVIL MINING CORPORATION
PROGRAM DH161 11 DEC 1984 3:49 PM

FAGA084

DRILL HOLE : FAGA084

NORTHING : 904,984.3

EASTING : 592,128.6

ELEVATION : 1,297.3

TOTAL DEPTH : 456.6

SECTION : W 78

R.F.E. : S2

RFE DIRECTION: 230

PLUNGE ANGLE : 11

PLUNGE DIRECT: 312

DHD CALC: 1

SS CALC: 1

DETAIL RECORD COUNTS:

NOS ORE-SAMPLES:	30
NOS DOWN-H-SURVEYS:	7
NOS DOWN-H-LITHOLOGY:	140
NOS DOWN-H-STRUCTURE:	74
NOS DOWN-H-FAULTS:	35
NOS DOWN-H-SPLINES:	7
NOS COMPOSITES:	0

DDH: FAGA084 UTM-N: 904,984.3 UTM-E: 592,128.6 UTM-ELEV: 1,297.3 TOTAL DEPTH: 456.6 SECTION: W 78
RFE: S2 RFE DIR: 230 PLUNGE ANGLES: 11 312 DHD CALC: 1 SS CALC: 1

DEPTHS FROM	DEPTHS TO	SAMPLE NO.	INT.	REC.	ROCK UNIT	ASSAYS S.G. PULP	CU %	PB %	ZN %	AG(AA) G/MT	AG(FA) G/MT	AU(FA) G/MT	PO %	PY %	TOT FE	BAO %	HG %	MN %	AS %	BA %	S.G. W.R.
148.7	149.2	11701	.5	.5	4E8		.23	1.19	.85	27.00											
151.2	152.4	11702	1.2	1.1	4E$	3.37	.19	.97	1.02	25.00		.47	9	11	21						
152.4	153.2	11703	.8	.7	4E1#	3.47	.28	1.53	1.67	40.00		.34	6	15	22						
153.2	153.5	11704	.3	.2	4E4	3.64	.05	6.90	8.19	72.00		.27	3	14	18						
200.4	201.1	11705	.7	.5	4E1		.08	.34	.40	13.00											
215.5	215.6	11706	.1	.1	4A0		.04	.42	2.70	13.99											
215.6	216.7	90367	1.1	.0	4L14			3.08	4.86	45.29											
216.7	219.2	90368	2.5	.0	4G4			5.62	8.88	91.90											
219.2	220.5	11709	1.3	1.3	4A0		.02	.39	.72	9.00											
253.4	254.6	90369	1.2	.0	5B49			1.30	1.84	20.19											
254.6	255.8	90370	1.2	.0	4E47			4.92	5.09	54.50											
255.8	256.2	11712	.4	.3	4C75		.14	1.66	2.70	37.00											
256.2	257.9	11713	1.7	1.7	4A13		.13	.14	.22	6.99											
257.9	258.3	11714	.4	.4	4E1		.11	1.12	1.25	27.00											
258.3	258.8	11715	.5	.5	4G0		.14	1.37	1.37	26.00											
258.8	259.1	11716	.3	.3	4E17		.10	.81	.65	24.00											
277.8	277.9	11717	.1	.1	4E17	3.77	.08	1.79	2.20	43.00		.07	13	18	32						
277.9	278.6	11718	.7	.7	4L0	3.35	.08	1.11	1.05	24.00		.20	6	13	19						
278.6	279.8	11719	1.2	1.2	4K81	3.77	.10	1.20	1.26	27.00		.55	5	23	29						
279.8	280.1	11720	.3	.3	4K1		.10	.27	.11	17.00											
280.1	280.6	11721	.5	.4	4A1		.08	.20	.10	6.99											
280.6	281.0	11722	.4	.4	4K1		.10	.51	.35	18.00											
282.7	283.6	11723	.9	.8	4E1		.01	.07	.31	6.00											
283.6	284.4	11724	.8	.6	4A0		.05	.08	.46	3.99											
284.4	286.7	11725	2.3	2.3	4K1		.11	.22	.19	13.00											
286.7	287.7	11726	1.0	.9	4A1		.05	.66	1.24	14.99											
314.1	316.0	11727	1.9	1.8	4A31		.16	.07	.27	6.99											
318.5	318.8	11728	.3	.2	4G8	3.95	.13	3.20	2.70	42.00		.89	7	20	28						
318.8	319.1	11729	.3	.2	4L12	3.62	.16	2.70	1.59	40.00		.27	13	12	25						
319.1	319.3	11730	.2	.2	4C0	3.39	.13	2.70	1.86	39.00		.27	10	9	20						
WEIGHTED AVERAGE																					
148.7	149.2		.5	.5			.23	1.19	.85	27.00											
151.2	153.5		2.3	2.0		3.44	.20	1.94	2.18	36.34		.40	7	13	21						
200.4	201.1		.7	.5			.08	.34	.40	13.00											
215.5	220.5		5.0	1.4				3.60	5.75	58.53											
253.4	259.1		5.7	3.2			.07	1.71	1.95	25.84											
277.8	281.0		3.2	3.1		2.26	.09	.87	.84	21.65		.25	4	12	16						
282.7	287.7		5.0	4.6			.07	.25	.46	10.69											
314.1	316.0		1.9	1.8			.16	.07	.27	6.99											
318.5	319.3		.8	.6		3.68	.14	2.88	2.07	40.50		.50	10	14	25						

DDH: FAGA084 UTM-N: 904,984.3 UTM-E: 592,128.6 UTM-ELEV: 1,297.3 TOTAL DEPTH: 456.6 SECTION: W 78
RFE: S2 RFE DIR: 230 PLUNGE ANGLES: 11 312 DHD CALC: 1 SS CALC: 1

DEPTH	ZENITH	AZIMUTH
0.000	180.000	0.000
85.300	175.000	94.500
146.300	172.000	120.500
207.300	175.000	112.500
268.200	175.000	80.500
329.200	175.000	76.000
396.200	179.000	39.000

DDH: FAGA084 UTM-N: 904,984.3 UTM-E: 592,128.6 UTM-ELEV: 1,297.3 TOTAL DEPTH: 456.6 SECTION: W 78
RFE: S2 RFE DIR: 230 PLUNGE ANGLES: 11 312 DHD CALC: 1 SS CALC: 1

DEPTH	UNIT	CODE	DESC	RECOVERY	IND
7.3	0001	#		0.5-	1
16.4	0002	5B0	(4L$) MINOR	0.5-	1
19.6	0003	5D0	(5B62) MINOR	0.5-	1
23.8	0004	5B02	(5A0)	0.5-	1
29.3	0005	5B80	[5D05]	0.5-	1
33.2	0006	5A3		0.5-	1
58.0	0007	5B80		0.5-	1
68.5	0008	5D0	&5	0.5-	1
73.8	0009	5B80	& BIO	0.5-	1
74.6	0010	5B82		0.5-	1
76.8	0011	5B80		0.5-	1
80.2	0012	5A0		0.5-	1
81.5	0013	5B$		0.5-	1
82.4	0014	5B$	(5A6) GOUGE	0.5-	1
84.7	0015	5B$	(5B8$[5D$5])	0.5-	1
85.7	0016	5A$		0.5-	1
86.1	0017	5D0$	4 (5A$)	0.5-	1
86.9	0018	5A0		0.5-	1
87.3	0019	5D$0	4 (5B$)	0.5-	1
95.8	0020	5B0$		0.5-	1
96.2	0021	5A0		0.5-	1
96.5	0022	5C3		0.5-	1
96.8	0023	5F1	[5D516]	0.5-	1
97.8	0024	5D$		0.5-	1
99.2	0025	4L$		0.5-	1
103.3	0026	4L1	(5B$) 75:25	0.5-	1
105.9	0027	5B$	&8 &2	0.5-	1
113.8	0028	5D65	[5B80] LOCALLY	0.5-	1
114.8	0029	5A0		0.5-	1
118.6	0030	5B80	&2 (5D0) MINOR	0.5-	1
122.4	0031	5A0	(5B0)	0.5-	1
133.8	0032	5B0	&2	0.5-	1
141.3	0033	5B0	BIO	0.5-	1
142.8	0034	5A0		0.5-	1
143.6	0035	4L0	&6	0.5-	1
148.7	0036	5D$4	53 (5C43)	0.5-	1
149.2	0037	4E8	&$	0.5-	1
149.4	0038	4L0	&$	0.5-	1
150.9	0039	5B46		0.5-	1
151.2	0040	4L1		0.5-	1
151.8	0041	4E$	&# &1 &7	0.5-	1
152.4	0042	4E1$	GOUGE	0.5-	1
153.2	0043	4E1#	(4C0 SERICITIC)	0.5-	1
153.5	0044	4E4	(4L0)	0.5-	1
157.4	0045	5B$0		0.5-	1
163.8	0046	5D$@	4	0.5-	1
164.9	0047	5B80	[5D05]	0.5-	1
167.0	0048	5D0		0.5-	1
167.5	0049	5B80	[5D05]	0.5-	1
168.3	0050	5B80		0.5-	1
186.5	0051	5B80	[5D05]	0.5-	1

DDH: FAGA084 UTM-N: 904,984.3 UTM-E: 592,128.6 UTM-ELEV: 1,297.3 TOTAL DEPTH: 456.6 SECTION: W 78
RFE: S2 RFE DIR: 230 PLUNGE ANGLES: 11 312 DHD CALC: 1 SS CALC: 1

DEPTH	UNIT	CODE	DESC		RECOVERY	IND
188.0	0052	5B84	6		0.5-	1
188.7	0053	5D0	&5		0.5-	1
189.6	0054	5B$			0.5-	1
190.8	0055	5B$2			0.5-	1
193.3	0056	5D0	&5		0.5-	1
199.4	0057	5A0$			0.5-	1
200.4	0058	5B$			0.5-	1
201.1	0059	4E1	BXA		0.5-	1
201.7	0060	10Q0	(5A1) (4E1)		0.5-	1
202.5	0061	5B$2			0.5-	1
203.3	0062	5B$			0.5-	1
207.5	0063	5A$	(5B$2)		0.5-	1
208.1	0064	5B$2			0.5-	1
210.0	0065	10Q0			0.5-	1
210.5	0066	5A6	&$		0.5-	1
212.0	0067	5B$	GOUGE		0.5-	1
215.5	0068	5B$	SERICITIC		0.5-	1
215.6	0069	4A0	&4		0.5-	1
216.7	0070	4L14		NO CORE	0.5-	1
219.2	0071	4G4	(4E4 POROUS)	NO CORE	0.5-	1
220.5	0072	4A0	(5A1)		0.5-	1
227.0	0073	3G0	&9		0.5-	1
246.7	0074	5B80	[5D05]		0.5-	1
248.4	0075	5D@	(3G$)		0.5-	1
248.7	0076	5A6			0.5-	1
249.9	0077	5B16	BXA		0.5-	1
250.1	0078	4L1#			0.5-	1
250.4	0079	5B0			0.5-	1
253.4	0080	5B0	&2 & SERICITIC		0.5-	1
254.6	0081	5B49		NO CORE	0.5-	1
255.8	0082	4E47	POROUS	NO CORE	0.5-	1
256.2	0083	4C75	PY, PO		0.5-	1
257.9	0084	4A13	&7 (4A0)		0.5-	1
258.3	0085	4E1	(4K0) 90:10		0.5-	1
258.8	0086	4G0	&8 MINOR		0.5-	1
259.1	0087	4E17	(4L2) MINOR		0.5-	1
277.8	0088	4A0	&$ &3 (5A1$)		0.5-	1
277.9	0089	4E17	4		0.5-	1
278.6	0090	4L0	&2 &$		0.5-	1
279.8	0091	4K81	[4E81$]		0.5-	1
280.1	0092	4K1	[4E1$]		0.5-	1
280.6	0093	4A1	&3		0.5-	1
281.0	0094	4K1	[4E1$]		0.5-	1
282.7	0095	4A0	[5A16]		0.5-	1
283.6	0096	4E1			0.5-	1
284.3	0097	4A0	(5A1)		0.5-	1
284.4	0098	4L1	&4		0.5-	1
286.7	0099	4K1	[4E1#] (4A1&3)		0.5-	1
287.7	0100	4A1			0.5-	1
300.5	0101	5B6	&1 &2 (5D@)		0.5-	1
303.0	0102	5B61	2 SERICITIC		0.5-	1

DDH: FAGA084 UTM-N: 904,984.3 UTM-E: 592,128.6 UTM-ELEV: 1,297.3 TOTAL DEPTH: 456.6 SECTION: W 78
RFE: S2 RFE DIR: 230 PLUNGE ANGLES: 11 312 DHD CALC: 1 SS CALC: 1

DEPTH	UNIT	CODE	DESC	RECOVERY	IND
304.8	0103	5B14	6	0.5-	1
308.9	0104	5B16	(4A0 NO SULPH)	0.5-	1
314.1	0105	4A1	&4 &0 (5D4$)	0.5-	1
316.0	0106	4A31		0.5-	1
318.5	0107	4A1	&0 &3	0.5-	1
318.8	0108	4G8$		0.5-	1
319.1	0109	4L12	(4H0) (4A1)	0.5-	1
319.3	0110	4C0	SERICITIC	0.5-	1
319.6	0111	4A1		0.5-	1
321.1	0112	5A16		0.5-	1
322.6	0113	5B16	SERICITIC	0.5-	1
332.6	0114	5A19	&$ &0 (4A13) 95:05	0.5-	1
364.1	0115	4A0	(5A19)	0.5-	1
364.4	0116	4L1#		0.5-	1
365.1	0117	3E2	&3	0.5-	1
374.2	0118	4A0	&# &$ (5A19&0&$)	0.5-	1
377.8	0119	5A19	&0 &$ (4A0&$ NO SULPH)	0.5-	1
395.7	0120	4A0	&$ NO SULPH	0.5-	1
397.6	0121	4A1	(5A1&9)	0.5-	1
399.2	0122	4A31		0.5-	1
400.2	0123	5B6	&$ SERICITIC	0.5-	1
400.9	0124	5A1	[4A0 NO SULPH]	0.5-	1
404.2	0125	5B62		0.5-	1
406.8	0126	5A6		0.5-	1
410.5	0127	5B62	BIO	0.5-	1
412.7	0128	5B6	&2 CHLOR BIO	0.5-	1
414.7	0129	3G9	8 CHLOR & BIO	0.5-	1
422.5	0130	5A1	&9 (4A0 &BIO P0)	0.5-	1
423.6	0131	5C$4		0.5-	1
433.3	0132	3G8	SSERICITIC	0.5-	1
434.0	0133	4L0	&6	0.5-	1
438.4	0134	3G8		0.5-	1
443.4	0135	3G8	&3 BIO CHL AND GAR	0.5-	1
445.6	0136	3D0	BIO CHLOR	0.5-	1
446.9	0137	3D6	&#	0.5-	1
454.9	0138	3G8	BIO CHLOR	0.5-	1
455.7	0139	3D8	BIO	0.5-	1
456.6	0140	1D0	BIO CHLOR	0.5-	1

DDH: FAGA084 UTM-N: 904,984.3 UTM-E: 592,128.6 UTM-ELEV: 1,297.3 TOTAL DEPTH: 456.6 SECTION: W 78
RFE: S2 RFE DIR: 230 PLUNGE ANGLES: 11 312 DHD CALC: 1 SS CALC: 1

DDH	F DEPTH	T DEPTH	FEAT	SYMTRY	S0 ANGLE	S0 DIRECT	S1 ANGLE	S1 DIRECT	S2 ANGLE	S2 DIRECT	RFE CDE	DHDC	SDC	PROCESS
FAGA084	0.0	7.9	CS2	D	0	0	0	0	78	230	0	1	1	1
FAGA084	0.0	13.1	CS2	S	0	0	58	0	73	230	0	1	1	1
FAGA084	0.0	19.7	CS2	S	0	0	0	0	72	230	0	1	1	1
FAGA084	0.0	25.8	CS2	S	0	0	0	0	77	230	0	1	1	1
FAGA084	0.0	31.7	CS2	M	0	0	0	0	76	230	0	1	1	1
FAGA084	0.0	37.8	CS2	S	0	0	73	0	77	230	0	1	1	1
FAGA084	0.0	43.9	CS2	S	0	0	72	0	77	230	0	1	1	1
FAGA084	0.0	50.0	CS2	S	0	0	74	0	80	230	0	1	1	1
FAGA084	0.0	56.1	CS2	M	0	0	0	0	74	230	0	1	1	1
FAGA084	0.0	62.2	CS2	M	0	0	0	0	80	230	0	1	1	1
FAGA084	0.0	67.7	CS2	Z	0	0	0	0	78	230	0	1	1	1
FAGA084	0.0	73.8	CS2	M	0	0	0	0	74	230	0	1	1	1
FAGA084	0.0	79.9	CS2	M	0	0	0	0	80	230	0	1	1	1
FAGA084	0.0	86.0	CS2		0	0	0	0	90	230	0	1	1	1
FAGA084	0.0	91.4	CS2	S	0	0	36	0	42	230	0	1	1	1
FAGA084	0.0	97.5	PS2		0	0	0	0	80	230	0	1	1	1
FAGA084	0.0	105.2	CS2	M	0	0	0	0	84	230	0	1	1	1
FAGA084	0.0	111.6	CS2	Z	0	0	0	0	78	230	0	1	1	1
FAGA084	0.0	117.3	CS2	M	0	0	0	0	74	230	0	1	1	1
FAGA084	0.0	123.4	CS2	M	0	0	0	0	73	230	0	1	1	1
FAGA084	0.0	130.5	CS2	S	0	0	0	0	74	230	0	1	1	1
FAGA084	0.0	136.6	CS2	Z	0	0	0	0	73	230	0	1	1	1
FAGA084	0.0	142.6	PS2	P	0	0	0	0	74	230	0	1	1	1
FAGA084	0.0	149.4	PS2	P	0	0	0	0	65	230	0	1	1	1
FAGA084	0.0	156.4	CS2	S	0	0	62	0	64	230	0	1	1	1
FAGA084	0.0	163.7	CS2	S	0	0	0	0	74	230	0	1	1	1
FAGA084	0.0	171.3	CS2	Z	0	0	88	0	78	230	0	1	1	1
FAGA084	0.0	176.8	CS2	Z	0	0	87	0	84	230	0	1	1	1
FAGA084	0.0	183.5	CS2	S	0	0	0	0	83	230	0	1	1	1
FAGA084	0.0	189.6	CS2	D	0	0	0	0	74	230	0	1	1	1
FAGA084	0.0	196.0	CS2	S	0	0	48	0	73	230	0	1	1	1
FAGA084	0.0	199.0	CS2	M	0	0	0	0	60	230	0	1	1	1
FAGA084	0.0	205.1	CS2	Z	0	0	0	0	72	230	0	1	1	1
FAGA084	0.0	208.2	CS2	Z	0	0	0	0	65	230	0	1	1	1
FAGA084	0.0	214.3	CS2	S	0	0	42	0	50	230	0	1	1	1
FAGA084	0.0	220.6	PS2		0	0	0	0	48	230	0	1	1	1
FAGA084	0.0	226.5	CS2		0	0	0	0	88	230	0	1	1	1
FAGA084	0.0	232.6	CS2	S	0	0	0	0	70	230	0	1	1	1
FAGA084	0.0	238.7	CS2	M	0	0	0	0	84	230	0	1	1	1
FAGA084	0.0	244.8	CS2	M	0	0	0	0	84	230	0	1	1	1
FAGA084	0.0	250.9	CS2	S	0	0	26	0	30	230	0	1	1	1
FAGA084	0.0	257.6	PS2		0	0	0	0	55	230	0	1	1	1
FAGA084	0.0	263.7	CS2	M	0	0	0	0	77	230	0	1	1	1
FAGA084	0.0	269.7	CS2	M	0	0	0	0	83	230	0	1	1	1
FAGA084	0.0	275.8	CS2	M	0	0	0	0	73	230	0	1	1	1
FAGA084	0.0	281.6	CS2	E	0	0	0	0	74	230	0	1	1	1
FAGA084	0.0	287.7	PS2		0	0	0	0	44	230	0	1	1	1
FAGA084	0.0	294.1	CS2	Z	0	0	87	0	78	230	0	1	1	1
FAGA084	0.0	298.7	CS2	S	0	0	57	0	69	230	0	1	1	1
FAGA084	0.0	304.8	CS2	M	0	0	0	0	73	230	0	1	1	1
FAGA084	0.0	310.9	CS2	S	0	0	0	0	76	230	0	1	1	1

DDH: FAGA084 UTM-N: 904,984.3 UTM-E: 592,128.6 UTM-ELEV: 1,297.3 TOTAL DEPTH: 456.6 SECTION: W 78
RFE: S2 RFE DIR: 230 PLUNGE ANGLES: 11 312 DHD CALC: 1 SS CALC: 1

DDH	F DEPTH	T DEPTH	FEAT	SYMTRY	S0 ANGLE	S0 DIRECT	S1 ANGLE	S1 DIRECT	S2 ANGLE	S2 DIRECT	RFE CDE	DHDC	SDC	PROCESS
FAGA084	0.0	318.2	CS2	S	0	0	0	0	75	230	0	1	1	1
FAGA084	0.0	324.3	CS2	S	0	0	0	0	78	230	0	1	1	1
FAGA084	0.0	329.5	CS2	S	0	0	0	0	75	230	0	1	1	1
FAGA084	0.0	335.3	CS2	S	0	0	58	0	67	230	0	1	1	1
FAGA084	0.0	341.1	CS2	M	0	0	0	0	81	230	0	1	1	1
FAGA084	0.0	345.9	CS2	S	0	0	0	0	69	230	0	1	1	1
FAGA084	0.0	351.4	CS2	S	0	0	48	0	63	230	0	1	1	1
FAGA084	0.0	357.8	CS2	S	0	0	53	0	63	230	0	1	1	1
FAGA084	0.0	363.9	CS2	S	0	0	58	0	70	230	0	1	1	1
FAGA084	0.0	370.9	CS2	S	0	0	74	0	78	230	0	1	1	1
FAGA084	0.0	377.0	CS2	S	0	0	68	0	74	230	0	1	1	1
FAGA084	0.0	383.1	CS2	S	0	0	48	0	65	230	0	1	1	1
FAGA084	0.0	391.1	CS2	Z	0	0	0	0	77	230	0	1	1	1
FAGA084	0.0	396.9	CS2	S	0	0	60	0	69	230	0	1	1	1
FAGA084	0.0	403.3	CS2	S	0	0	65	0	80	230	0	1	1	1
FAGA084	0.0	409.3	CS2		0	0	0	0	82	230	0	1	1	1
FAGA084	0.0	416.4	CS2	S	0	0	0	0	84	230	0	1	1	1
FAGA084	0.0	424.6	CS2	S	0	0	76	0	80	230	0	1	1	1
FAGA084	0.0	430.7	CS2	S	0	0	0	0	83	230	0	1	1	1
FAGA084	0.0	436.8	PS2		0	0	0	0	66	230	0	1	1	1
FAGA084	0.0	442.9	PS2		0	0	0	0	90	230	0	1	1	1
FAGA084	0.0	449.0	PS2		0	0	0	0	82	230	0	1	1	1
FAGA084	0.0	455.1	PS2		0	0	0	0	68	230	0	1	1	1

DDH: FAGA084 UTM-N: 904,984.3 UTM-E: 592,128.6 UTM-ELEV: 1,297.3 TOTAL DEPTH: 456.6 SECTION: W 78
RFE: S2 RFE DIR: 230 PLUNGE ANGLES: 11 312 DHD CALC: 1 SS CALC: 1

DDH	F DEPTH	T DEPTH	FEAT	REC CD	PARLL	UPPER PLANE		INTERNAL PLANE		LOWER PLANE		DHD
FAGA084	12.0	12.3	X			0	0	0	0	0	0	1
FAGA084	0.0	64.2	G			0	0	21	0	0	0	1
FAGA084	81.5	82.3	G			0	0	0	0	0	0	1
FAGA084	83.0	83.2	G			0	0	0	0	0	0	1
FAGA084	84.7	85.7	R			0	0	0	0	0	0	1
FAGA084	86.8	87.2	R			0	0	0	0	0	0	1
FAGA084	89.1	89.4	G			0	0	0	0	0	0	1
FAGA084	89.7	90.2	G			99	999	0	0	0	0	1
FAGA084	95.8	96.1	R			0	0	0	0	0	0	1
FAGA084	96.2	96.3	1G			0	0	0	0	0	0	1
FAGA084	119.9	120.3	R			0	0	0	0	0	0	1
FAGA084	147.4	148.1	RG			0	0	0	0	0	0	1
FAGA084	149.1	149.4	G			0	0	0	0	0	0	1
FAGA084	149.4	150.8	PR	4		0	0	0	0	0	0	1
FAGA084	0.0	151.7	X			0	0	0	0	0	0	1
FAGA084	151.7	152.4	GR			0	0	0	0	0	0	1
FAGA084	0.0	153.4	G			0	0	0	0	0	0	1
FAGA084	155.2	155.4	G			0	0	0	0	0	0	1
FAGA084	167.8	168.3	G			0	0	99	999	0	0	1
FAGA084	173.9	174.0	G			0	0	0	0	0	0	1
FAGA084	200.3	201.0	XR			0	0	0	0	0	0	1
FAGA084	201.0	201.7	Q			0	0	99	999	0	0	1
FAGA084	208.1	210.0	QP	0		0	0	0	0	0	0	1
FAGA084	210.0	210.4	R			0	0	0	0	0	0	1
FAGA084	210.4	211.9	GR			0	0	0	0	0	0	1
FAGA084	215.4	215.6	RG			0	0	0	0	0	0	1
FAGA084	215.6	219.1	NNN			0	0	0	0	0	0	1
FAGA084	248.7	249.9	X			0	0	0	0	0	0	1
FAGA084	250.1	250.4	X			0	0	0	0	0	0	1
FAGA084	253.3	255.8	NNN			0	0	0	0	0	0	1
FAGA084	301.4	302.9	G			0	0	99	999	0	0	1
FAGA084	320.4	320.6	G			0	0	0	0	0	0	1
FAGA084	319.5	321.1	R			0	0	0	0	0	0	1
FAGA084	421.5	421.8	G			0	0	0	0	0	0	1
FAGA084	433.9	434.0	G			0	0	0	0	0	0	1

DDH: FAGA084 UTM-N: 904,984.3 UTM-E: 592,128.6 UTM-ELEV: 1,297.3 TOTAL DEPTH: 456.6 SECTION: W 78
RFE: S2 RFE DIR: 230 PLUNGE ANGLES: 11 312 DHD CALC: 1 SS CALC: 1

DDH	SEGMENT NOS	COND INDICATOR
FAGA084	1	2
FAGA084	2	2
FAGA084	3	2
FAGA084	4	2
FAGA084	5	2
FAGA084	6	2
FAGA084	7	1

**THIS REPORT WAS REQUESTED BY: LEEP .GEOLOGY AT: 09:19:59

CYPRUS ANVIL MINING CORPORATION

DIAMOND DRILL CORE LOG

Date: 9 SEPT/81

Hole Number: FAGA-084 (75-A-084)

Project: GRUM RELOG

Location: SECTION 78W

Claim: ———

UTM ~~Terr. Plane~~ Co-ords.: 6 904 984.3m N

1979 HIW Survey

592 128.6m E

Grid Co-ords: 0+0N

78W

Elevation: 1297.3m

Reference Fabric Orientation Diagram:

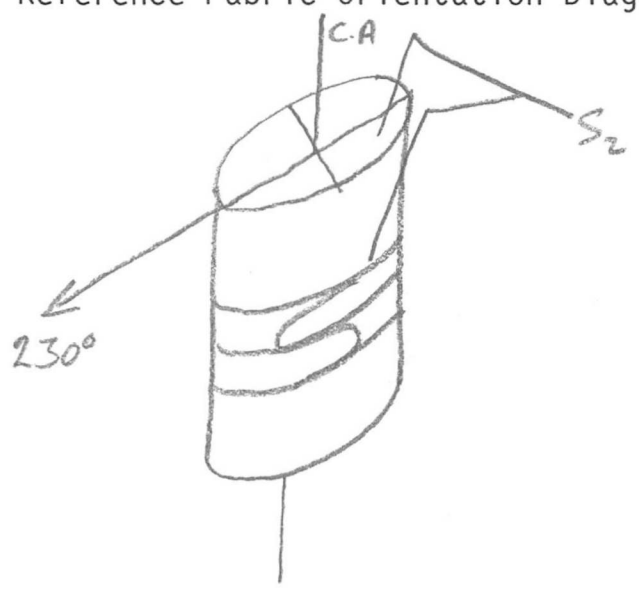

All symmetry determinations looking

NW with S_2 dipping

SW with dip azimuth 230°.

Total Depth: 1498 ft.

Purpose: TO DETERMINE NORTHERN EXTENSION OF DEPOSIT

Reason hole Terminated: THROUGH MAIN SULPHIDES

Logged by: GG

Date(s) Logged: 7-9 SEPT/81

Drilling Contractor: ———

Hole Cemented: 25 BAGS CEMENT 24-1498'

Steel down hole: ———

Size	CORE From	To
TRICONE	0	20'
BW	20	24'
BQ	24	1498'

Collar Cased and Capped: ———

Started: 13 JUNE/75 Completed: 22 JUNE/75

Cyprus Anvil Mining Corp.

DDH FAGA084 (2 / 8)

Diamond Drill Core Log Date: _____ Logged By: GG

Code	Drillhole	Elevation	Northing	Easting	Units (feet/metres)	R.F.E.	
1	2 8	10 16	17 24	25 32	34 39	41 42	
T	FAGA084	1297.3	9049843.3	592128.6	FEET	S2	

Code	Drillhole	FEET Depth	Zenith Angle	True Azimuth	Comments
1	2 8	10 14	22 26	28 32	34 56
R	FAGA084	0.0	180.0	0.0	AT COLLAR
R	FAGA084	280.0	175.0	94.5	TROPARI MAG
R	FAGA084	480.0	172.0	120.5	
R	FAGA084	680.0	175.0	112.5	
R	FAGA084	880.0	175.0	89.5	
R	FAGA084	1080.0	175.0	76.0	
R	FAGA084	1300.0	179.0	39.0	

Code	Drillhole	Comments, Errant Remarks, Snivellings and / or Lewd Suggestions
1	2 8	10 56

DDH EAGA084 (2 — 8)

Cyprus Anvil Mining Corp.

Lithologic Log

Date: 7 Sept/81 Logged By: GG

FEET

Code	From	To	Recov.	No.	Unit	Description	F/W CNT TYPE	F/W CNT %
1	10 14	16 20	22 24	26 28	30 34	35		
L	000	240		001	*	CASING - K.A. NOTES THAT	—	
						CASING DRIVEN THROUGH		
						ALOT OF INCOMPETENT BEDROCK;		
L	240	538		2	5B3	+(minor 4L* - DOLO & BRECCIATED		11S2
						@39.6-40.4')		
L	538	642		3	5D3	+(10% CALCITE VNS 11S2)		11S2
						+(minor 5B62)		
L	642	782		4	5B32	+(SA3)		11S2
L	782	960		5	5B83	[SD35]		11S2
L	960	1088		6	5A3	-TEXTURALLY SIMILAR TO 4A0	GRADES 0.2m	11S2
						WITH CALCITE RATHER THAN QZ VNS;		
L	1088	1902		7	5BB3			11S2
L	1902	2246		8	5D3	±5; 6cm GOUGE@21° TO C.A. (S2=90°)	5cm QZ VN 11S2	
						@210-9';		
L	2246	2420		9	5B83	± BIOTITE		11S2
L	2420	2447		10	5B82	13/		11S2
L	2447	2520		11	5B83		GRADES 0.5m	11S2
L	2520	2631		12	5A3	HIGH CARBON;	GRADES 0.4m	11S2
L	2631	2674		13	5B*	DOLO		11S2
L	2674	2703		14	5B*	DOLO + (5A6)	GOUGE	
						UNIT = 90% GOUGE - CNTS?		
						POSS 11S2		
L	2703	2780		15	5B*	DOLO + (5D*5 - DOLO)	20 cm GOUGE +	
						GOUGE @ 272.5 - 273.0' - CNTS?	BRECCIA - CNTS?	
L	2780	2813		16	5A*	- DOLO, HIGH CARBON;		11S2
						UNIT = COARSE RUBBLE IN		
						CORE BOX;		
L	2813	2826		17	5D3*	/4/ - DOLO + (5A* - DOLO)		11S2
L	2826	2850		18	5A3			11S2
L	2850	2864		19	5D*3	/4/ - AS UNIT 17 + (5B* - DOLO)		11S2
						UNIT = COARSE RUBBLE		
L	2864	3144		20	5B3*	MOD CALC ± DOLO;	5cm QZ-CB VN 11S2	
						GOUGES @ 292.6 - 293.5 - CNTS?		
						& 294.6 - 296.0 - CNTS		
						- WITH		

H/W QZ VNS 11S2

DDH FAGA084 (2 — 8)

Cyprus Anvil Mining Corp.

Lithologic Log

Date: 7 SEPT/81 Logged By: GG

FEET

Code	From	To	Recov.	No.	Unit	Description	F/W CNT TYPE	%
1	10 — 14	16 — 20	22 — 24	26 — 28	30 — 34	35		
L	3144	3155		21	5A3	UNIT = COARSE RUBBLE IN BOX	PROB	11S2
L	3155	3166		22	5C3	3% FUCHSITE;		11S2
						MINOR GOUGE 11S2 @ 315.8-316.1		11
L	3166	3176		23	5F1	[SD516] -V. SILICEOUS;	10cm QZ VN 11S2	
L	3176	3210		24	5D*	DOLO; 2% CHLORITE STREAKS;		11S2
L	3210	3256		25	AL*	DOLO - N.B. - FOR THE		11S2
						LAST FEW INTERVALS THERE		
						HAS BEEN 2-3 FEET		
						MORE CORE IN THE BOXES		
						THAN THE DRILLERS' TAGS		
						INDICATE;		
L	3256	3390		26	4L1	+(5B* - DOLO = 25% OF UNIT)	18cm QZ VN 11S2	
L	3390	3473		27	5B*	DOLO ±8±2	GRADES 0.4m	11S2
L	3473	3733		28	5D65	[LOCALLY 5B83]	8cm QZ VN 11S2	
L	3733	3768		29	5A3			11S2
L	3768	3890		30	5B83	±2+(minor 5D3-MASS)		11S2
L	3890	4017		31	5A3	±(5B3 @ 1m H/W)		11S2
						COARSE RUBBLE 393.4-395.0		
						-PROB NOT FAULT.		
L	4017	4390		32	5B3	±2		11S2
L	4390	4637		33	5B3	-BIOTITIC		11S2
L	4637	4686		34	5A3		GRADES 3cm	11S2
L	4686	4712		35	4L0	±6		11S2
L	4712	4880		36	5D*4	/5/3/ [POSS 5C43 @ 1m H/W] -V. CHLORITIC	10cm QZ VN PROB 11S2	
						[5F?]		
						483.6-486.0 = GOUGE + RUBBLE;		
						CNTS?		
L	4880	4895		37	4E8	±* DOLO;		11S2
L	4895	4903		38	4L0	±* DOLO; 30% OF UNIT =	PROB	11S2
						GOUGE PROB 11S2		
L	4903	4950		39	5B46	UNIT = MISSING CORE + RUBBLE	RUBBLE	
						~2 ft RECOVERY;		
L	4950	4959		40	4L1			PROB 11S2
L	4959	4979		41	4E*	/DOLO ± CALC/±1/±7/	GOUGE	
						BRECCIATED @ 10cm F/W;		
L	4979	5000		42	4E1*	[GOUGE] ± RUBBLE; CNTS?	GOUGE	

DDH FAGA084 (2 — 8)

Cyprus Anvil Mining Corp.

Lithologic Log

Date: 8 SEPT/81 Logged By: GG

FEET

Code	From	To	Recov.	No.	Unit	Description	F/W CNT TYPE	F/W CNT #
1	10 — 14	16 — 20	22 — 24	26 — 28	30 — 34	35		
L	5000	5025		A3	AE1*	-CALC +(4CO SERICITIC)	GOUGE	
L	5025	5035		A4	4EA1	+(4LO) → [GOUGE] CNTS?	"	
L	5035	5165		4S	SB*3	DOLO + SLIGHTLY CALC;		11S2
						GOUGE @ 509.5 - 510.0 - CNTS?		
L	5165	5374		A6	5D*3	/4/ - ANK/DOLO;		11S2
L	5374	5410		A7	5D35	[5B83]		11S2
L	5410	5479		A8	5D31	MASS		11S2
L	5479	5494		A9	5D315			11S2
L	5494	5523		50	5B83	550.8 - EOI = GOUGE 11S2?	GOUGE	
L	5523	6120		51	5D315	(570.6 - 571.0 = GOUGE +		11S2
						F/W CALCITE VEINS - CNTS?)		
						+(585.5 - 586.7 = 5E8)		
						+(605.2 - 605.8 = 5B823)		
L	6120	6168		52	5B84	/6/		11S2
L	6168	6192		53	5D31	±5		11S2
L	6192	6222		54	5B*	DOLO		11S2
L	6222	6260		55	5B*2	-DOLO		11S2
L	6260	6342		56	5D31	±5		11S2
L	6342	65A3		57	5A3*	DOLO		11S2
L	65A3	6574		58	5B*	DOLO	RUBBLE	
L	6574	6597		59	AE1	BRECCIA	RUBBLE	
						4L1 CLASTS (<1cm DIA) IN		
						OPEN 4E1 MATRIX		
						+(10 QO 11S2)		
						UNIT = RUBBLE IN COREBOX;		
L	6597	6618		60	10Q10	11S2 +(5A1) + (4E1)		11S2
L	6618	6643		61	5B*2	-DOLO		
L	6643	6669		62	5B*	DOLO		11S2
L	6669	6807		63	5A*	DOLO +(5B*2)	20cm GOUGE CNTS?	
L	6807	6828		64	5B*2	DOLO		
L	6828	6890		65	10Q10	0.5 ft RECOVERY - [FAULT?]	RUBBLE	
L	6890	6905		66	5A6	±*-DOLO; HIGH CARBON;	RUBBLE	
						UNIT = COARSE RUBBLE IN BOX;		
L	6905	6955		67	5B*	[GOUGE] + RUBBLE - CNTS?	—	
L	6955	7070		68	5B*	DOLO, SERICITIC;	10cm GOUGE-CNTS?	
L	7070	7075		69	4A0	±4 - RUBBLE + GOUGE;	—	

DDH FAGA084 (2 — 8)

Cyprus Anvil Mining Corp.

Lithologic Log

Date: 8 SEPT/81 Logged By: GG

FEET

Code	From	To	Recov.	No.	Unit	Description	F/W CNT TYPE	F/W CNT #
1	10 14	16 20	22 24	26 28	30 34	35		
L	7075	7110		70	4L14	707-719 - WHOLE CORE	—	
						REMOVED BY K.A. - LITHOLOGY		
						INTERPRETED FROM K.A. LOGS;		
L	7110	7190		71	4GA	+ (4E4 - POROUS)	—	
L	7190	7235		72	4A0	±4 @ .3m H/W		11S₂
						+ (5A1 - HIGH CARBON)		
L	7235	7446		73	3G2	±9; DK GREY, F-G.;		11S₂
L	7446	8093		74	5D35	774-801 = [SB83]		11S₂
L	8093	8150		75	5D*	ANK, MAGS + (3G*-DOLO)		11S₂
L	8150	8160		76	5A6	HIGH CARBON;	2cm GOUGE ~~FB~~ CN75?	
L	8160	8200		77	5B116	BRECCIA →	34/180 W.P.I.	
						(5B16 + 10Q*-CALC + 5A16)	S_2 = 58/230	
						0.2-3cm ROUNDED TO ANGULAR		
						CLASTS IN CLOSED		
						V. SILICEOUS MATRIX;		
L	8200	8207		78	4L11*	CALC		11S₂
L	8207	8216		79	5B3	BRECCIA - 5B3 IN CLOSED		11S₂
						CALCITE MATRIX - PROB NO		
						SIGNIFICANT MOVEMENT;		
L	8216	8313		80	5B3	/DK GREY/±2/±SERICITIC @ F/W/ —		
L	8313	8353		81	5BA9	831.3-837.4 - WHOLE CORE	—	
						REMOVED BY K.A. - LITHOLOGY		
						INTERPRETED FROM K.A. LOGS;		
L	8353	8394		82	4E47	-POROUS;	—	
L	8394	8405		83	4A75	PY + PØ; see assays		11S₂
L	8405	8462		84	4A13	/±7 @ 0.4m H/W/		11S₂
						+ (4A0 @ 0.2m F/W)		
L	8462	8474		85	4E1	+ (4K0 = 10%)		11S₂
						↳ BRECCIATED APPEARANCE;		
L	8474	8490		86	4G0	/±8 @ 848.3/;		11S₂
L	8490	8500		87	4E17	/~5% = P0/ + (4L2 @ 6cm H/W)		11S₂
						+ (ONE 5B61 CLAST (5cm)		
						IN MIDDLE OF UNIT)		
L	8500	9113		88	4A0	/±* DOLO/±3/ - NO SULPHIDES/	RUBBLE PROB	11S₂
						+ (5A1* - DOLO)		
						THIS IS THE TYPE OF		

MATERIAL WHICH IS LATERALLY FACIES EQUIVALENT TO ORE;

DDH FAGA084 (2–8)

Cyprus Anvil Mining Corp.

Lithologic Log

Page 7 of 15

Date: 8 Sept/81 Logged By: GG

FEET

Code	From	To	Recov.	No.	Unit	Description	F/W CNT TYPE	∡
1	10–14	16–20	22–24	26–28	30–34	35		
L	911 3	911 8		89	4E17	/4/ + (2% 4LO CLASTS)		//S2
L	911 8	914 2		90	4L0	±2/ * DOLO		//S2
L	914 2	918 0		91	4K81	± SERICITIC ± QZ (4K1)? CLOTS ± CB	MASS SULPHIDE	
						AS BELOW;		
L	918 0	919 1		92	4K1	- 20% .2-2cm	3cm QZ VN //S2	
						ROUNDED TO IRREG		
						NON-CALC/DOLO QZ CLOTS;		
L	919 1	920 5		93	4A1	±3 + (3G12 - FINELY INTERBANDED)		//S2
L	920 5	922 0		94	4K1	AS UNIT 92 WITH 5%		//S2
						QZ CLOTS		
L	922 0	927 5		95	4A0	[5A16] - QZ = WHITE TO GREY;	PROB	//S2
						+ (minor 4E1 AS 3cm BANDS)		
L	927 5	930 3		96	4E1			//S2
L	930 3	932 6		97	4A0	+ (5A1 - HIGH CARBON)		//S2
L	932 6	933 2		98	4L1	±4		//S2
L	933 2	940 7		99	4K1	CALC-QZ CLOTS =		//S2
						5% AT H/W		
						60% AT F/W		
					see groups	+ (4A1±3 @ 933.5-934.3')		
L	940 7	943 8		100	4A1 ~~4~~	+ (3G12 - FINELY INTERBANDED)	12 cm QZ VN //S2.	
L	943 8	986 0		101	5B6	±1±2;	PROB	//S2
						+ (5D* - ANIC, MASS @		
						972.5-973.0 & 973.5-974.0')		
L	986 0	994 0		102	5B61	/2/ - SERICITIC;	GOUGE	
						989 - EOI = 60% GOUGES //S2		
L	994 0	1000 0		103	5B14	/6/		//S2
L	1000 0	1013 4		104	5B16	+ (4A0 - NO SULPHIDES)		
						TRANSITIONAL INTERFINGERING		
						UNIT;		
NO ASSAY → L	1013 4	1030 6		105	4A1	±4±0 + (5D4*)		//S2
L	1030 6	1036 6		106	4A31	C-PARTINGS		
L	1036 6	1045 1		107	4A1	±0±3; C & PHYLLITIC PARTINGS		//S2
					see groups	& BANDS;		
L	1045 1	1046 0		108	4G8 ~~4~~	/*/ - DOLO = 25%, BARITE ≐ 5%;		//S2
L	1046 0	1046 8		109	4L12	@ H/W 12cm/ + (4H0 - next 4 cm)		//S2
						+ (4A1 @ F/W 7cm)		

DDH EAGA084 (2 — 8)

Cyprus Anvil Mining Corp.

Lithologic Log

Date: 9 SEPT/81 Logged By: GG

Code	From	To	Recov.	No.	Unit	Description	F/W CNT TYPE	%
1	10 14	16 20	22 24	26 28	30 34	35		
L	1389 8	1421 5		132	3G28	-SERICTIC	2cm QZ VN 11S2	
L	1421 5	1424 0		133	4L01	±6/	GOUGE	
						1423.6-1424.0' = GOUGE + H/W QZ VN-		
						CNTS?		
L	1424 0	1438 4		134	3G82			11S2.
L	1438 4	1454 7		135	3G28	±3; BIOTITE + CHLORITE +		11S2
						INCIPIENT ANDALUSITE (??) AT		
						0.5m H/W ± LOCAL CLUSTERS		
						OF RED GARNETS → FIRST		
						GARNETS AT 1439.4';		
L	1454 7	1462 0		136	3D01	V. SILICEOUS QZ-BIOTITE-CHLORITE		11S2
						ROCK - NON-CALC;		
						+ (3G82)		
L	1462 0	1466 2		137	3D(6)	±CALC		11S2
L	1466 2	1492 3		138	3G82	-BIOTITE, CHLORITE ± SERICITE		11S2
						+ (3D(6))		
L	1492 3	1495 0		139	3D(8)	20% BIOTITE; V. SERICITIC		11S2
						SURFACE - BECOMING SCHISTOSE;		
L	1495 0	1498 0		140	1D0	BIOTITE + CHLORITE + SERICITIC		
						SURFACES;		
						END OF HOLE @ 1498 ft;		

FEET

DDH EAGA084 (2 — 8)

Cyprus Anvil Mining Corp.

Structural Log

Date: 9 Sept/81 Logged By: GG

FEET

Code	From	To	Feature	Sym	S_0 Dip Direct.	S_1 Dip Direct.	S_2 Dip Direct	Description
1	10 — 14	16 — 20	22 — 24	26	28 — 32	34 — 38	40 — 44	
S		2160	CSZ	D			78 2310	
S		4130	CSZ	S		58 010	73	
S		6145	CSZ	S			72	
S		8145	CSZ	S			77	S-DOMINANT OVER M
S		10140	CSZ	M			76	REVERSING S/Z
S		12140	CSZ	S		73 010	77	
S		14140	CSZ	S		72 010	77	
S		16140	CSZ	S		74 010	80	S-DOMINANT OVER M & H.
S		18140	CSZ	M			74	REVERSING S/Z
S		20140	CSZ	M			80	+Z
S		22120	CSZ	Z			78	
S		24120	CSZ	M			74	REVERSING S/Z
S		26120	CSZ	M			80	REVERSING E/3
S		28120	CSZ	H			90	
S		30000	CSZ	S		36 010	42	
S		32000	IND	R			80	Z? ONE Z-FOLD SEEN
S		34150	CSZ	M			84	?
S		36160	CSZ	Z			78	
S		38150	CSZ	M			74	REVERSING S/Z
S		40150	CSZ	M			73	
S		42180	CSZ	S			74	S-DOMINANT OVER Z
S		44180	CSZ	Z			73	
S		46180	PSZ	P			74	
S		47100	PSZ	P			65	
S		51130	CSZ	S		62 000	64	
S		53170	CSZ	S			74	
S		56120	CSZ	Z		88 000	78	
S		58100	CSZ	Z		87	84	
S		60120	CSZ	S			83	S-DOMINANT OVER Z
S		62120	CSZ	D			74	
S		64130	CSZ	S		48 010	73	F4 @ 18/090
S		65130	CSZ	M			60	REVERSING S/Z
S		67130	CSZ	Z			72	F4 @ 32/140
S		68130	CSZ	Z			65	? POOR Z'S
S		70130	CSZ	S		42 000	50	

DDH EAGAD84 (2 — 8)

Cyprus Anvil Mining Corp.

Structural Log

Date: 9 Sept/81 Logged By: GG

FEET.

Code	From	To	Feature	Sym	S_0 Dip Direct.	S_1 Dip Direct.	S_2 Dip Direct	Description
1	10 — 14	16 — 20	22 — 24	26	28 — 32	34 — 38	40 — 44	
S		7237	IND	R			48	
S		7430	CSZ	H			88	
S		7630	CSZ	S			70	S-DOMINANT OVER Z
S		7830	CSZ	M			84	REVERSING S/Z
S		8030	CSZ	M			89	REVERSING E/3
S		8230	CSZ	S		260	30	F_4 @ 016/330
S		8450	IND	R			55	
S		8650	CSZ	M			77	REVERSING E/3/S/Z.
S		8850	CSZ	M			83	"
S		9050	CSZ	M			73	"
S		9240	CSZ	E			74	0.3 m FOLD
S		9440	IND	R			44	
S		9650	CSZ	Z		870	78	Z-DOMINANT OVER M
S		9800	CSZ	S		570	69	
S		10000	CSZ	M			73	REVERSING S/Z.
S		10200	CSZ	S			76	S-DOMINANT OVER Z
S		10440	CSZ	S			75	
S		10640	CSZ	S			78	S-DOMINANT OVER M
S		10810	CSZ	S			75	
S		11000	CSZ	S		580	67	
S		11190	CSZ	M			81	REVERSING S/Z
S		11350	CSZ	S			69	
S		11530	CSZ	S		480	63	
S		11740	CSZ	S		530	63	
S		11940	CSZ	S		580	70	
S		12170	CSZ	S		740	78	
S		12370	CSZ	S		680	74	
S		12570	CSZ	S		480	65	
S		12830	CSZ	Z			77	Z-DOMINANT OVER S
S		13020	CSZ	S		610	69	+R-ABUNDANT.
S		13230	CSZ	S		650	80	
S		13413	CSZ	H			82	S_2 DIP GOES THROUGH REVERSALS
S		13660	CSZ	S			84	H?
S		13930	CSZ	S		760	80	
S		14130	CSZ	S			83	R-DOMINANT
S		14330	CSZ	R			66	RARE V. SMALL S's OBSCURED

DDH FAGA084 (2 8)

Cyprus Anvil Mining Corp.

Structural Log

Page 12 of 15

Date: 9 Sept/81 Logged By: GG

FEET

Code	From	To	Feature	Sym	S_0 Dip Direct.	S_1 Dip Direct.	S_2 Dip Direct	Description
1	10 14	16 20	22 24	26	28 32	34 38	40 44	
S		14530	CS2	H			90	
S		14730	CS2	R			82	S? - SOME POOR S-FOLDS
S		14930	CS2	R			68	
								END OF HOLE @ 1498'

THAT'S ALL FOLKS!

DDH FAGA084 (2 … 8) Cyprus Anvil Mining Corp

Logged by GG

ASSAY LOG (SAMPLER'S COPY) Date 7 SEPT/81 Sampled by

CODE	FROM	TO	SAMPLE	INTR.	REC (m)	UNIT	DESCRIPTION
1	10 … 14	16 … 20	22 … 26	28 … 30	32 … 34	36 … 40	42
P	4880	4895	110711	15	15	4E8	±*
P	4959	5000	11702	41	36	4E*	+GOUGE
P	5000	5025	11703	25	23	4E1*	+(4CO)
P	5025	5035	11704	10	05	4E4	+(4LO)→GOUGE
P	6574	6597	11705	23	15	4E1	BRECCIA
P	7070	7075	11706	05	05	4A0	±4 – RUBBLE + GOUGE
P	7075	7110	11707	35		4L14	WHOLE CORE REMOVED BY K.A. SEE K.A. ASSAY #2046
P	7110	7190	11708	80		4G4	+(4E4-POROUS) / WHOLE CORE REMOVED BY K.A. SEE K.A. ASSAY #2047
P	7190	7235	11709	45	45	4A0	±4 +(5A1)
P	8313	8353	11710	40		5B49	WHOLE CORE REMOVED BY K.A. SEE K.A. ASSAY #2048
P	8353	8394	11711	41		4E47	WHOLE CORE REMOVED BY K.A. SEE K.A. ASSAY #2049
P	8394	8405	11712	11	10	4D75	
P	8405	8462	11713	57	57	4A13	±7
P	8462	8474	11714	12	12	4E1	+(4KO)
P	8474	8490	11715	16	16	4G0	±8
P	8490	8500	11716	10	10	4E17	
P	9113	9118	11717	05	05	4E17	4
P	9118	9142	11718	24	24	4L0	±2
P	9142	9180	11719	38	38	4E81	
P	9180	9191	11720	11	11	4E1	[4K1]
P	9191	9205	11721	14	12	4A1	±3
P	9205	9220	11722	15	15	4E1	
	9220	9275		55		4A0	LOW GRADE NOT SAMPLED // ASSAY = 0 %
P	9275	9303	11723	28	27	4E1	
P	9303	9332	11724	29	21	4A0	+(4L1±4)
P	9332	9407	11725	75	75	4K1	
P	9407	9438	11726	31	30	4A14	
P	10306	10366	11727	60	59	4A31	
P	10451	10460	11728	09	08	4G84	/*/
P	10460	10468	11729	08	07	4L12	+(4H0)+(4A1)

FEET

SPLIT

SPLIT

SPLIT

SPLIT

DDH EAGA084 Cyprus Anvil Mining Corp

Logged by GG

ASSAY LOG (SAMPLER'S COPY) Date 9 SEPT/81 Sampled by

FEET

CODE	FROM	TO	SAMPLE	INTR.	REC (m)	UNIT	DESCRIPTION
1	10 14	16 20	22 26	28 30	32 34	36 40	42
P	10468	10475	11730	07	07	4C10	SERICITIC
							END OF HOLE @ 1498 ft.

DDH EAGA084 (2 — 8)

Cyprus Anvil Mining Corp.

~~Structural Log~~ GEOTECHNICAL LOG

Date: 7 SEPT Logged By: GG

FEET

Code	From	To	Feature	Sym	S_0 Dip Direct.	S_1 Dip Direct.	S_2 Dip Direct	Description
1	10 — 14	16 — 20	22 — 24	26	28 — 32	34 — 38	40 — 44	
								NO "ORE" WAS
								ENCOUNTERED IN THE
								PROJECTED UNDERGROUND
								WORKINGS
								∞ NO GEOTECH LOG
								WAS COMPLETED.

FEET!

FAULT

DDH FAGA084 (2 / 8)

Cyprus Anvil Mining Corp.

Structural Log

Page _____ of _____

Date: 4 Oct/83 Logged By: _____

Code	From	To	Feature	Sym	S_0 Dip Direct.	S_1 Dip Direct.	S_2 Dip Direct	Description
1	10 14	16 20	22 24	26	28 32	34 38	40 44	
F	13196	14104	XI					bxaked 4L
F		21109	GI			21 0010		6 cm gouge @ 21° to C.A.
F	21674	21703	GI					unit 90% gouge, poss. $\parallel S_2$
F	21725	21730	GI					IND
F	21780	21813	RI					rubble in core box
F	21850	21864	RI					coarse rubble
F	21926	21935	GI					IND
F	21946	21960	GI		919 9919			H.W. $\parallel S_2$
F	31144	31155	RI					coarse rubble
F	31158	31161	IGI					minor gouge
F	31934	31950	RI					coarse rubble
F	14136	14160	RIGI					gouge rubble IND
F	14195	14903	GI					30% of unit gouge
F	14903	14950	PRI	4				40% recovery of rubble
F		14980	XI					bxaked
F	14979	15000	GRI					IND gouge & rubble
F		15035	GI					IND gouge @ EOI
F	15095	15100	GI					IND gouge
F	15508	15523	GI			919 9919		gouge $\parallel S_2$
F	15706	15710	GI					gouge
F	16574	16597	XIRI					bxa 4L clasts, rubble
								in box
F	16597	16618	QI			919 9919		$\parallel S_2$
F	16828	16890	QPI	0				8% recovery
F	16890	16905	RI					coarse rubble
F	16905	16955	GRI					IND gouge + rubble
F	17070	17075	RIGI					rubble + gouge
F	17075	17190	NINI					No core KA sample
F	18116	18210	XI					Bxa in siliceous matrix
F	18207	18216	XI					5B in cc matrix
F	18313	18394	NINI					No core - KA sample
F	19180	19140	GI			919 9919		60% gouges $\parallel S_2$
F	10148 5	10153 5	RI					rubble
F	10151 4	10151 9	GI					IND gouge
F	13181 3	13184 0	GI					IND gouge
F	14123 6	14240	GI					IND gouge

DIAMOND DRILL RECORD

LOGGED BY S. B. Reamsbottom

PROPERTY VANGORDA, GRUM JOINT VENTURE BY TROPARI

D.D.H. No. 75-A84 PAGE 1 of 12

LATITUDE (HIW Coords 10,782.49 m N) BL 0 + 0 (Line Grid)

BEARING OF HOLE 202' -- error; 280' -- 93° 50'; 480' -- 119° 50'; 680' -- 111° 50'

STARTED June 13, 1975 D.S.

CLAIM No.

DEPARTURE (7435.08 m E) 78 W

DIP OF HOLE 880' -- 79° 50'; 1080' -- 75° 20'; 1400' -- 38° 20'

COMPLETED June 22, 1975 N.S.

DIRECTION AND DISTANCE FROM NE. CLAIM POST

ELEVATION (1307.89 metres) 4248' (approx.)

DIP TESTS -90°: 220' -- error; 280' -- 85°; 480' -- 82°; 680' -- 85°; 880' -- 85°; 1080' -- 85°; 1400' -- 89°

DEPTH Proposed: 1360'; Ultimate: 1498' (45 6.59 metres)

HOLE SIZE: 0 - 20' -- 3 7/8" Tricone; 20 - 24' -- BW; 24 - 1498' -- BQ

FOOTAGE FROM	FOOTAGE TO	DESCRIPTION	Rec. Ft.	Sample No.	Footage From	Footage To	Sample Length	Assay Pb	Assay Zn	Assay Ag	Assay Au	Assay Cu	Assay x Feet Pb	Assay x Feet Zn	Assay x Feet Ag
0	24	OVERBURDEN (?) Casing ? Suspect overburden negligible.													
		* O.B. = 1 foot. Drill set up 2 ft. below original surface. Hole collared on bedrock (-1) Loose shaly bedrock, unable to core.													
		* [illegible]													
24	96 ✓	GRAY, QUARTZ - SERICITE PHYLLITE													
		Excellent F2 foliation with many small-scale F2 folds. Blebs of pyrite and pyrrhotite. Thin zone of chlorite carbonate phyllite	7/10.5		53.5	64									
		@ 53.5-64'. Locally graphitic. Rock broken @ 50-64'.	5/7		64	71									
		Core Angle: 30' = 69°, 40' = 85°, 50' = 70°, 60' = 70°, 70' = 56°, 80' = 70°, 90' = 60°.													
96	108	BLACK, STRIPED, QUARTZ - GRAPHITIC PHYLLITE													
		Minor pyrite, Good F2 folds.													
		Core Angle: 100' = 80°, 105' = 70°.													
108	190.5	GRAY, QUARTZ - SERICITE PHYLLITE													
		Local greenish tinge due to chlorite. F2 foliation dominant. Blebs of pyrrhotite, lesser pyrite throughout. White carbonate in veins and also in F1 laminae to lesser extent. Rock competent													
		Core Angle: 110' = 75°, 120' = 67°, 130' = 75°, 140' = 72°, 150' = 62°, 160' = 56°, 170' = 73°, 180' = 69°, 190' = 76°.	Recovery Good.												

DIAMOND DRILL RECORD

LOGGED BY S. B. Reamsbottom

PROPERTY

LATITUDE BEARING OF HOLE STARTED

DEPARTURE DIP OF HOLE COMPLETED

ELEVATION DIP TESTS DEPTH Proposed: Ultimate:

D.D.H. No. 75-A84 PAGE 2 of 12

CLAIM No.

N

DIRECTION AND DISTANCE FROM NE. CLAIM POST

FOOTAGE FROM	FOOTAGE TO	DESCRIPTION	Rec. Ft.	Sample No.	Footage From	Footage To	Sample Length	Assay Pb	Assay Zn	Assay Ag	Assay Au	Assay Cu	Assay x Feet Pb	Assay x Feet Zn	Assay x Feet Ag
190.5	224	GRADES TO PALE GREEN, CHLORITE - SERICITE - QUARTZ - CARBONATE PHYLLITE Striped and altered white (quartz-carbonate) - (chlorite-sericite) laminae (2-3 mm) Small-scale F2 fold noses. Good F2 foliation. Competent rock.		Recovery Good.											
		Core Angle: 200' = 80°, 210' = 72°, 220' = 80°.													
224	252	GRAY, SERICITE - QUARTZ - PHYLLITE With some carbonate in white laminae. F1 subvertical. Good F2. Minor blebs of pyrrhotite. Quartz-chlorite veins.	2.5/10		227	237									
		Core Angle: 230' = 82°, 240' = 75°, 250' = 71°.													
252	282	BLACK-DARK GRAY, QUARTZ - GRAPHITIC PHYLLITE Striped, alternate quartz and graphite micaceous laminae. Thin (0.5') band of white carbonate @ 257'. Zones of less graphitic phyllite and white sericite-quartz-phyllite @ 265-278'. Rock broken, muddy @ 267-273', 278-282'.	5/6		267	273									
			3/4		278	282									
		C.A. 260' = 76°, 270' = 82°, 280' = 75°													
282	327	ZONE OF ALTERED GRAY, QUARTZ - SERICITE PHYLLITE and WHITE QUARTZ - SERICITE PHYLLITE With thin zones of black graphitic phyllite. Note shear zone (?) of green mariposite quartz-sericite phyllite. Net veined by white quartz carbonate veins. Rock broken incompetent between 282-298', 305=316'. Possibly down dip from sulphide zone ???	0.8/1.5		292	293.5									
			4/5.5		293.5	298									

DIAMOND DRILL RECORD

LOGGED BY S. B. Reamsbottom

PROPERTY

LATITUDE BEARING OF HOLE STARTED

DEPARTURE DIP OF HOLE COMPLETED

ELEVATION DIP TESTS DEPTH Proposed: Ultimate:

D.D.H. No. 75-A84 PAGE 3 of 12

CLAIM No.

NN DIRECTION AND DISTANCE FROM NE. CLAIM POST

FOOTAGE FROM	FOOTAGE TO	DESCRIPTION	Rec. Ft.	Sample No.	Footage From	Footage To	Sample Length	Assay Pb	Assay Zn	Assay Ag	Assay Au	Assay Cu	Assay x Feet Pb	Assay x Feet Zn	Assay x Feet Ag
		Core Angle: 290' = 75°, 300' = 42°, F3 fold, 310' = 50°, 320' = 85°.													
327	372.5	PALE WHITE-GREENISH, SERICITE - CHLORITE PHYLLITE WITH ZONE OF GRAY QUARTZ - SERICITE PHYLLITE (carbonate veined) between 339-345'. Blebs and thin bands of pyrite, pyrrhotite in F2 foliation and in tension gashes. Quartz-chlorite veins. Good small-scale F2 folds. Competent rock. Core Angle: 330' = 75o, 340' = 70°, 350' = 75°, 360' = 72°, 370' = 75°.		Good Recovery.										
372.5	377	BLACK, STRIPED, QUARTZ - GRAPHITE PHYLLITE													
377	430	GRAY, QUARTZ - SERICITE PHYLLITE With thin zone of graphitic phyllite (389-392, 398-400') Rock broken 409-420'. Mud gouge - fault @ 423-424'. Core Angle: 380' = 70°, 390' = 65°, 400' = 76°, 410' = 71°, 420' = 65o, 430' = 85o, F2 folds, F1 subvertical.													

DIAMOND DRILL RECORD

LOGGED BY S. B. Reamsbottom

PROPERTY

LATITUDE BEARING OF HOLE STARTED

DEPARTURE DIP OF HOLE COMPLETED

ELEVATION DIP TESTS DEPTH Proposed: Ultimate:

D.D.H. No. 75-A84 PAGE 4 of 12

CLAIM No.

N

DIRECTION AND DISTANCE FROM NE. CLAIM POST

FOOTAGE FROM	FOOTAGE TO	DESCRIPTION	Rec. Ft.	Sample No.	Footage From	Footage To	Sample Length	Assay Pb	Assay Zn	Assay Ag	Assay Au	Assay Cu	Assay x Feet Pb	Assay x Feet Zn	Assay x Feet Ag
430	469	DARK GRAY, SERICITE - QUARTZ - CARBONATE - BIOTITE PHYLLITE													
		Greenish tinge so possible chlorite locally. Note white carbonate with quartz laminae. Excellent small-scale F2 folds. Good F2 foliations. Local F3 kinks subvertical -- white cc veins and blebs of pyrrhotite throughout. Locally graphitic: 464-468'.													
		Core Angle: 440' = 82°, 450' = 78°, 460' = 76°, 470' = 70°.													
469	488	PALE-CREAM-GREENISH, SERICITE - CHLORITE - QUARTZ - CARBONATE PHYLLITE with thin (0.5') graphite partings at 481'. Quite limey. White coarsegrained carbonate veins. Rock slightly bleached. Gouge @ 483-485'. Mariposite @ 486'.													
		Core Angle: 480' = 78°.													
488	503.5	SULPHIDE ZONE													
		Massive sulphide bands (2-8') within bleached sericite phyllite: pyrite, pyrrhotite, magnetite, lesser galena, sphalerite.													
		3-4% lead-zinc or less. Crystalline c.c. veins. Zone broken, incompetent rock.	2	2044	488	490	2	1.39	0.67	0.50					
		No. 2044 -- M. banded sulphide: 80% sulphide, 3% lead-zinc. No. 2045 -- as above: net veined by c.c. veins, Schist partings.	1.0		490	495		Rock broken, gougy. No lead-zinc.							
		Core Angle: 490' = 56°, 500' = 67°(?)	8	2045	495	503.5	8.5	1.58	1.50	0.59					

DIAMOND DRILL RECORD

LOGGED BY S. B. Reamsbottom

PROPERTY _____

LATITUDE _____ BEARING OF HOLE _____ STARTED _____

DEPARTURE _____ DIP OF HOLE _____ COMPLETED _____

ELEVATION _____ DIP TESTS _____ DEPTH Proposed: _____ Ultimate: _____

D.D.H. No. 75-A84 PAGE 5 of 12

CLAIM No. _____

N

DIRECTION AND DISTANCE FROM NE. CLAIM POST

FOOTAGE FROM	FOOTAGE TO	DESCRIPTION	Rec. Ft.	Sample No.	Sample Footage From	Sample Footage To	Sample Length	Assay Pb	Assay Zn	Assay Ag	Assay Au	Assay Cu	Assay x Feet Pb	Assay x Feet Zn	Assay x Feet Ag
503.5	520	BLEACHED PALE QUARTZ - SERICITE PHYLLITE Net veined with quartz-carbonate. Greenish where chlorite rich.		Good Recovery.											
		Core Angle: 510' = 60°, 520' = 67°.													
520	635	PALE GREEN, CHLORITE - SERICITE - QUARTZ - CARBONATE PHYLLITE Limey green phyllite cc in quartz laminae. Rock broken (525-537') but competent.		Good Recovery											
		Core Angle: 530' = 71°, 540' = 74°, 550' = 73°, 560' = 68°, 570' = 64°.													
		Rock becomes more competent, striped @ 550' onwards. Excellent F2 foliation. Quartz-cc veins. Pyrrhotite blebs with pressure shadows @ 612'.													
		Core Angle: 580' = 74°, 590' = 78°, 600' = 75°, 610' = 68°, 620' = 75°, 630' = 42°.													
635	655	BLACK GRAPHITIC PHYLLITE Quite phyllitic, less quartz. Irregular quartz-chlorite carbonate veins. F2 foliation dominant. Local F2 folds between foliation. Minor pyrite.		Good Recovery.											
		Core Angle: 640' = 65°, 650' = 62°.													

DIAMOND DRILL RECORD

LOGGED BY S. B. Reamsbottom

PROPERTY

LATITUDE BEARING OF HOLE STARTED

DEPARTURE DIP OF HOLE COMPLETED

ELEVATION DIP TESTS DEPTH Proposed: Ultimate:

D.D.H. No. 75-A84 PAGE 6 of 12

CLAIM No.

N

DIRECTION AND DISTANCE FROM NE. CLAIM POST

FOOTAGE FROM	FOOTAGE TO	DESCRIPTION	Rec. Ft.	Sample No.	Footage From	Footage To	Sample Length	Assay Pb	Assay Zn	Assay Ag	Assay Au	Assay Cu	Assay x Feet Pb	Assay x Feet Zn	Assay x Feet Ag
655	689	Grades to GRAY, QUARTZ - SERICITE PHYLLITE													
		Note fine-grained sphalerite-galena @ 657'. Rock broken @ 656-665; 673-684'.	2/3		657	660	3								
			10/11		673	684	11								
		Core Angle: 660' = 50°, 670' = 70°, 680' = 63°.													
689	707	ALTERATION ZONE													
		BLEACHED, GOUGED, CARBONATE-VEINED, GRAY, QUARTZ - SERICITE PHYLLITE	1/1.5		689	690.5		Gouge							
		Bleach zone above sulphide.	1.5/2		690.5	692.5		Gouge							
		Core Angle: 690' = 37°, fault?; 700' = 30°, F3 fold.	3.5/4		692.5	696.5									
707	719	SULPHIDE ZONE													
		Mainly massive pyrite, sphalerite with white barite. Pyrite, orange sphalerite, galena, lesser pyrrhotite + barite. 70%	4	2046	707	711	4	3.08	4.86	1.32			12.32	19.44	5.28
		sulphide: grade 10-15% lead-zinc in barite sections.	8	2047	711	719	8	5.63	8.88	2.68			45.04	71.04	21.44
		No. 2046 -- mineralized quartz-sericite phyllite; 30% sulphide: pyrite, pyrrhotite, sphalerite, lesser galena: 5-7% lead-zinc.		Wt. Av	707.0	719.0	12.0	4.78	7.54	2.23	(76.3)		57.36	90.48	26.72
		No. 2047 -- M.S. 70-75% sulphide + barite: pyrite, orange sphalerite, galena, barite; 15% lead-zinc. Some porous texture.													
		Core Angle: 710' = 55°, M.S.													

DIAMOND DRILL RECORD

LOGGED BY S. B. Reamsbottom

PROPERTY

LATITUDE BEARING OF HOLE STARTED

DEPARTURE DIP OF HOLE COMPLETED

ELEVATION DIP TESTS DEPTH Proposed: Ultimate:

D.D.H. No. 75-A84 PAGE 7 of 12

CLAIM No.

N

DIRECTION AND DISTANCE FROM NE. CLAIM POST

FOOTAGE FROM	FOOTAGE TO	DESCRIPTION	Rec. Ft.	Sample No.	Footage From	Footage To	Sample Length	Assay Pb	Assay Zn	Assay Ag	Assay Au	Assay Cu	Assay x Feet Pb	Assay x Feet Zn	Assay x Feet Ag
719	734	BLACK, STRIPED, QUARTZ - GRAPHITIC PHYLLITE Minor dissem. pyrite, sphalerite, galena for 2 feet after sulphide.													
		Core Angle: 720' = 52°, 730' = 80°.													
734	746	GRAY, QUARTZ - SERICITE PHYLLITE Good F2. Local incipient boudinage. Minor pyrite.													
		Core Angle: 740' = 72°.													
746	810	PALE GREEN, STRIPED, CHLORITE - SERICITE - QUARTZ - CARBONATE PHYLLITE Excellent F2 with F2 fold noses between foliation. White c.c. quartz laminae. Possible minor biotite. Competent rock.		Good Recovery.											
		Core Angle: 750' = 75°, 760' = 76°, 770' = 71°, 780' = 77°, 790' = 80°, 800' = 78°, 810' = 65°.													
810	831	PALE GRAY, SLIGHTLY BLEACHED, QUARTZ - SERICITE PHYLLITE Note cemented breccia with quartz and chlorite-sericite phyllite fragments @ 816-820'. Rehealed fault. F3 folds make core angles subvertical. Blebs of pyrrhotite.													
		Core Angle: 820' = 60°, 830' = 52°.													

DIAMOND DRILL RECORD

LOGGED BY S. B. Reamsbottom

PROPERTY

LATITUDE BEARING OF HOLE STARTED

DEPARTURE DIP OF HOLE COMPLETED

ELEVATION DIP TESTS DEPTH Proposed: Ultimate:

D.D.H. No. 75-A84 PAGE 8 of 12

CLAIM No.

N

DIRECTION AND DISTANCE FROM NE. CLAIM POST

FOOTAGE FROM	FOOTAGE TO	DESCRIPTION	Rec. Ft.	Sample No.	Footage From	Footage To	Sample Length	Assay Pb	Assay Zn	Assay Ag	Assay Au	Assay Cu	Assay x Feet Pb	Assay x Feet Zn	Assay x Feet Ag
831	850	SULPHIDE ZONE													
		Bands of massive pyrite, pyrrhotite, sulphide within mineralized quartz-graphitic phyllite.	4.3	2048	831	835.3	4.3	1.30	1.84	0.59			5.59	7.912	2.537
		Sulphide: Pyrite with lesser pyrrhotite, dark red sphalerite, galena, minor chlacopyrite, Grade: 10-15%.	4.1	2049	835.3 (839.4~	839.4 840.1)	4.1 (0.7	4.93	5.10	1.59			20.213 0.329	20.91 0.434	6.519 0.224
		Mineralized phyllite: fine-grained dissem. pyrite, pyrrhotite, with lesser sphalerite, galena in F2 foliation. 1-3% lead-zinc.	6.7	2050	839.4	846.1	6.7	0.47	0.62	0.32					
		No. 2048 -- mineralized phyllite, thin bands MS: 25-30% sulphide 4-6% lead-zinc	3.9	2051	846.1	850	3.9	1.38	1.08	0.71					
		No. 2049 -- M.S. banded, locally porous: 80% sulphide, 15% lead-zinc.													
		No. 2050 -- mineralized quartz-graphitic phyllite: 10% sulphide, 1-3% lead-zinc, chalcopyrite		Wt. Av.	831.0	840.1	9.1	2.87	3.21	1.02	(35.)		26.132	29.256	9.28
		No. 2051 -- M.S. and mineralized quartz-graphitic phyllite: pyrite pyrrhotite, lesser sphalerite, galena: 5-6% lead-zinc, 30-40% sulphide.													
		Note local small-scale sulphdie breccia recemented by sulphide. Also breccia with phyllite fragments in sulphide mix. Possible concentration of sulphide in F3 folds (?) also.													
		Core Angle: 840' = 67°, 850' = 58°.													
850	910	BLACK, STRIPED, QUARTZ - GRAPHITE PHYLLITE													
		Excellent F2 with F2 folds. Note F3 folding. F2 small-scale folds at 871'. Rock broken sporadically between 898-910'.													
		Core Angle: 860' = 70°, 870' = 65°, 880' = 84°, 900' = 71°, 910' = 55°.													

DIAMOND DRILL RECORD

LOGGED BY S. B. Reamsbottom

PROPERTY

LATITUDE BEARING OF HOLE STARTED

DEPARTURE DIP OF HOLE COMPLETED

ELEVATION DIP TESTS DEPTH Proposed: Ultimate:

D.D.H. No. 75-A84 PAGE 9 of 12

CLAIM No.

N

DIRECTION AND DISTANCE FROM NE. CLAIM POST

FOOTAGE FROM	FOOTAGE TO	DESCRIPTION	Rec. Ft.	Sample No.	Footage From	Footage To	Sample Length	Assay Pb	Assay Zn	Assay Ag	Assay Au	Assay Cu	Assay x Feet Pb	Assay x Feet Zn	Assay x Feet Ag
910	941	SULPHIDE ZONE													
		Massive pyritic sulphide bands in quartz-graphite and quartz-sericite (white) phyllites.	5	2052	910	915	5	1.18	1.02	0.59			11.0	Pb Zn	
		Sulphides layered; pyrite, pyrrhotite, magnetite, lesser galena, sphalerite, chalcopyrite. Note sericite rich gangue - fragments	7.5	2053	915	922.5	7.5	0.95	0.70	0.56			12.38	"	
		cemented by massive sulphides at 910-913': MS 70% sulphide, 4-6% lead-zinc.	5.0		922.5	927.5	—								
		No. 2052 -- bands of sulphide in sericite phyllite. Locally brecciated phyllite, 20-30% sulphide, 3-5% lead-zinc	5	2054	927.5	932.5	5.0	0.05	0.40	0.03			2.25	"	
		No. 2053 -- MS in white carbonate gangue, slivers of phyllite, 70% sulphide: pyrite, pyrrhotite, magnetite, chalcopyrite, sphalerite, galena; 3-5% lead-zinc.	5	2055	932.5	937.5	5.0	0.43	0.30	0.38			3.65	"	
		No. 2054 -- bands (1-3') sulphide in quartz-graphite phyllite. 20% sulphide, 1-3% lead-zinc	3.5	2056	937.5	941.0	3.5	0.12	0.07	0.21					
		No. 2055 -- sulphide in white quartz carbonate gangue: 40-50% sulphide, 3-5% lead-zinc		Wt. Av.	910.0	922.5	12.5	1.9	Pb Zn				23.4	Pb	
		No. 2056 -- as above		Wt. Av.	927.5	937.5	10.0	0.6	"				5.9	"	
		Core Angle: 920' = 80°, 930' = 65°, 940' = 67°.													
941	1013	Grades through 3' of graphite phyllite to GRAY, QUARTZ - SERICITE PHYLLITE													
		Good F2 foliation. Rock broken between 946-993'. Recovery quite good. Local quartz-chlorite veins. Minor pyrite. Network of quartz cc veins 998' onward.	5/6		953	959									
			8/9		959	968									
		Core Angle: 950' = 77°, 960' = 59°, 970' = 70°, 980' = 66°, 990' = 65°, 1000' = 72°, 1010' = 81°.			988	992		Rock sheared, gougy, probably fault							

DIAMOND DRILL RECORD

LOGGED BY S. B. Reamsbottom

PROPERTY

LATITUDE BEARING OF HOLE STARTED

DEPARTURE DIP OF HOLE COMPLETED

ELEVATION DIP TESTS DEPTH Proposed: Ultimate:

D.D.H. No. 75-A84 PAGE 10 of 12

CLAIM No.

N

DIRECTION AND DISTANCE FROM NE. CLAIM POST

FOOTAGE FROM	FOOTAGE TO	DESCRIPTION	Rec. Ft.	Sample No.	Footage From	Footage To	Sample Length	Assay Pb	Assay Zn	Assay Ag	Assay Au	Assay Cu	Assay x Feet Pb	Assay x Feet Zn	Assay x Feet Ag
1013	1307.5	BLACK, STRIPED, QUARTZ - GRAPHITIC PHYLLITE													
		Wispy fine-grained sphalerite, galena, pyrite in F1 and F2 laminae Chalcopyrite in tension fractures. Band of massive sulphide from 1045-1047.5'.			1013 @1024'	1017 —		Weak mineralized phyllite 0.5-1% lead-zinc Band (½") sphalerite							
		Pyrite, pyrrhotite, magnetite, sphalerite, lesser galena: chalcopyrite in gashes. Phyllite has blebs, stringers of pyrite, pyrrhotite throughout. More massive, less banded from 1050' on to 1157'. Quite striped from there on.	2.5	2057	1045	1047.5	2.5	3.53	2.46	1.18					
					1050	1054		Muddy, broken, gouge. ~ Fault ?							
		Core Angle: 1020' = 70°, 1030' = 74°, 1040' = 70°; 1050' = 43°, F3 fold ?, 1060' = 85°, 1070' = 65°, 1080' = 74°, 1090' = 65°.													
		Note rock is locally white quartz mottled appearance where quartz laminae have been completely transposed. Also circular graphite-cherty clasts from 1100' on. Abundant pyrrhotite, blebs also. Veins with crystalline cc and pyrite. Bands of less graphitic sericite phyllite 1183-1203'.		Excellent Recovery.											
		Core Angle: 1100' = 66°, 1110' = 75°, 1120' = 60°, 1130' = 74°, 1140' = 80°, 1150' = 67°, 1160' = 73°, 1170' = 63°, 1180' = 77°, 1190' = 70°, 1200' = 63°, 1210' = 67°, 1220' = 76°.													
		Note zones in white quartz laminae boudined or in which clasts or pyrite blebs have pressure shadows are probably on limbs of F2 folds - more extensional features on limbs!													
		Note from 1250-1307' fine-grained blebs and stringers of pyrite pyrrhotite and dark reddish sphalerite throughout section. Minor chalcopyrite in cross fractures. Rock extremely transposed. Local boudinage and clasts or pyrite crystals with pressure shadows. Subvertical fault zones with crumpled phyllite.													

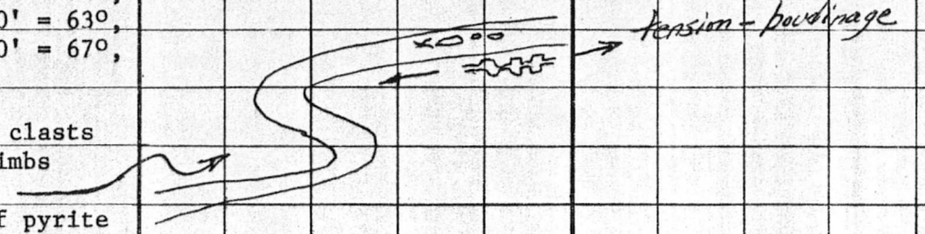

DIAMOND DRILL RECORD

LOGGED BY S. B. Reamsbottom

PROPERTY _____

D.D.H. No. 75-A84 PAGE 11 of 12

LATITUDE _____ BEARING OF HOLE _____ STARTED _____

CLAIM No. _____

DEPARTURE _____ DIP OF HOLE _____ COMPLETED _____

DIRECTION AND DISTANCE FROM NE. CLAIM POST

ELEVATION _____ DIP TESTS _____ DEPTH Proposed: Ultimate: _____

FOOTAGE FROM	FOOTAGE TO	DESCRIPTION	Rec. Ft.	Sample No.	Footage From	Footage To	Sample Length	Assay Pb	Assay Zn	Assay Ag	Assay Au	Assay Cu	Assay x Feet Pb	Assay x Feet Zn	Assay x Feet Ag
		Core Angle: 1230' = 75°, 1240' = 76°, 1250' = 48°, 1260' = 73°, pyrite with pressure shadows; 1270' = 67°, 1280' = 76°, 1290' = 73°, 1300' = 65°.													
1307.5	1373	MEDIUM GRAY, SERICITE - QUARTZ - PHYLLITE WITH MINOR CHLORITE AND BIOTITE (1330' onward) Local thin (0.25') zones with graphite. F2 dominant, F1 sub-vertical. Minor blebs of pyrrhotite, pyrite, possibly zinc at 1336'. Thin quartz veins with chlorite concentrations. 1330' - biotite isograd. Core Angle: 1310' = 75°, 1320' = 85°, 1330' = 82°. 1340' = 76°, F1 opp dip, 1350' = 89°, 1360' = 70°, 1370' = 84°.												
1373	1385.	DARK GRAY, STRIPED, QUARTZ - GRAPHITE PHYLLITE Blebs of pyrrhotite. Mud gouge @ 1383-1384'. Core Angle: 1380' = 55°.		Excellent Recovery.											
1385	1438	PALE GRAY, LOCALLY GREENISH, SERICITE - QUARTZ - PHYLLITE With minor chlorite and biotite. Rock phyllitic, F2 dominant. Chlorite-quartz veins. Blebs of pyrrhotite and pyrite. Note 1387-1391' -- chlorite carbonate-sericite rich phyllite -- soft and talcy.		Excellent Recovery.											

DIAMOND DRILL RECORD

LOGGED BY S. B. Reamsbottom

PROPERTY

LATITUDE BEARING OF HOLE STARTED

DEPARTURE DIP OF HOLE COMPLETED

ELEVATION DIP TESTS DEPTH Proposed: Ultimate:

D.D.H. No. 75-A84 PAGE 12 of 12

CLAIM No.

N

DIRECTION AND DISTANCE FROM NE. CLAIM POST

FOOTAGE FROM	FOOTAGE TO	DESCRIPTION	Rec. Ft.	Sample No.	Footage From	Footage To	Sample Length	Assay Pb	Assay Zn	Assay Ag	Assay Au	Assay Cu	Assay x Feet Pb	Assay x Feet Zn	Assay x Feet Ag
		Core Angle: 1390' = 77°, 1400' = 71°, 1410' = 70°, 1420' = 76°, 1430' = 69°.													
1438	1498	PALE GRAY, SERICITE - CHLORITE - BIOTITE - GARNET - PHYLLITE Note abundant brown biotite - folded by F2. Small pink garnets appear at 1438'. Therefore, GARNET ISOGRAD at 1438'. Core Angle: 1440' = 71°, 1450' = 81°, 1460' = 76°, 1470' = 76° 1480' = 68°, 1490' = 83°.													
	1498	END OF HOLE													
		REMARKS: 1. Drilled for fill-in, especially to investigate possible extension of A-10 ore section. Also to investigate possible lead-zinc mineralization extending from sulphide zone (1050'-1150') of A-60. 2. Hole cemented from button upwards, 25 sacks of cement used.													

Excellent Recovery.

DDH: FAGA084 --42 DEGREE PROFILE

(VIEW AZIMUTH = 312 DEGREES)

ELEV:1297 592129E ; 904984N

PLUNGE ANGLE IS 11.0 TREND ANGLE IS 312.0

CORRECTED COLLAR POSITION: X = 374.7 Z = 1297.5

SECTION NAME: 78W

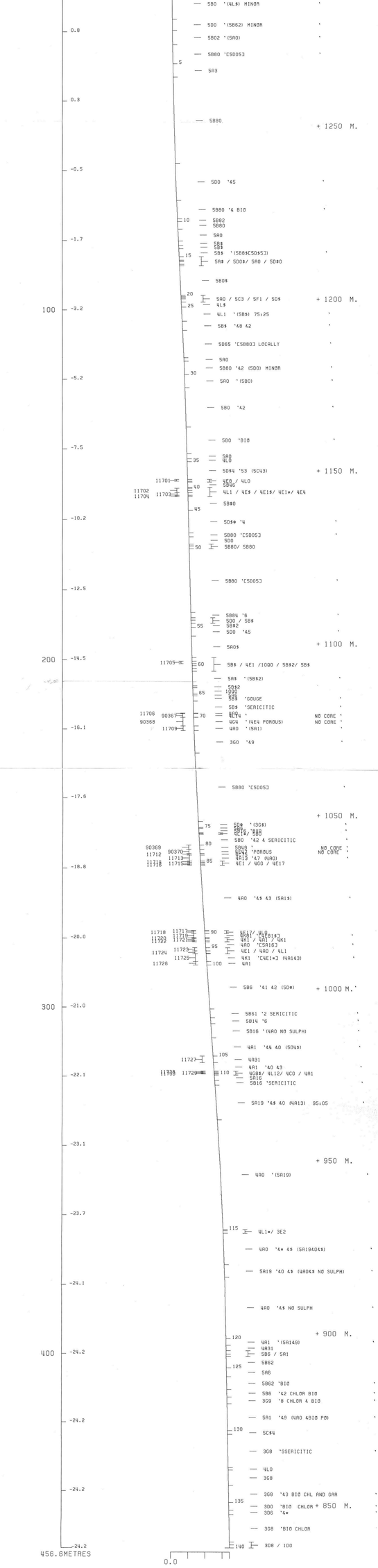

DDH: FAGA084 -- 42 DEGREE PROFILE

(VIEW AZIMUTH = 312 DEGREES)

ELEV:1297 592129E : 904984N

PLUNGE ANGLE IS 11.0 TREND ANGLE IS 312.0

CORRECTED COLLAR POSITION: X = 374.7 Z = 1297.5

SECTION NAME: 78W

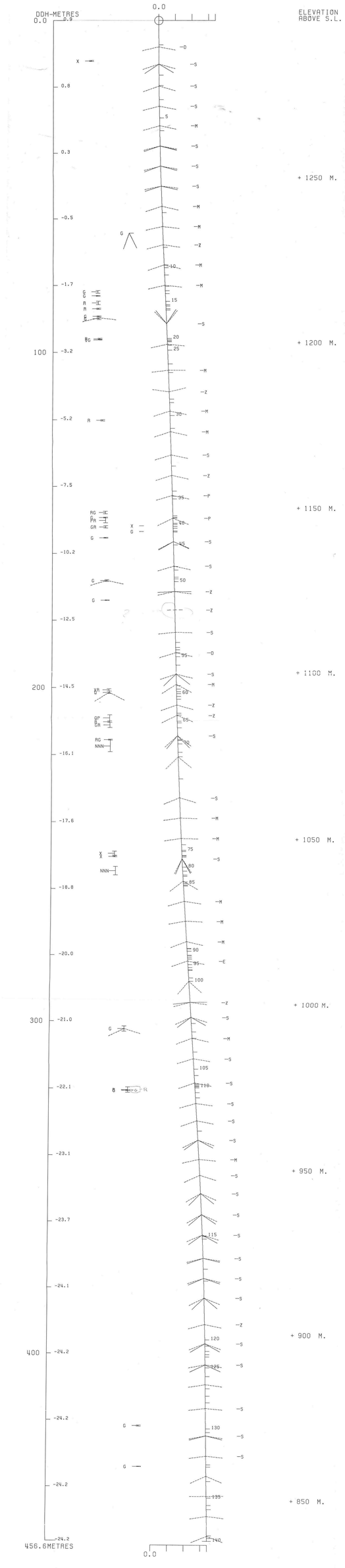

CYPRUS ANVIL MINING CORPORATION
PROGRAM DH161 11 DEC 1984 3:04 PM

FAGA158

DRILL HOLE : FAGA158
NORTHING : 905,184.5
EASTING : 592,315.7
ELEVATION : 1,302.0
TOTAL DEPTH : 135.6
SECTION : W 78
R.F.E. : S2
RFE DIRECTION: 230
PLUNGE ANGLE : 11
PLUNGE DIRECT: 312
DHD CALC: 1
SS CALC: 1

DETAIL RECORD COUNTS:

NOS ORE-SAMPLES:	19
NOS DOWN-H-SURVEYS:	2
NOS DOWN-H-LITHOLOGY:	75
NOS DOWN-H-STRUCTURE:	23
NOS DOWN-H-FAULTS:	18
NOS DOWN-H-SPLINES:	2
NOS COMPOSITES:	0

DDH: FAGA158 UTM-N: 905,184.5 UTM-E: 592,315.7 UTM-ELEV: 1,302.0 TOTAL DEPTH: 135.6 SECTION: W 78
RFE: S2 RFE DIR: 230 PLUNGE ANGLES: 11 312 DHD CALC: 1 SS CALC: 1

DEPTHS FROM	DEPTHS TO	SAMPLE NO.	INT.	REC.	ROCK UNIT	S.G. PULP	ASSAYS CU %	PB %	ZN %	AG(AA) G/MT	AG(FA) G/MT	AU(FA) G/MT	PO %	PY %	TOT FE	BAO %	HG %	MN %	AS %	BA %	S.G. W.R.
17.7	20.1	11921	2.4	1.4	4E4	4.28	.05	6.90	10.80	129.00		1.03	2	24	27						
20.1	23.2	11922	3.1	1.2	4D4	3.08	.02	3.00	5.79	54.00		.62	2	5	8						
49.4	51.6	11923	2.2	2.0	4DO	3.02	.01	2.20	5.50	49.00		.75	3	4	7						
51.6	53.5	11924	1.9	1.9	4DO	3.12	.02	2.60	6.50	53.00		.95	3	5	9						
67.5	68.5	11925	1.0	1.0	4DO	3.04	.01	2.50	6.90	51.00		.75	3	3	6						
69.0	71.0	11926	2.0	2.0	4DE	3.16	.02	1.97	6.00	40.00		.81	5	5	11						
91.2	94.1	11927	2.9	2.8	4AD	2.98	.02	2.10	4.79	39.00		.95	1	4	6						
96.5	99.0	11928	2.5	2.5	4AO	2.95	.01	.13	.33	3.99		.68	4	1	6						
99.0	101.8	11929	2.8	2.8	4A4	3.00	.02	2.20	4.50	43.00		.27	1	3	5						
103.2	105.1	11930	1.9	1.1	4E1	3.64	.02	1.29	4.29	27.99	22.00	.47	5	18	23						
105.1	106.6	11931	1.5	1.4	4A43	3.64	.02	1.03	4.40	28.99		.47	7	16	24						
110.8	113.0	11932	2.2	2.0	4H1	3.76	.17	4.59	6.00	92.00		.34	15	11	27						
113.0	114.7	11933	1.7	1.6	4AE	3.89	.22	7.49	12.19	158.00		.55	2	17	20						
115.8	117.2	11934	1.4	1.4	4A4	3.25	.02	2.20	3.70	42.00		.68	1	8	10						
118.3	119.8	11935	1.5	1.5	4A4	3.33	.04	3.29	5.40	52.00		1.03	2	9	12						
119.8	121.0	11936	1.2	1.2	4LO	3.56	.11	3.10	4.79	55.00		1.51	3	16	20						
121.0	123.3	11937	2.3	1.4	4AD	3.68	.08	4.29	8.40	83.00		1.43	5	14	20						
125.7	128.7	11938	3.0	2.4	4A4	3.41	.04	4.90	9.50	96.00		1.43	2	10	12						
128.7	131.6	11939	2.9	2.9	4A4	3.08	.02	1.88	4.40	28.99		.68	4	4	9						
WEIGHTED AVERAGE																					
17.7	23.2		5.5	2.6		3.60	.03	4.70	7.98	86.72		.79	2	13	16						
49.4	53.5		4.1	3.9		3.06	.01	2.38	5.96	50.85		.84	3	4	8						
67.5	68.5		1.0	1.0		3.04	.01	2.50	6.90	51.00		.75	3	3	6						
69.0	71.0		2.0	2.0		3.16	.02	1.97	6.00	40.00		.81	5	5	11						
91.2	94.1		2.9	2.8		2.98	.02	2.10	4.79	39.00		.95	1	4	6						
96.5	101.8		5.3	5.3		2.98	.02	1.22	2.53	24.60		.46	3	2	5						
103.2	106.6		3.4	2.5		3.64	.02	1.17	4.34	28.44	12.29	.47	6	17	24						
110.8	114.7		3.9	3.6		3.82	.19	5.86	8.70	120.76		.43	10	14	24						
115.8	117.2		1.4	1.4		3.25	.02	2.20	3.70	42.00		.68	1	8	10						
118.3	123.3		5.0	4.1		3.55	.07	3.71	6.63	66.98		1.33	3	13	17						
125.7	131.6		5.9	5.3		3.24	.03	3.42	6.99	63.06		1.07	3	7	11						

DDH: FAGA158 UTM-N: 905,184.5 UTM-E: 592,315.7 UTM-ELEV: 1,302.0 TOTAL DEPTH: 135.6 SECTION: W 78
RFE: S2 RFE DIR: 230 PLUNGE ANGLES: 11 312 DHD CALC: 1 SS CALC: 1

DEPTH	ZENITH	AZIMUTH
0.000	180.000	0.000
114.000	174.200	92.000

DDH: FAGA158 UTM-N: 905,184.5 UTM-E: 592,315.7 UTM-ELEV: 1,302.0 TOTAL DEPTH: 135.6 SECTION: W 78
RFE: S2 RFE DIR: 230 PLUNGE ANGLES: 11 312 DHD CALC: 1 SS CALC: 1

DEPTH	UNIT	CODE	DESC	RECOVERY	IND
17.7	0001	#		0.5-	1
20.1	0002	4E4	(4D4)	0.5-	1
23.2	0003	4D4	PHYLLITIC	0.5-	1
26.9	0004	5B62		0.5-	1
27.9	0005	5B@		0.5-	1
28.3	0006	5D4@		0.5-	1
34.3	0007	5B@		0.5-	1
34.7	0008	5B@	GOUGE	0.5-	1
35.8	0009	5B6	(5B@)	0.5-	1
40.0	0010	5B6	(5B@) GOUGE	0.5-	1
40.5	0011	5B@	(5D4@)	0.5-	1
41.0	0012	5B@	GOUGE	0.5-	1
42.1	0013	5B@		0.5-	1
43.0	0014	10Q0		0.5-	1
47.5	0015	5B@	(5B6)	0.5-	1
47.9	0016	5B6	GOUGE	0.5-	1
49.4	0017	4L02		0.5-	1
53.5	0018	4D0	PHYLLITIC [4L421]	0.5-	1
56.5	0019	4LC		0.5-	1
57.0	0020	5D4@		0.5-	1
57.3	0021	4LC		0.5-	1
57.5	0022	4LC	GOUGE	0.5-	1
58.1	0023	5B64		0.5-	1
59.1	0024	4LC	(5D4@)	0.5-	1
61.9	0025	5B@	$	0.5-	1
63.2	0026	5D@		0.5-	1
64.7	0027	5B@		0.5-	1
64.8	0028	5B@	GOUGE	0.5-	1
65.2	0029	5A1		0.5-	1
65.6	0030	5H0		0.5-	1
67.5	0031	5D@	MOTTLED	0.5-	1
68.5	0032	4D0	PHYLLITIC (4DC5)	0.5-	1
69.0	0033	5D4@		0.5-	1
69.6	0034	4D0	PHYLLITIC	0.5-	1
70.5	0035	4A14	--> (4D0)	0.5-	1
71.0	0036	4E0	BXA (4L2)	0.5-	1
71.7	0037	5D4@	(4L4)	0.5-	1
72.6	0038	5B@		0.5-	1
79.9	0039	5B@	GOUGE	0.5-	1
87.7	0040	5B$		0.5-	1
87.9	0041	5D4@		0.5-	1
88.2	0042	5B62		0.5-	1
89.5	0043	5B6	GOUGE	0.5-	1
91.0	0044	5B@		0.5-	1
91.2	0045	5D4@		0.5-	1
93.7	0046	4A41	BXA	0.5-	1
94.1	0047	4D0	PHYLLITIC (4L412)	0.5-	1
96.5	0048	5D4@		0.5-	1
101.4	0049	4A4	(4A0)	0.5-	1
101.8	0050	4L41	2 (4D0 PHYLLITIC)	0.5-	1
102.7	0051	5D4@		0.5-	1

DDH: FAGA158 UTM-N: 905,184.5 UTM-E: 592,315.7 UTM-ELEV: 1,302.0 TOTAL DEPTH: 135.6 SECTION: W 78
RFE: S2 RFE DIR: 230 PLUNGE ANGLES: 11 312 DHD CALC: 1 SS CALC: 1

DEPTH	UNIT	CODE	DESC	RECOVERY	IND
103.2	0052	4L41	[4DO PHYLLITIC]	0.5-	1
104.5	0053	4L27	BXA	0.5-	1
105.1	0054	4E1		0.5-	1
105.4	0055	5D4@		0.5-	1
106.6	0056	4A43	(4E5)	0.5-	1
108.6	0057	5D4@		0.5-	1
109.4	0058	4C0	PHYLLITIC	0.5-	1
110.8	0059	5D4@		0.5-	1
113.0	0060	4H1	BXA	0.5-	1
114.0	0061	4E4#	POROUS (4H0)	0.5-	1
114.3	0062	4L2	(5B* FUCHSITE)	0.5-	1
114.7	0063	4A0		0.5-	1
115.2	0064	4A0	GOUGE	0.5-	1
115.8	0065	5B61		0.5-	1
117.2	0066	4A4	PHYLLITIC	0.5-	1
118.3	0067	5B6	GOUGE	0.5-	1
119.8	0068	4A4		0.5-	1
121.0	0069	4L0	(4A0)	0.5-	1
122.5	0070	4D0	(4E0) (4L0)	0.5-	1
123.3	0071	4A43		0.5-	1
125.7	0072	5B62		0.5-	1
131.5	0073	4A4	(5D4@) 60:40	0.5-	1
131.6	0074	4A0	GOUGE	0.5-	1
135.6	0075	5B6	(10Q0)	0.5-	1

DDH: FAGA158 UTM-N: 905,184.5 UTM-E: 592,315.7 UTM-ELEV: 1,302.0 TOTAL DEPTH: 135.6 SECTION: W 78
RFE: S2 RFE DIR: 230 PLUNGE ANGLES: 11 312 DHD CALC: 1 SS CALC: 1

DDH	F DEPTH	T DEPTH	FEAT	SYMTRY	S0 ANGLE	S0 DIRECT	S1 ANGLE	S1 DIRECT	S2 ANGLE	S2 DIRECT	RFE CDE	DHDC	SDC	PROCESS
FAGA158	0.0	23.1	CS2	Z	0	0	30	180	70	230	0	1	1	1
FAGA158	0.0	30.1	CS2	Z	0	0	70	180	80	230	0	1	1	1
FAGA158	0.0	32.0	CS2	Z	0	0	60	180	70	230	0	1	1	1
FAGA158	0.0	41.4	CS2	Z	0	0	35	180	60	230	0	1	1	1
FAGA158	0.0	47.5	CS2	S	0	0	40	0	70	230	0	1	1	1
FAGA158	0.0	55.5	CS2	S	0	0	15	0	60	230	0	1	1	1
FAGA158	0.0	56.5	CS2	S	0	0	20	0	70	230	0	1	1	1
FAGA158	0.0	60.8	CS2	Z	0	0	35	180	75	230	0	1	1	1
FAGA158	0.0	65.0	CS2	S	0	0	20	0	70	230	0	1	1	1
FAGA158	0.0	72.2	CS2	S	0	0	0	0	50	230	0	1	1	1
FAGA158	0.0	82.3	CS2	S	0	0	25	0	75	230	0	1	1	1
FAGA158	0.0	87.0	CS2	Z	0	0	75	180	70	230	0	1	1	1
FAGA158	0.0	90.5	CS2	Z	0	0	0	0	60	230	0	1	1	1
FAGA158	0.0	94.8	CS2	S	0	0	10	0	65	230	0	1	1	1
FAGA158	0.0	98.0	CS2	S	0	0	20	0	60	230	0	1	1	1
FAGA158	0.0	99.1	CS2	Z	0	0	55	180	60	230	0	1	1	1
FAGA158	0.0	101.0	CS2	Z	0	0	20	180	65	230	0	1	1	1
FAGA158	0.0	107.9	CS2	D	0	0	0	0	70	230	0	1	1	1
FAGA158	0.0	113.6	PS2	P	0	0	0	0	45	230	0	1	1	1
FAGA158	0.0	119.5	PS2	P	0	0	0	0	80	230	0	1	1	1
FAGA158	0.0	123.5	CS2	S	0	0	40	0	70	230	0	1	1	1
FAGA158	0.0	130.8	CS2	S	0	0	0	0	80	230	0	1	1	1
FAGA158	0.0	135.4	CS2	Z	0	0	0	0	75	230	0	1	1	1

DDH: FAGA158 UTM-N: 905,184.5 UTM-E: 592,315.7 UTM-ELEV: 1,302.0 TOTAL DEPTH: 135.6 SECTION: W 78
RFE: S2 RFE DIR: 230 PLUNGE ANGLES: 11 312 DHD CALC: 1 SS CALC: 1

DDH	F DEPTH	T DEPTH	FEAT	REC CD	PARLL	UPPER PLANE		INTERNAL PLANE		LOWER PLANE		DHD
FAGA158	17.7	20.1	NP	8		0	0	0	0	0	0	1
FAGA158	23.2	26.9	QNP	0		0	0	0	0	0	0	1
FAGA158	34.3	34.7	G			0	0	0	0	0	0	1
FAGA158	35.8	40.0	G			0	0	99	999	0	0	1
FAGA158	40.5	41.0	G			0	0	0	0	99	999	1
FAGA158	43.0	47.5	B			0	0	0	0	0	0	1
FAGA158	47.5	47.9	G			0	0	0	0	0	0	1
FAGA158	57.3	57.5	G			99	999	0	0	99	999	1
FAGA158	64.7	64.8	G			0	0	99	999	0	0	1
FAGA158	70.5	71.0	X			0	0	0	0	0	0	1
FAGA158	72.9	79.9	G			99	999	0	0	99	999	1
FAGA158	88.2	89.5	G			99	999	0	0	99	999	1
FAGA158	91.2	93.7	QX			0	0	0	0	0	0	1
FAGA158	103.2	104.5	X			0	0	0	0	0	0	1
FAGA158	110.8	113.0	X			0	0	0	0	0	0	1
FAGA158	114.7	115.2	G			0	0	0	0	0	0	1
FAGA158	117.2	118.3	GB			0	0	0	0	0	0	1
FAGA158	131.5	131.6	G			0	0	99	999	0	0	1

DDH: FAGA158 UTM-N: 905,184.5 UTM-E: 592,315.7 UTM-ELEV: 1,302.0 TOTAL DEPTH: 135.6 SECTION: W 78
RFE: S2 RFE DIR: 230 PLUNGE ANGLES: 11 312 DHD CALC: 1 SS CALC: 1

DDH	SEGMENT NOS	COND INDICATOR
FAGA158	1	2
FAGA158	2	1

CYPRUS ANVIL MINING CORPORATION

DIAMOND DRILL CORE LOG

Date: 20 SEP 81

Hole Number: FAGA 158.

Project: GRUM RELOG.

Location: 78 W.

Claim:

U.T.M.
~~Terr.~~Plane
Co-ords.: 905184.5 N

1979 HEW Survey
592315.7 E

Grid
Co-ords:

Elevation: 1302.0m

Reference Fabric Orientation Diagram:

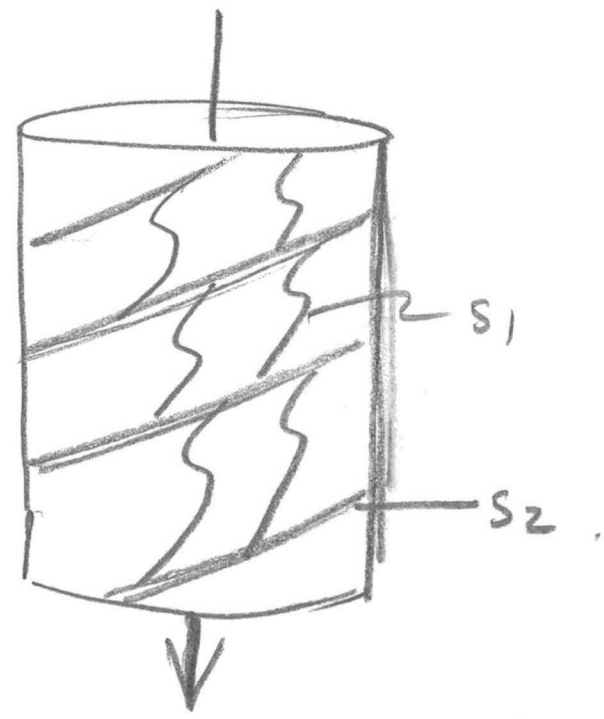

All symmetry determinations looking

NW with S2 dipping

Total Depth: 135.6 m.

SW with dip azimuth 230.

Purpose: GRUM. S/P.

Reason hole
Terminated:

Logged by: DSJ - JGS

Date(s) Logged: 20 SEP 81

Drilling
Contractor: Cameron McCutcheon

Size	CORE From	To
BQ	0	135.6

Collar Cased and Capped: ____

Hole
Cemented:

Steel down
hole:

Started: 16 SEP 76 Completed: 16 SEP 76

Cyprus Anvil Mining Corp.

DDH FAGA158

Diamond Drill Core Log Date: 20SEP81 Logged By: DSJ-JGS

Code	Drillhole	Elevation	Northing	Easting	Units (feet/metres)	R.F.E.	
1	2 8	10 16	17 24	25 32	34 39	41 42	
T	FAGA158	1302.0	9951845.5	592315.7	METRES	52	

Code	Drillhole	Depth	Zenith Angle	True Azimuth	Comments
1	2 8	10 14	22 26	28 32	34 56
R	FAGA158	0	180.0	0.0	AT COLLAR
R	FAGA158	114	174.2	92.0	SPERRY MAG

Code	Drillhole	Comments, Errant Remarks, Snivellings and / or Lewd Suggestions
1	2 8	10 56

DDH FAGA158 (2 — 8)

Cyprus Anvil Mining Corp.

Lithologic Log

Date: 20 SEP81 Logged By: DSJ - JGS

Code	From	To	Recov.	No.	Unit	Description
1	10 — 14	16 — 20	22 — 24	26 — 28	30 — 34	35
L	000	177		01	*	NO CORE. O/B
L	177	201		02	4E4	(404) < 2m CORE REC
L	201	232		03	4D4	Nom Py (PHYLL)
L	232	269		04	5B62	F QV.O < .3m REC ? LITH
L	269	279		05	5B*	ANK
L	279	283		06	5D4*	ANK NIL touch.
L	283	343		07	5B*	ANK.
L	343	347		08	5B*	GOUGE NIL ATT
L	347	358		09	5B6	(5B* ANK)
L	358	400		10	5B6	(5B* ANK) GOUGE F 11 Sz ? THRUST.
L	400	405		11	5B*	ANK. (5D4 ANK)
L	405	410		12	5B*	ANK GOUGE F o/c ind L/c 11 Sz
L	410	421		13	5B*	ANK.
L	421	430		14	10Q0	
L	430	475		15	5B*	(5B6) ANK. BKN CORE.
L	475	479		16	5B6	GOUGE NIL ATT
L	479	494		17	4L02	
L	494	535		18	4D0	PHYLL [4L4 Z1]
L	535	565		19	4L0	
L	565	570		20	5D4*	ANK nil touch.
L	570	573		21	4L0	
L	573	575		22	4L0	GOUGE U/C 11 Sz
L	575	581		23	5B64	
L	581	591		24	4L0	(5D4*ANK) minor QQD
L	591	619		25	5B*	ANK / DOL
L	619	632		26	5D*	ANK
L	632	647		27	5B*	ANK.
L	647	648		28	5B*	GOUGE 11 Sz
L	648	652		29	5A1	
L	652	656		30	5H0	
L	656	675		31	5D*	ANK. mottled
L	675	685		32	4D0	PHYLL (4D85)
L	685	690		33	5D4*	ANK FOSM 2-5%
L	690	696		34	4D0	PHYLL
L	696	705		35	4A14	→ to (40)
L	705	710		36	4F0	Δ BRECC (4L2)

DDH FAGA158 (2–8)

Cyprus Anvil Mining Corp.

Lithologic Log

Page 4 of 7

Date: 20 SEP 81 Logged By: DJ – JGS

Code	From	To	Recov.	No.	Unit	Description
1	10–14	16–20	22–24	26–28	30–34	35
L	710	717		37	5D4*	ANK. (4L4)
L	717	726		38	5B*	ANK
L	726	799		39	5B*	GOUGE. u/c mod l/c 11 sz DOLT LAKE DET.
L	799	877		40	5B*	DOL ?
L	877	879		41	5D4*	NIL FUSCH ANK
L	879	882		42	5B62	
L	882	895		43	5B6	GOUGE. u/c 11 sz l/c 11 sz ? ART.
L	895	910		44	5B*	ANK.
L	910	912		45	5D4*	ANK 1% fusch.
L	912	937		46	4A41	QV. & BRECCIA
L	937	941		47	4D0	PHYLL (4L412)
L	941	965		48	5D4*	ANK. >5% fusch.
L	965	1014		49	4A4	(4A0) see assays
L	1014	1018		50	4L41	/2 (4D0 PHYLL)
L	1018	1027		51	5D4*	ANK. 5% fusch.
L	1027	1032		52	4L41	[4D0 PHYLL]
L	1032	1045		53	4L27	Δ BRECC. 5D4* + -4L2 frags in Po Py matrix
L	1045	1051		54	4E1	
L	1051	1054		55	5D4*	ANK 2-5% fusch.
L	1054	1066		56	4A43	(4E5)
L	1066	1086		57	5D4*	ANK 5% fusch.
L	1086	1094		58	4C0	PHYLL
L	1094	1108		59	5D4*	ANK fusch. 5D4* from 5D*
L	1108	1130		60	4H1	Δ qtz frgs 4H matrix
L	1130	1140		61	4E4*	POR. (4H0) calcareous.
L	1140	1143		62	4L2	(5B* fusch)
L	1143	1147		63	4A0	
L	1147	1152		64	4A0	GOUGE NIL ATT.
L	1152	1158		65	5B61	
L	1158	1172		66	4A04	(PHYLL) see assays
L	1172	1183		67	5B6	GOUGE BKN CORE ? F NIL ATT.
L	1183	1198		68	4A4	
L	1198	1210		69	4L0	(4A0)
L	1210	1225		70	4D0	(4E0) (4L0)
L	1225	1233		71	4A43	
L	1233	1257		72	5B62	

DDH FAGA158 (2 — 8)

Cyprus Anvil Mining Corp.

Lithologic Log

Date: 20 SEP 81 Logged By: DSJ - JGS.

Code	From	To	Recov.	No.	Unit	Description
1	10 — 14	16 — 20	22 — 24	26 — 28	30 — 34	35
L	112.5 — 117	113.1 — 115		73	4A0/4	see assays (5D4* ANK) ± fusch. 60% 4A 40% 5D.
L	113.1 — 115	113.1 — 116		74	4A0	GOUGE 11 Sz F.
L	113.1 — 116	113.5 — 116		75	5B6	(1000) 132.3, 133.1.
L				7		END OF HOLE.

DDH FAGA158 (2 8)

Cyprus Anvil Mining Corp.

Structural Log

Page 6 of 7

Date: 20 SEP 81 Logged By: DSJ - JGS

Code	From	To	Feature	Sym	S_0 Dip	S_0 Direct.	S_1 Dip	S_1 Direct.	S_2 Dip	S_2 Direct	Description
1	10 14	16 20	22 24	26	28	32	34	38	40	44	
S		231	CS2	Z			30	050	70	230	
S		301	CS2	Z			70	050	80	230	
S		320	CS2	Z			60	050	70	230	
S		414	CS2	Z			35	050	60	230	
S		475	CS2	S			40	230	70	230	
S		555	CS2	S			15	230	60	230	
S		565	CS2	S			20	230	70	230	
S		608	CS2	Z			35	050	75	230	
S		650	CS2	S			20	230	70	230	
S		722	CS2	S					50	230	
S		823	CS2	S			25	230	75	230	
S		870	CS2	Z			75	050	70	230	
S		905	CS2	Z					60	230	
S		948	CS2	S			10	230	65	230	
S		980	CS2	S			20	230	60	230	
S		991	CS2	Z			55	050	60	230	
S		1010	CS2	Z			20	050	65	230	
S		1079	CS2	D					70	230	
S		1136		R					45	230	
S		1195		R					80	230	
S		1235	CS2	S			40	230	70	230	
S		1308	CS2	S					80	230	
S		1354	CS2	Z					75	230	
											E of H.

DDH FAGA158 (2 … 8) Cyprus Anvil Mining Corp

Logged by DSJ - JGS

ASSAY LOG (SAMPLER'S COPY) Date 20 SEP 81 Sampled by

CODE	FROM	TO	SAMPLE	INTR.	REC (m)	UNIT	DESCRIPTION
1	10 … 14	16 … 20	22 … 26	28 … 30	32 … 34	36 … 40	42
P	177	201	119211	24	14	4E4	
P	201	232	119222	31	12	4D4	
P	494	516	119233	22	20	4D0	[4L4]
P	516	535	119244	19	19	4D0	(4L4)
P	675	685	119255	10	10	4D0	
		690					NOT SAMPLED. 5P4 *
P	690	710	119266	20	28	4E0	
P	912	941	119277	29	28	4A4	(4D0)
P	965	990	119288	25	25	4A4	
P	990	1018	119299	28	28	4A4	last 4m 4L4.
P	11032	11051	119310	19	11	4E1	(4L2/7)
P	11051	11066	119311	15	14	4A4	(5P4* .4m)
P	11108	11130	119322	22	20	4M1	
P	11130	11147	119333	17	16	4A0	5P4
P	11158	11172	119344	14	14	4A0	
							FAULT
P	11183	11198	119355	15	15	4A4	
P	11198	11210	119366	12	12	4A0	
P	11210	11233	119377	23	14	400	(4M4/3)
P	12157	12287	119388	30	24	4A0	
P	12287	13116	119399	29	29	4A0	
							E.O.H.

METERS!

FAULT

DDH FAGA158 (2 / 8)

Cyprus Anvil Mining Corp.

Structural Log

Page _____ of _____

Date: _____ Logged By: _____

Code	From	To	Feature	Sym	S_0 Dip Direct.	S_1 Dip Direct.	S_2 Dip Direct	Description
1	10 14	16 20	22 24	26	28 32	34 38	40 44	
F	1177	1210	NP	8				80% recovery - no reason given
F	1232	1269	QNP	0				8% recovery, qtz vein
F	1343	1347	G					IND gouge
F	1358	1400	G			999 9999		Fault $\parallel S_2$
F	1405	1410	G				999 9999	gouge, u. cnt IND, l. cnt $\parallel S_2$
F	1430	1475	B					broken core
F	1475	1479	G					IND gouge
F	1573	1575	G		999 9999		999 9999	up & low cnt $\parallel S_2$
F	1647	1648	G			999 9999		gouge $\parallel S_2$
F	1705	1710	X					bxa
F	1729	1799	G		999 9999		999 9999	upper & lower cnt $\parallel S_2$
								Deal Lake Det.
F	1882	1895	G		999 9999		999 9999	gouge, both contacts $\parallel S_2$
F	1912	1937	QX					qtz vein & bxa
F	11032	11045	X					bxa 50% - 4% frags in Po-Py matrix
F	11108	11130	X					bxa - qtz frags in 4% matrix
F	11147	11152	G					IND
F	11172	11183	GB					IND gouge & broken core
F	11315	11316	G			999 9999		gouge $\parallel S_2$

Calcn. checked Dec 4/76 JE — Calculations ✓

DIAMOND DRILL RECORD

LOGGED BY D. Sloan — D.D.H. Nº 76-A158 — PAGE 1 of 9

PROPERTY GRUM JOINT VENTURE, Y.T.

	CO-ORDS	GRID		
LATITUDE	10,977.56	9W	STARTED	Sept. 16/76 D.S.
DEPARTURE	7,627.69	78W	COMPLETED	Sept. 18/76 D.S.
ELEVATION	1312.59	Surface	PROPOSED DEPTH	134'
			ULTIMATE DEPTH	135.6'

HOLE SURVEY:

DEPTH	BEARING	DIP
Collar		-89°
374'(114")	090°	-84.5°

CLAIM Nº

N

DIRECTION AND DISTANCE FROM N.E. CLAIM POST

Interval (M) From	To	DESCRIPTION	Recovery	Sample Nº	Interval From	To	Sample Length	Assay Pb	Zn	Ag	Au	Cu	Assay x Meters Pb	Zn	Ag
0	17.7	OVERBURDEN - Triconed to 17.7'	N.R. / 17.7		0	17.7									
17.7	20.1(?)	MASSIVE SULPHIDES (M)													
		No Overburden material cored. The first 18 cm of core recovered consists of tumbled pebbles of Blz-Sulphs + Massive Sulphides — no oxidation.	py 45 PZ 22	0.57	A 526B	17.7	18.6	0.9	7.69	9.08	150.17			6.92	8.17	135.15
			py 40 PZ 28	0.62	527B		20.1	1.5	7.51	13.33	118.97			11.27	20.00	178.46
		18.2 - 20.1': Less than 1% rusty fractures.														
		Av. 40 py, 26 PZ. Recovery very low from 18.6-20.1'.														
		C.A. 20-30°.														
20.1(?)	23.8(?)	QUARTZ-SULPHIDES (P)				(20.1	20.7	0.6)						(2.06	3.59	32.09)
		85-90% qtz, 2 py, 6 PZ, banded sulphides. 0.1% rusty fracture.		0.74	A 528B	20.1	21.3	1.2	8.43	5.99	53.49			4.12	7.19	64.19
		C.A. 20-25°		0.25	529B		23.8	2.5	2.60	6.20	52.46			6.50	15.50	131.15
					Wt Av	17.7	20.7	3.0	6.75	10.39	115.2			20.25	31.76	345.70
					WT. Av. -	17.7	20.1	2.4	4.58	11.74	130.67			18.19	28.17	313.61
					"	20.1	23.8	3.7	2.87	6.13	52.79			10.62	22.69	195.34
23.8(?)	26.5(?)	FAULT			"	17.7	23.8	6.1	4.72	8.34	83.43			28.81	50.86	508.95
		No recovery, drills rods dropped down readily. Note return water thin milky white.	N.R. / 26.5			23.8	26.5									

LOGGED BY [signature] D.D.H. Nº 76-A158 PAGE 2 of 9

Interval From	Interval To	DESCRIPTION	Recovery	Sample Nº	Interval From	Interval To	Sample Length	Assay Pb	Assay Zn	Assay Ag	Assay Au	Assay Cu	Assay x Pb	Assay x Zn	Assay x Ag
26.5	34.0	QTZ-SER PHY (S) Med Gray.													
		60% qtz. 3mm qtzose banding, v. fissile, cored	4/7.5		26.5	34.0									
		as poker chips.													
		C.A. F2 = 85°. F1 local, poor forms.													
34.0	49.4	FAULT & SHEAR ZONES in Qtz-Ser + Qtz-Ser-Graph Phy.													
		This section contains multiple faults + shears - entire	2.4/3.5		34.0	37.5									
		area "rotten". Approx. 5% of the rocks show no disturbance.	1.5/1.5			39.0									
		Main faults are: 34.3-34.6m, 35.9-36.3,	0.9/1.5			40.5									
		37.5-38, 39.1-40, 40.5-41m, 47.5-48m.	2.4/2.8			43.3									
		C.A. 70-60 to 39m, 85° @ 40.2, 70° @ 41.3, 60° @ 43,	1.2/2.7			46.0									
		55° @ 45.5-47.	1.3/1.5			47.5									
			0.55/0.7			48.2									
			0.3/1.2			49.4									
49.4	53.5	QTZ-SULPHS													
		Massive, v. siliceous, 85% qtz, 3py, 7PZ.	1.8	A 530B	49.4	51.4	2.0	1.80	4.50	32.23			3.60	9.00	64.46
		C.A. 45° @ 49.4m (F1?), 40° @ 50.4 (F1?)	1.9	531B		53.5	2.1	2.58	5.69	44.23			5.42	11.95	92.88
		F2 = 90° @ 51.2, 60-65° @ 51.5m (F1 also noses),													
		F1(?) 40° @ 51.8. F2 = 70° @ 52.4-53.2m.		WT.AV.	49.4	53.5	4.1	2.20	5.11	38.38			9.02	20.95	15.7.34
53.5	59.1	QTZ-SER PHY (Sb + S) Bleached Buff + Light Gray													
		Mixed intervals of buff + light gray phyllites	2.2/2.3		53.5	55.8									

LOGGED BY F. Chow D.D.H. Nº 76-A158 PAGE 3 of 9

Interval From	Interval To	DESCRIPTION	Recovery	Sample Nº	Interval From	Interval To	Sample Length	Assay Pb	Assay Zn	Assay Ag	Assay Au	Assay Cu	Assay x Pb	Assay x Zn	Assay x Ag
		53.5 - 55.7' and 57.2 - 57.4' : multiple shearing	3.1/3.3		55.8	59.1									
		with gouge parts.													
		C.A. 70-75° F_2. F_1 subp. to F_2 @ 55.3'.													
59.1	61.9	QTZ - Ser Phy (S) Med. Grey													
		55% qtz, minor calcite as fracture filling w/ qtz +	2.5/2.8		59.1	61.9									
		ankerite. Rock highly sheared, also fractured w/ many													
		tension cracks.													
		C.A. 65° F_2. F_1 good to poor, 60-90° to F_2.													
61.9	65.6	QTZ-Ser PHY Light Pale Gray													
		Thinly laminated, also massive pale gray phy.	3.3/3.3		61.9	65.2									
		Upper contact sharp, lower contact in sharp contact //	0.3/	A 5328		65.5	0.3	4.58	11.42	87.77	✓				
		w/ F_2 w/ graphitic phy. then in turn in contact w/ massive													
		pyrrho with 8% (?) PZ, 05 Po.													
		C.A. F_2 = 80°@ 62', 55°@ 63, 65°@ 63.4,													
		70°@ 64-64.5'. 60° comp. banding in sulphs.													
		F_1 local, poor.													
65.6	67.5	QTZ - TALC - CHLORITE													
		White w/ green leaves, blobs + bands 20% chlorite.	2/2.0		65.5	67.5									
		Massive, soft but firm.													

LOGGED BY _____ D.D.H. Nº 76-A15B PAGE 4 of 9

Interval From	Interval To	DESCRIPTION	Py	Pz	Recovery	Sample Nº	Interval From	Interval To	Sample Length	Assay Pb	Assay Zn	Assay Ag	Assay Au	Assay Cu	Assay x Pb	Assay x Zn	Assay x Ag
		C.A. 25° @ 65.9m, 70° @ 66.7 - 67.5m. (F_2?)															
67.5	71.0	QUARTZ-SULPHS (P) & TALC-CHL (TK)															
		67.5-68.5m: Siliceous, hard, 0.5py, 4.5Pz. (P)	0.5	4.5	1.0	A 533B	67.5	68.5	1.0	2.50	6.24	46.29	✓		2.50	6.24	46.29
		-69.0 : Talc-Chl, (TK)	0	0	0.5/0.5			69.0									
		-69.6 : Siliceous, hard, 0.5py, 2Pz (P)	2.5	4.5	1.5	5 B		70.5	1.5	2.68	2.96	48.34	✓		4.02	4.44	72.51
		-70.2 : siliceous, " , 4py, 6.5Pz, 1graph (P_a)	10	2	0.5	535B		71.0	0.5	2.30	7.45	36.34	✓		1.15	3.73	18.17
		-71.0 : brecciated Qtz Sulphs, 10py, 2Pz.															
		C.A. 45° (F_2?)				WC-AV.	67.5	71.0	3.5	2.19	4.12	39.1			7.67	14.41	136.97
71.0	71.7	QTZ-SER PHY (SB) Bleached Buff.															
		F_2(?) fold nose, splash of Py, Pz.			0.7/0.7		71.0	71.7									
71.7	72.8	QTZ-GRAPH PHY (G)															
		Phy sheared 15° by fault below. 5cm of Py, Pz @			0.9/1.1		71.7	72.8									
		72.6m.															
		C.A. F_2 = 45°. F_1 = 90° to F_2.															
72.8	80.3	FAULT & SHEAR ZONE in Qtz-Ser Phy (S)															
		Rock 80% sheared, crushed & partly brecciated. Gouge & breccia			1.9/2.5		72.8	75.3									
		@ 73.1 - 73.8 & 78.8 - 79.8m.			1.3/1.8			77.1									
		C.A. 60° @ 73.3m, 20° @ 73.8-74.4, 0° @ 74.4-75.3,			2.5/3.2			80.3									

LOGGED BY [signature] D.D.H. Nº 76-A158 PAGE 5 of 9

Interval From	Interval To	DESCRIPTION	Recovery	Sample Nº	Interval From	Interval To	Sample Length	Assay Pb	Assay Zn	Assay Ag	Assay Au	Assay Cu	Assay x Pb	Assay x Zn	Assay x Ag
		0°-20-0° @ 76.5-79m, 70° @ 80m.													
80.3	91.2	QTZ-SER PHY (S) Med Gray.													
		60-65% qtz. Banded, well foliated, fissile.	7.1/7.3		80.3	87.6									
		Many qtz veinlets. Slips common.	1.4/1.9			89.5									
		Two or more narrow shears per meter of core, generally	1.7/1.7			91.2									
		follow F2 plane, often gougey. Larger shears or faults @													
		84.4-85m and 88.5-89.5m, the latter mainly gouge.													
		C.A. F2 = 65° @ 81.3m, F2 nose @ 80.5, 75° @ 81-84m,													
		65° @ 84.2, 35° @ 85.5, F2 nose @ 85.6,													
		65° @ 86-88.5, 70° @ 90, 55° @ 90.5, 75° @ 90.6m.													
		F1 = sub v to F2, good to poor, local.													
91.2	94.2	QTZ-SULPH-GRAPH (Pg)													
		75% qtz, 7 py, 6 PZ. Siliceous & hard. Brecciated	1.5	A 5368	91.2	92.7	1.5	2.53	4.70	37.37			3.80	7.05	56.06
		@ 92-92.7m & well healed, also @ 92.9-93.2; both show	1.5	5378		94.2	1.5	2.20	4.45	36.34			3.30	6.68	54.51
		lower sulphides. 93.7-97.2m - 2% ser, no graphite.													
		F2 mineralization.		WT AV.	91.2	94.2	3.0	2.37	4.58	36.86			7.10	13.73	110.57
		C.A. F2 = 40° @ 91.2m, 30° @ 92.8, 40° @ 93.4-94m.		" "	91.2	94.9	3.7	1.92	3.71	29.9					
		F1 = 80° to F2 @ 92m.													
		Upper contact @ 40° ∥ F2, lower contact a tight slip													
		@ 85° to F2 (45° to core).													

LOGGED BY _____ D.D.H. NO 76-A158 PAGE 6 of 9

Interval From	Interval To	DESCRIPTION	Recovery	Sample NO	Interval From	Interval To	Sample Length	Assay Pb	Assay Zn	Assay Ag	Assay Au	Assay Cu	Assay x Pb	Assay x Zn	Assay x Ag
94.2	96.5	QTZ - SER - TALC - MARIPOSITE (Sbr).													
		White w/ foliations of buff sericite & bright green	2.3/2.3		94.2	96.5									
		mariposite. 55-60% qtz, 10 talc, 4 mariposite, negli													
		py, PZ. Massive & firm.													
		C.A. F_2 @ 40°. F_1 = 80° to F_2 @ 94.4'.													
96.5	104.0	QTZ - SULPHS - GRAPH (Py)(Pz)	Py / Pz												
		As 91.2 - 94.2'.	5 / 6	1.5	A 538 B	96.5	98.0	1.5	2.55	5.65	43.54	✓	-	3.83	8.48	65.31
		96.5 - 97.2' : Qtz-Ser-Sulphs, 4py, 3.5 PZ.	5 / 5.5	1.5	539 B		99.5	1.5	1.95	3.83	30.17	✓	-	2.93	5.75	45.26
		-101.3 : " -Graph- ", 5py, 6.5 PZ.	4 / 5.5	1.5	540 B		101.0	1.5	2.10	4.43	36.34			3.15	6.65	54.51
		101.8 : " -Ser- ", 3py, 3 PZ.	3 / 4	0.8	541 B		101.8	0.8	2.48	4.68	38.40			1.98	3.74	30.72
		102.7 : Qtz-Ser-Talc(5%)-Mariposite(7%),	0 / 0	0.9/0.9			102.7									
		103.2 : Qtz-Ser-Sulph, 1 py, 2.5 PZ.	1 / 2.5	0.5	542 B		103.2	0.5	1.93	3.90	25.37			✓ 0.97	1.95	12.69
		104.0 : Qtz-Ser-Mariposite-Talc (as above)	0 / 0	0.8/0.8			104.0									
		C.A. F_2 = 50° uniform. F_1 = 80-90° to F_2, excellent forms.														
					WT. AV.	99.5	101.8	2.3	2.23	4.52	37.06			5.13	10.39	85.23
104.0	106.7	MASSIVE SULPHS + QTZ-SER-TALC-MARIPOSITE (St)			WT. AV.	96.5	101.8	5.3	2.24	4.65	36.94	✓		11.89	24.62	195.80
		Banded massive sulphs w/ ser; graph in minor	30 / 4	2.6	A 543 B	104.0	106.7	2.7	1.25	4.05	23.31			✓ 3.38	10.94	62.94
		amounts intermittently. 105.1 - 105.5': (St mariposite)(Barren)														
		C.A. 70-75°.			WT. AV.	102.7	106.7	4.0	1.09	3.22	18.91			4.35	12.89	75.63

LOGGED BY F. Chow D.D.H. Nº 76-A158 PAGE 7 of 9

Interval From	Interval To	DESCRIPTION	Py	Po	PZ	Recovery	Sample Nº	Interval From	Interval To	Sample Length	Assay Pb	Assay Zn	Assay Ag	Assay Au	Assay Cu	Assay x Pb	Assay x Zn	Assay x Ag
106.7	110.6	TALC + CHLORITE — MARIPOSITE																
		Green foliations upon white. Massive, soft.				3.9/3.9		106.7	110.6									
		50%(?) talc, 30(?) chl, mariposite locally @ 106.8 - 107.1',																
		108.4 - 108.6 and @ 110.6'.																
		108.6 - 109.4' : Qtz - Sulph - Ser, 12 py, trace Z.																
		C.A. F_2 = 70°. F_1 = 60° to F_2, fair.																
110.6	114.0	QTZ - SULPH - SER and MASS. SULPHS. (P+M)	1		0.1	0.2/0.2		110.6	110.8									
		110.6 - 110.8' : Qtz - Ser - Mariposite (Sb), 1 py, 0.1 PZ.	35		4	1.9	A 544B	110.8	112.7	1.9	4.68	5.54	78.86		x1.1	8.89 5.15	10.53 6.09	149.83 86.75
		- 112.6 : Qtz - Sulph - Ser (Ps), 25 py, 10 po, 4 PZ.	50		13	1.9	545B		114.6	1.9	7.25	11.76	129.26			13.48	22.34	245.59
		- 114.0 : Mass. Sulphs (M), 65 py, 16 PZ.																
		C.A. F_2 = 70° @ 110.6 - 111.6, 40° to 112, 65° @ 112.2 - 114.					WT. AV.	110.8	114.6	3.8	5.47	8.65	104.06			22.67	32.87	395.42
		F_1 = 40° to F_2 @ 113.5'.					"	111.6	114.6	3.0	6.31	9.48	110.78			18.93	28.43	332.34
114.0	123.4	QTZ - SULPH - SER ± GRAPH (Ps)																
		114.0 - 114.6' : Banded Qtz - Graph Sulph (Po), 10 Py, 6 PZ.	0		0	1.2/1.2		114.6	115.8									
		- 115.8' : Qtz - Ser Phy (S). Sheared @ 114.6 - 115.2. Barren.	12		4	1.4	A 546B		117.2	1.4	2.08	2.70	25.37	✓				
		- 117.2 : Qtz - Ser - Sulph (SP), highly sheared. 12 py, 4 PZ.	0		0	0.8/0.9			118.1									
		- 118.1 : Qtz - Ser Phy (S), barren.	30		8	1.6	547B		119.9	1.8	3.20	4.70	43.54	✓		5.76	8.46	78.37
		- 119.4 : Qtz - Sulph - Graph (Pa). 8 py, 7 PZ.	0.2		0.1	0.9/1.1			121.0		/	/	/			/	/	/
		- 119.9 : Mass sulph banded w/ Qtz - Graph (MB) 50 py, 10 PZ.	45		9	2.4	548B		123.4	2.4	3.38	5.75	52.46	✓		8.11	13.80	125.90
		- 120.7 : Qtz - Ser Phy (S), barren except two 3cm bands PZ, py.					WT. AV.	118.1	123.4	5.3	2.62	4.20	38.54	✓		13.87	22.26	204.27

LOGGED BY [signature] D.D.H. Nº 76-A158 PAGE 8 of 9

Interval From	Interval To	DESCRIPTION	Recovery	Sample Nº	Interval From	Interval To	Sample Length	Assay Pb	Assay Zn	Assay Ag	Assay Au	Assay Cu	Assay x Pb	Assay x Zn	Assay x Ag
		- 121.0m : Bleached buff ser phy (Sb), barren.													
		- 122.5 : Qtz-Sulph, leached holes @ 120-120.3m, 45py, 6PZ.													
		- 123.4 : " - " - Graph, 40 py, 12 PZ.													
		C.A. F2 = 60° @ 115m, 85° @ 115.3, 60° @ 116, 75° @ 118.6,													
		85° @ 119.8, 65° @ 120.5, 55° @ 121.5,													
		75° @ 122-123m. (F2 mineralization)													
123.4	125.7	QTZ-SER PHY (S) Med. Gray.													
		45-50 % qtz, thinly laminated. 4 cm band of H.G/PZ	2.2/2.3		123.4	125.7									
		@ 123.7m.													
		C.A. F2 = 80 - 75°													
125.7	131.2	QTZ-SULPH-GRAPH (Pg) and QTZ-SER PHY, Bleached (Sb)													
		Qtz-Sulph-Graph : 5-15 % py, 3-6 PZ except @ 126.9 - 20 11	1.7	A774 ~~549~~ B	125.7	127.8	2.1	6.10 ~~2.70~~	11.28 ~~2.18~~	105.04 ~~38.40~~			13.81	23.69	220.58
		127.2 where mass sulph contains 45py, 22 PZ. F2 mineraliz'n. 1 1	1.3	A775 ~~550~~ B	(127.8 —	129.3 128.7	1.5 0.9)	1.38 ~~3.38~~	3.88 ~~2.70~~	18.17 ~~35.31~~			2.07 ~~1.24~~	5.82 ~~3.49~~	27.26 ~~16.35~~
		Qtz-Ser, Bleached Phy @ 127.8 - 129.3m, 128.5 - 129.1, 3 3	1.9	A776 ~~551~~ B		131.2	1.9	2.40 ~~3.10~~	4.75 ~~2.73~~	32.23 ~~42.51~~			4.56	9.03	61.24
		130.1 - 130.6m, generally minor mariposite but no PZ.		Wt. Av.	125.7	128.7	3.0	4.68	9.06	79.[illegible]			3% 14.05	27.18	236.93
		This section shows 2% leached holes.		Wt. Av.	125.7	131.2	5.5	3.53	7.01	56.2			19.44	38.54	309.08
		C.A. F2 = 70-75°. F1 sub-v. to F2, fair to good.													
131.2	135.6	QTZ-SER PHY													
		50% qtz, except qtz vein @ 132.3 - 133.7m.	1.6/2.5		131.2	133.7									

LOGGED BY T. Glow D.D.H. Nº 76-A158 PAGE 9 of 9

Interval From	Interval To	DESCRIPTION	Recovery	Sample Nº	Interval From	Interval To	Sample Length	Assay Pb	Assay Zn	Assay Ag	Assay Au	Assay Cu	Assay x Pb	Assay x Zn	Assay x Ag
		Thinly laminated phyllite, fissile, fractured &	1.6/1.9		133.7	135.6									
		brecciated adjacent to fault (gouge) @ 131.6-131.75'.													
		C.A. F_2 = 65-75°. F_1 local @ 134.8°-134.2'.													
	135.6	End of Hole.													
		REMARKS:													
		@ Cemented, 12 bags cement used. (Poured down casing.)													

DDH: FAGA158 -- 42 DEGREE PROFILE

(VIEW AZIMUTH = 312 DEGREES)

ELEV: 1302 592316E ; 905185N

PLUNGE ANGLE IS 11.0 TREND ANGLE IS 312.0

CORRECTED COLLAR POSITION: X = 648.7 Z = 1301.4

SECTION NAME: 78W

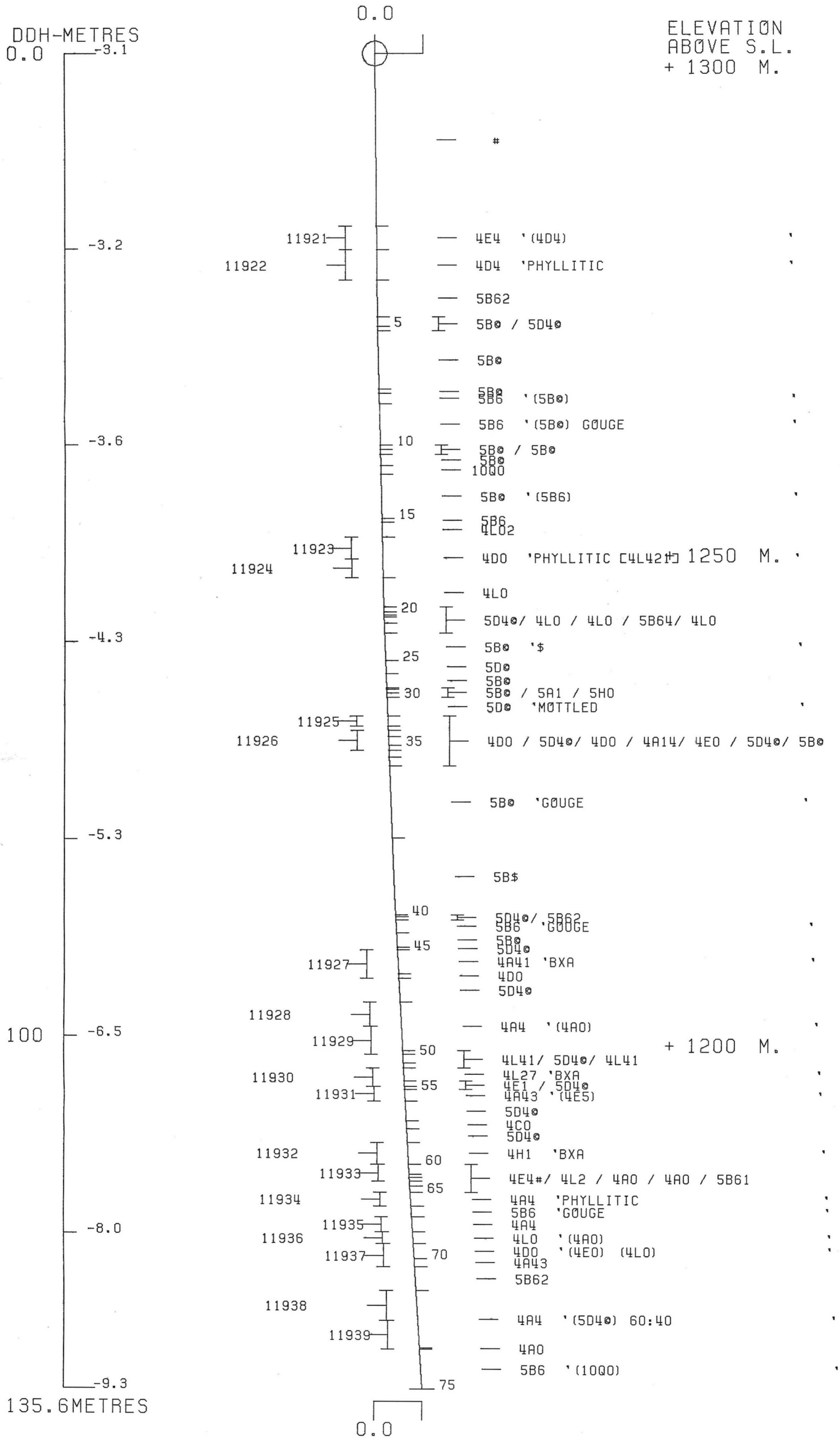

CYPRUS ANVIL MINING CORPORATION

PROGRAM DH162 11 DEC 1984 10:22 AM

DDH: FAGA158 -- 42 DEGREE PROFILE

(VIEW AZIMUTH = 312 DEGREES)

ELEV: 1302 592316E ; 905185N

PLUNGE ANGLE IS 11.0 TREND ANGLE IS 312.0

CORRECTED COLLAR POSITION: X = 648.7 Z = 1301.4

SECTION NAME: 78W

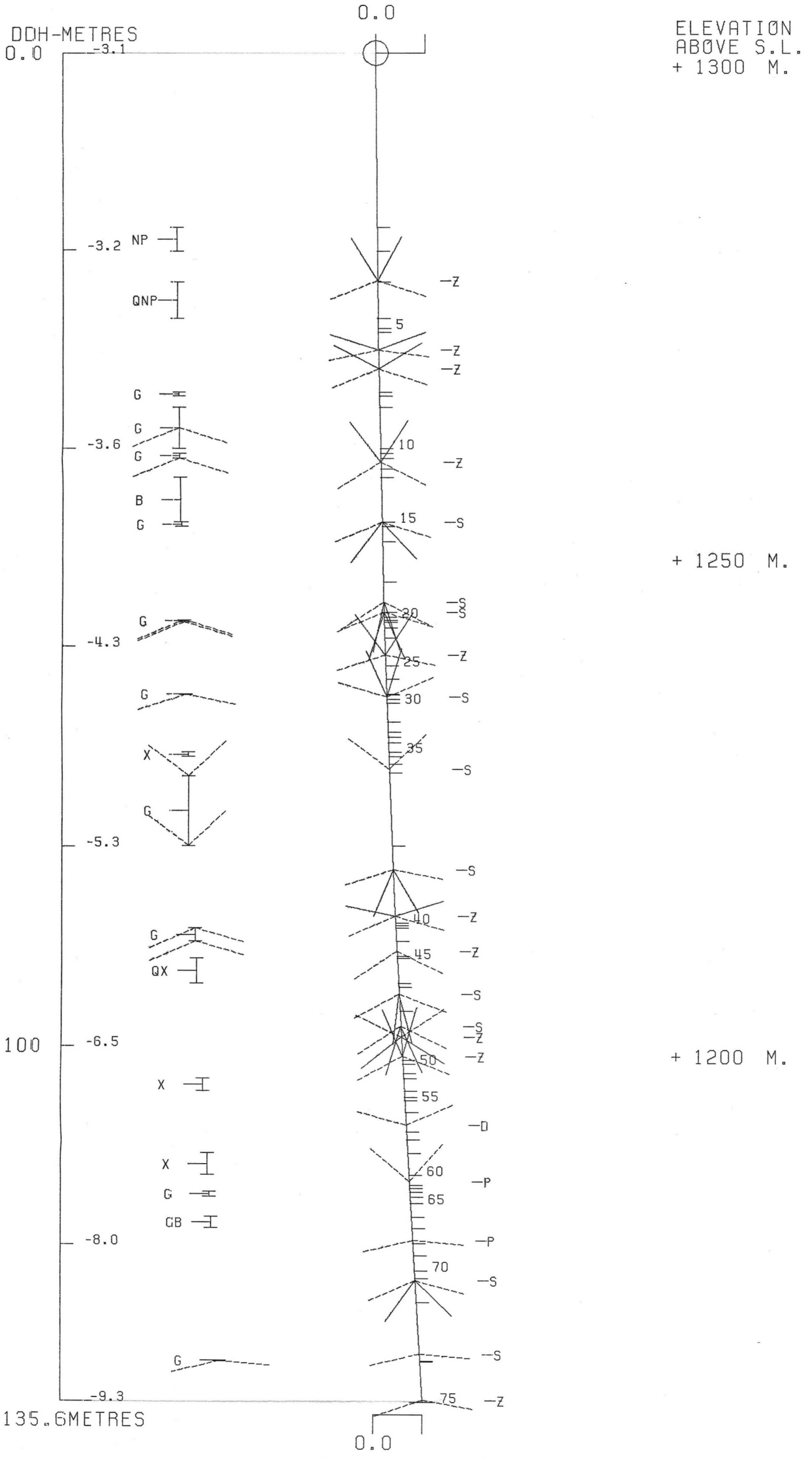

CYPRUS ANVIL MINING CORPORATION

PROGRAM DH161 11 DEC 1984 3:07 PM

FAGA161

DRILL HOLE : FAGA161
NORTHING : 905,186.2
EASTING : 592,316.0
ELEVATION : 1,301.9
TOTAL DEPTH : 122.2
SECTION : W 78
R.F.E. : S2
RFE DIRECTION: 230
PLUNGE ANGLE : 11
PLUNGE DIRECT: 312
DHD CALC: 1
SS CALC: 1

DETAIL RECORD COUNTS:

NOS ORE-SAMPLES:	20
NOS DOWN-H-SURVEYS:	4
NOS DOWN-H-LITHOLOGY:	45
NOS DOWN-H-STRUCTURE:	13
NOS DOWN-H-FAULTS:	17
NOS DOWN-H-SPLINES:	4
NOS COMPOSITES:	0

DDH: FAGA161 UTM-N: 905,186.2 UTM-E: 592,316.0 UTM-ELEV: 1,301.9 TOTAL DEPTH: 122.2 SECTION: W 78
RFE: S2 RFE DIR: 230 PLUNGE ANGLES: 11 312 DHD CALC: 1 SS CALC: 1

DEPTHS FROM	DEPTHS TO	SAMPLE NO.	INT.	REC.	ROCK UNIT	ASSAYS S.G. PULP	CU %	PB %	ZN %	AG(AA) G/MT	AG(FA) G/MT	AU(FA) G/MT	PO %	PY %	TOT FE	BAO %	HG %	MN %	AS %	BA %	S.G. W.R.
36.3	40.3	11869	4.0	1.7	4A0		.02	1.23	2.79	26.00											
48.7	50.4	11870	1.7	1.7	4A0	3.08	.05	1.67	3.29	36.00		3.91	1	8	10						
50.4	51.5	11871	1.1	1.1	4D0	3.04	.02	2.79	5.90	53.00		2.74	3	5	8						
55.2	57.3	11872	2.1	1.6	4A0	3.00	.08	.90	1.92	23.00		1.10	4	5	9						
57.3	61.1	11873	3.8	1.9	4A0	2.95	.02	.29	.54	3.99		.62	3	2	6						
61.6	63.3	92079	1.7	.5	4A0			.90	1.47	14.74											
63.1	64.6	11875	1.5	1.0	4A0	3.08	.05	1.12	2.20	22.00		1.85	1	6	8						
64.6	67.8	11876	3.2	2.4	4A0	3.16	.10	1.01	2.89	23.00		1.23	2	10	13						
67.8	69.8	11877	2.0	2.0	4A4	3.08	.07	1.59	3.89	34.00		.40	1	8	10						
69.8	71.5	11878	1.7	1.7	4A0	3.16	.04	1.96	2.79	37.00		.55	1	11	13						
71.5	73.8	11879	2.3	1.0	4A4	3.12	.04	1.87	4.29	40.00		.55	1	9	11						
73.8	76.8	11880	3.0	.7	4A0	3.08	.05	1.22	1.38	24.00	17.00	.62	1	10	11						
76.8	81.0	11881	4.2	4.2	4A0	3.16	.04	2.70	1.49	41.00		.40	1	11	13						
81.0	82.7	11883	1.7	1.5	4A4	3.14	.07	1.95	4.29	46.00		.75	1	9	10						
82.7	84.3	11884	1.6	1.1	4A4	3.06	.05	1.34	3.70	28.99		.47	1	7	9						
84.3	86.9	11885	2.6	1.2	4A0	2.87	.04	.54	1.07	10.00		.27	1	2	3						
86.9	89.0	11886	2.1	1.5	4A0	2.91	.07	.57	1.35	11.00		.68	1	2	4						
109.8	111.3	11887	1.5	1.4	4A4		.02	1.94	3.39	31.99											
114.7	116.7	11888	2.0	1.7	4A0	2.93	.02	1.69	3.00	31.99		.68	1	2	3						
116.7	120.0	11889	3.3	2.1	4A4	2.91	.02	3.20	4.20	54.00		3.14	1	2	3						
WEIGHTED AVERAGE																					
36.3	40.3		4.0	1.7			.02	1.23	2.79	26.00											
48.7	51.5		2.8	2.8		3.06	.03	2.11	4.32	42.67		3.45	2	7	9						
55.2	61.1		5.9	3.5		2.97	.04	.51	1.03	10.76		.79	3	3	7						
61.6	63.3		1.7	.5				.90	1.47	14.74											
63.1	89.0		25.9	18.3		3.08	.05	1.50	2.48	28.85	1.96	.67	1	8	10						
109.8	111.3		1.5	1.4			.02	1.94	3.39	31.99											
114.7	120.0		5.3	3.8		2.92	.02	2.63	3.74	45.69		2.22	1	2	3						

DDH: FAGA161 UTM-N: 905,186.2 UTM-E: 592,316.0 UTM-ELEV: 1,301.9 TOTAL DEPTH: 122.2 SECTION: W 78
RFE: S2 RFE DIR: 230 PLUNGE ANGLES: 11 312 DHD CALC: 1 SS CALC: 1

DEPTH	ZENITH	AZIMUTH
0.000	141.000	44.000
24.400	143.000	47.000
42.700	140.800	45.000
93.600	143.000	54.000

DDH: FAGA161 UTM-N: 905,186.2 UTM-E: 592,316.0 UTM-ELEV: 1,301.9 TOTAL DEPTH: 122.2 SECTION: W 78
RFE: S2 RFE DIR: 230 PLUNGE ANGLES: 11 312 DHD CALC: 1 SS CALC: 1

DEPTH	UNIT	CODE	DESC	RECOVERY	IND
30.5	0001	#		0.5-	1
32.8	0002	4L14	[4CO PHYLLITIC]	0.5-	1
36.3	0003	5D4@		0.5-	1
40.3	0004	4AO		0.5-	1
43.3	0005	5D4@	RUBBLE	0.5-	1
44.8	0006	4AO	BXA	0.5-	1
47.7	0007	5D4@		0.5-	1
48.1	0008	4A4		0.5-	1
48.7	0009	5D4@		0.5-	1
49.1	0010	4L14	[4DO PHYLLITIC]	0.5-	1
50.4	0011	4AO		0.5-	1
51.5	0012	4DO		0.5-	1
51.7	0013	5D4@		0.5-	1
53.7	0014	4L21	4	0.5-	1
53.9	0015	5D4@		0.5-	1
54.2	0016	4L4	(5D4@)	0.5-	1
55.2	0017	4AO	GOUGE	0.5-	1
64.6	0018	4AO		0.5-	1
65.2	0019	4L42	1	0.5-	1
67.8	0020	4AO		0.5-	1
71.5	0021	4A4	(4A41)(4AO)	0.5-	1
81.0	0022	4AO	(4A3) (4A4)	0.5-	1
84.3	0023	4A4		0.5-	1
89.0	0024	4AO		0.5-	1
90.8	0025	4L2		0.5-	1
92.0	0026	4CO	PHYLLITIC	0.5-	1
102.9	0027	5B62	9 PY	0.5-	1
103.5	0028	5B62	9 GOUGE	0.5-	1
106.4	0029	5B6		0.5-	1
107.9	0030	5B61	9 -> 4C5	0.5-	1
108.8	0031	4LC	GOUGE (5D4@)	0.5-	1
109.0	0032	5B4@		0.5-	1
109.8	0033	4AO	GOUGE	0.5-	1
111.3	0034	4A4		0.5-	1
111.9	0035	4AO	GOUGE	0.5-	1
112.2	0036	5A6		0.5-	1
112.5	0037	5D4@		0.5-	1
112.9	0038	5A61	9	0.5-	1
113.0	0039	5A61	9 GOUGE	0.5-	1
113.5	0040	5D4@		0.5-	1
113.7	0041	4A4	NO PY	0.5-	1
114.7	0042	5D4@		0.5-	1
120.0	0043	4A4	(4AO)	0.5-	1
121.1	0044	5D4@		0.5-	1
122.2	0045	5A16		0.5-	1

DDH: FAGA161 UTM-N: 905,186.2 UTM-E: 592,316.0 UTM-ELEV: 1,301.9 TOTAL DEPTH: 122.2 SECTION: W 78
RFE: S2 RFE DIR: 230 PLUNGE ANGLES: 11 312 DHD CALC: 1 SS CALC: 1

DDH	F DEPTH	T DEPTH	FEAT	SYMTRY	S0 ANGLE	S0 DIRECT	S1 ANGLE	S1 DIRECT	S2 ANGLE	S2 DIRECT	RFE CDE	DHDC	SDC	PROCESS
FAGA161	0.0	32.8	PS2		0	0	0	0	55	230	0	1	1	1
FAGA161	0.0	46.8	PS2		0	0	0	0	70	230	0	1	1	1
FAGA161	0.0	52.1	PS2		0	0	0	0	50	230	0	1	1	1
FAGA161	0.0	59.8	CS2	Z	0	0	30	180	55	230	0	1	1	1
FAGA161	0.0	66.4	CS2	Z	0	0	25	180	70	230	0	1	1	1
FAGA161	0.0	68.4	CS2	Z	0	0	20	180	55	230	0	1	1	1
FAGA161	0.0	77.8	CS2	Z	0	0	15	180	70	230	0	1	1	1
FAGA161	0.0	80.1	CS2	Z	0	0	25	180	70	230	0	1	1	1
FAGA161	0.0	87.3	CS2	Z	0	0	40	180	70	230	0	1	1	1
FAGA161	0.0	95.0	CS2	Z	0	0	15	180	70	230	0	1	1	1
FAGA161	0.0	100.8	CS2	Z	0	0	45	180	65	230	0	1	1	1
FAGA161	0.0	106.0	CS2	Z	0	0	45	180	60	230	0	1	1	1
FAGA161	0.0	113.5	CS2	S	0	0	50	0	50	230	0	1	1	1

DDH: FAGA161 UTM-N: 905,186.2 UTM-E: 592,316.0 UTM-ELEV: 1,301.9 TOTAL DEPTH: 122.2 SECTION: W 78
RFE: S2 RFE DIR: 230 PLUNGE ANGLES: 11 312 DHD CALC: 1 SS CALC: 1

DDH	F DEPTH	T DEPTH	FEAT	REC CD	PARLL	UPPER PLANE		INTERNAL PLANE		LOWER PLANE		DHD
FAGA161	30.5	32.8	P	5		0	0	0	0	0	0	1
FAGA161	32.8	36.3	P	5		0	0	0	0	0	0	1
FAGA161	40.3	43.3	RP	0		0	0	0	0	0	0	1
FAGA161	30.5	43.3	F			0	0	0	0	0	0	1
FAGA161	43.3	44.8	XP	0		0	0	0	0	0	0	1
FAGA161	54.2	55.2	G			0	0	0	0	0	0	1
FAGA161	60.1	61.6	FP	0		0	0	0	0	0	0	1
FAGA161	60.1	63.1	NNN			0	0	0	0	0	0	1
FAGA161	61.6	63.1	FP	2		0	0	0	0	0	0	1
FAGA161	72.2	76.8	PG	2		0	0	0	0	0	0	1
FAGA161	102.9	103.5	G			0	0	0	0	0	0	1
FAGA161	107.9	108.8	G			0	0	0	0	0	0	1
FAGA161	109.0	109.8	G			0	0	0	0	0	0	1
FAGA161	111.3	111.9	G	1		0	0	0	0	99	999	1
FAGA161	112.9	113.0	G			99	999	0	0	99	999	1
FAGA161	115.4	115.7	X			0	0	0	0	0	0	1
FAGA161	120.0	121.1	P	5		0	0	0	0	0	0	1

DDH: FAGA161 UTM-N: 905,186.2 UTM-E: 592,316.0 UTM-ELEV: 1,301.9 TOTAL DEPTH: 122.2 SECTION: W 78
RFE: S2 RFE DIR: 230 PLUNGE ANGLES: 11 312 DHD CALC: 1 SS CALC: 1

DDH	SEGMENT NOS	COND INDICATOR
FAGA161	1	2
FAGA161	2	2
FAGA161	3	2
FAGA161	4	1

CYPRUS ANVIL MINING CORPORATION

DIAMOND DRILL CORE LOG

Hole Number: FAGA 161

Project: GRUM RELOG

Location: 78 W

Claim: _____

U.T.M. ~~Terr. Plane~~ Co-ords.: 905186·2 N

1979 HIW Survey 592316·0 E

Grid Co-ords.: _____

Fabric Orientation Diagram:

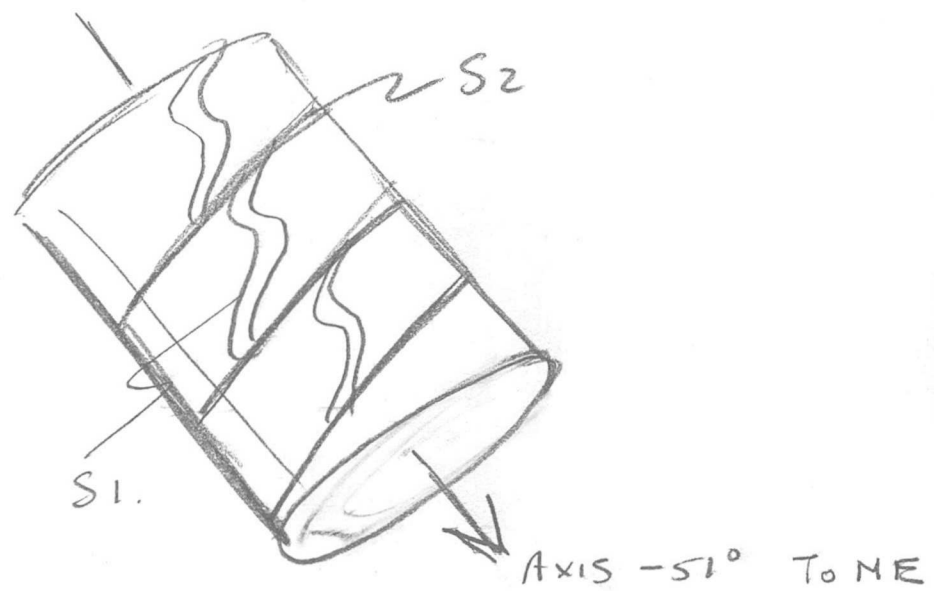

All symmetry determinations looking

NW with S2 dipping

SW with dip azimuth 230.

Elevation: ~~1309·1~~ 1301.9 m. (numbers transposed)

Total Depth: 122·2 m

Purpose: GRUM U/G.

Logged by: DSJ - JGS Date(s) Logged: 19 SEPT 81

Drilling Contractor: CAM - McCutch.

Core:

Size	From	To
BQ	0	122·2

Collar Cased and Capped: ____

Inclined DDH — -51° @ N44E°

Started: SEP 19/76 Completed: SEP 22/76

Cyprus Anvil Mining Corp.

DDH FAGA1161 (2 8)

Diamond Drill Core Log Date: 19 SEP 81 Logged By: DSJ-JGS

Code	Drillhole	Elevation	Northing	Easting	Units (feet/metres)	R.F.E.	
1	2 8	10 16	17 24	25 32	34 39	41 42	
T	FAGA1161	1391.9	9051861.2	592316.0	METRES	S2	

Code	Drillhole	Depth	Zenith Angle	True Azimuth	Comments
1	2 8	10 14	22 26	28 32	34 56
R	FAGA1161	000	180.0	0.0	AT COLLAR
R	FAGA1161	0.0 122	141.0	144.0	SPERRY MAG
R	FAGA1161	244	143.0	147.0	
R	FAGA1161	427	140.8	145.0	
R	FAGA1161	936	143.0	154.0	

delete

see original records - inclined DDH

Code	Drillhole	Comments, Errant Remarks, Snivellings and / or Lewd Suggestions
1	2 8	10 56

DDH FAGA161 (2–8 METRES)

Cyprus Anvil Mining Corp.

Lithologic Log

Date: 19 SEPT Logged By: DSJ - JGS

Code	From	To	Recov.	No.	Unit	Description
1	10–14	16–20	22–24	26–28	30–34	35
L	0	30		01	*	O/B
L	30	32		02	4L14	[4C0 PHYLL] 1m lost core.
L	32	36		03	5D4*	Ank. 32·8 - 33·6 >5% Fusch. REC 1·8m
L	36	40		04	4A0	
L	40	43		05	5D4*	RUBBLE F 0·2m REC ONLY
L	43	44		06	4A0	BRECC < ·1 m REC
L	44	47		07	5D4*	ANK 44·8 - 45·5 2-5% FUSCH
L	47	48		08	4A4	
L	48	48		09	5D4*	ANK. 1% FUSCH.
L	48	49		10	4L14	[4D0 PHYLL]
L	49	50		11	4A0	
L	50	51		12	4D~~4~~0	see assays
L	51	51		13	5D4*	ANK.
L	51	53		14	4L21	4
L	53	53		15	5D4*	
L	53	54		16	4L4	(5D4*)
L	54	55		17	4A0	GOUGE NIL/ATT F.
L	55	64		18	4A0	
L	64	65		19	4L421	[60·1 - 63·1 NO CORE F.]
L	65	67		20	4A0	
L	67	71		21	4A4	(4A41)(4A0) see assays
L	71	81		22	4A0	(4A3)(4A4) [72·2 - 76·8 POOR REC
L	81	84		23	4A4	see assays 3 MUD SEAMS 1m REC]
L	84	89		24	4A0	
L	89	90		25	4L2	
L	90	92		26	4C0	PHYLL
L	92	102		27	5B629	Py ∥ S1
L	102	103		28	5B629	GOUGE NIL/ATT F.
L	103	106		29	5B6	
L	106	107		30	5B619	→ 4C5
L	107	108		31	4L0	GOUGE F (5D4* ANK) NIL/ATT
L	108	109		32	5B4*	ANK.
L	109	109		33	4A0	GOUGE F NIL/ATT.
L	109	111		34	4A~~0~~4	see assays
L	111	111		35	4A0	GOUGE LC ∥ S2 UC IND. 0·1m REC
L	111	112		36	5A6	

DDH FAGA161 (2 — 8)

Cyprus Anvil Mining Corp.

Lithologic Log

Date: 19 SEP 81 Logged By: DSJ - JGS

Code	From	To	Recov.	No.	Unit	Description
1	10 — 14	16 — 20	22 — 24	26 — 28	30 — 34	35
L	11112	11125		37	504*	neg. fusch.
L	11125	11129		38	5A619	
L	11129	11130		39	5A619	GOUGE F. cll Sz. ARTIF?
L	11130	11135		40	504*	ANK < 1% fush.
L	11135	11137		41	4A4	NON PYR.
L	11137	11147		42	504*	ANK < 1% fusl.
L	11147	12000		43	4A4	Breccia Δ 115.4 - 115.7 (4AO) see assays
L	12000	12111		44	504*	ANK. neg. fusl. '6 m REC. (MUD 125)
L	12111	12122		45	5A16	
						END OF HOLE

C. A. M. C. 1981 – E-3

DDH FAGA16.1 (2 — 8)

Cyprus Anvil Mining Corp.

Structural Log

Date: 18SEP81 Logged By: DSJ - JGS

Code	From	To	Feature	Sym	S_0 Dip Direct.	S_1 Dip Direct.	S_2 Dip Direct	Description
1	10 — 14	16 — 20	22 — 24	26	28 — 32	34 — 38	40 — 44	
S		1312	PS2				515 2310	
S		1468	PS2				710 2310	
S		1512	PS2				510 2310	
S		1598	CS2	Z		310 0510	515 2310	
S		1664	CS2	Z		215 0510	710 2310	
S		1684	CS2	Z		210 0510	515 2310	
S		1778	CS2	Z		115 0510	710 2310	
S		1801	CS2	Z		215 0510	710 2310	
S		1873	CS2	Z		410 0510	710 2310	
S		1950	CS2	Z		115 0510	710 2310	
S		11008	CS2	Z		415 0510	615 2310	
S		11060	CS2	Z		415 0510	610 2310	
S		11135	CS2	S		510 2310	510 2310	
S			C					

DDH FAGA161 (2–8) Cyprus Anvil Mining Corp

Logged by DSJ - JGS

ASSAY LOG (SAMPLER'S COPY) Date 19 SEP 81 Sampled by

CODE	FROM	TO	SAMPLE	INTR.	REC (m)	UNIT	DESCRIPTION
1	10–14	16–20	22–26	28–30	32–34	36–40	42
P	1363	1403	118619	40	17	4A01	
P	1487	1504	118770	17	17	4A01	4L
P	1504	1511	118771	11	11	4D41	
P	1552	1573	118772	21	16	4A01	
P	1573	1611	118773	38	19	4A01	
	1611	1631	118774				FAULT NO REC.
P	1631	1646	118775	15	10	4A01	
P	1646	1678	118776	32	24	4A01	4L4
P	1678	1698	118777	20	20	4A41	
P	1698	1715	118778	17	17	4A41	
P	1715	1738	118779	23	10	4A01	} POOR REC.
P	1738	1768	118810	30	07	4A01	}
P	1768	1810	118811	42	42	4A01	
P	1810	1827	118813	17	15	4A41	NB 11882 DISCARDED
P	1827	1843	118814	16	11	4A41	TICKET
P	1843	1869	118815	26	12	4A01	
P	1869	1890	118816	21	15	4A01	
P	1816	1830		14		4A01	
P	10998	11113	118817	15	14	4A01	
P	11147	11167	118818	20	17	4A41	
P	11167	11200	118819	33	21	4A41	

120'

METERS

FAULT

DDH FAGA161 (2 8)

Cyprus ~~Anvil~~ Mining Corp.

~~Structural~~ Log

Page _____ of _____

Date: 05 OCT 83 Logged By: _____

Code	From	To	Feature	Sym	S_0 Dip Direct.	S_1 Dip Direct.	S_2 Dip Direct	Description
1	10 14	16 20	22 24	26	28 32	34 38	40 44	
F	305	328	P	5				56% recovry – no reason given
F	328	363	P	5				51% recovry – no reason given
F	403	433	RP	0				6% recovry of rubble
F	433	448	XP	0				6% recovry bxa
F	305	433	F					overall fault zone for this
								interval – poor recovry +
								rubble & bxa
F	542	552	G					gouge IND
F	601	631	NNN					No core – KA sample because
								recovry recorded in KA log
F	722	768	PG	2				poor recovry – 3 mud seams
								21% recovry
F	1029	1035	G					IND gouge
F	601	616	FP	0				9% recovry from KA logs
F	616	631	FP	2				29% recovry from KA logs
F	1079	1088	G					IND gouge
F	1090	1098	G					IND gouge
F	1113	1119	G	1			99999	16% recovry – up cnt IND,
								lower cnt // S_2
F	1129	1130	G		99999		99999	cnts // S_2
F	1154	1157	X					bxa
F	1200	1211	P	5				55% recovry, mud @ 120.5

DIAMOND DRILL RECORD

LOGGED BY [signature] D.D.H. № 76-A161 PAGE 1 of 6

PROPERTY GRUM JOINT VENTURE, Y.T.

	CO-ORDS	GRID		
LATITUDE		0°	STARTED	Sept. 19/76 N.S.
DEPARTURE		78 W	COMPLETED	Sept. 22/76 D.S.
ELEVATION		Surface	PROPOSED DEPTH	125 m
			ULTIMATE DEPTH	122.2 m

HOLE SURVEY:

DEPTH	BEARING	DIP
Collar	N44E	-51°
80' (24.4m)	use 044	-53°
140' (42.7m)	044	-51°
307' (93.6m)	054	-53°

CLAIM №

N

DIRECTION AND DISTANCE FROM N.E. CLAIM POST

Interval From	Interval To	DESCRIPTION	Recovery Meter	Sample №	Interval From	Interval To	Sample Length	Assay Pb	Assay Zn	Assay Ag	Assay Au	Assay Cu	Assay x Meter Pb	Assay x Meter Zn	Assay x Meter Ag
0	30.5 meter	OVERBURDEN (Trisoned). A few pieces of greenstone + qtz recovered			0	30.5									
30.5	32.8	QTZ-SER-SULPHS (SP) Bleached Buff													
		60% qtz, 1PY, 1PZ. Minor rust top 1m. C.A.=50°	0.35 / 2.3		30.5	32.8		1 PZ, est.							
32.8	35.1	TALC-QTZ-CHL-SER-MARIPOSITE (TCS) Green, Cream.													
		32.8-33.4m: Talc-Chl-Qtz, soft	0.6 / 0.7		32.8	33.5									
		-34.2: Talc-Mariposite-Ser, soft.	0.65 / 1.6			35.1									
		-35.1: Talc-Ser-Qtz, soft, 5% leached, 1% rust.													
		C.A. 30° @ 33-33.4m, 50° @ 33.9, 25° @ 35m.													
35.1	36.0	QUARTZ-SERICITE-SULPHIDES (SbP) Bleached Buff													
		60% leached, 50% med. brown rusty fractures. Note PZ	0.18 / 0.9		35.1	36.0		0.5 PZ, est.							
		in qtz banding. (As 30.5-32.8m). Soft + friable.													
				[illegible]	[illegible]	[illegible]	[illegible]	[illegible]	[illegible]	[illegible]			[illegible]	[illegible]	[illegible]
36.0	41.0(?)	QTZ-SULPHI-GRAPH (PG)													
		70-75% qtz, 3PY, 3PZ. Siliceous, highly fractured,	0.65	A 582 B	36.0	37.8	1.8	[illegible]	[illegible]	[illegible]			3.20	6.62	[illegible]
		most fractures show med. brown rusty oxidation.	0.5	583 B		40.2	2.4	[illegible]	[illegible]	[illegible]			3.91	8.28	[illegible]

LOGGED BY F. Chow D.D.H. Nº 76-A161 PAGE 2 of 6

Interval From	Interval To	DESCRIPTION	Recovery	Sample Nº	Interval From	Interval To	Sample Length	Assay Pb	Assay Zn	Assay Ag	Assay Au	Assay Cu	Assay x Meter Pb	Assay x Meter Zn	Assay x Meter Ag
		40.2-41(?)m : possible shear.	0.07/0.8			41(?)		as 36-40.2m							
		C.A. 70° @ 36-37.8m, 35° @ 38-40m. F2 nose @ 37.9m (?).													
41(?)	43.3(?)	QTZ-SER-CHL-TALC	0.1/2.3		41(?)	43.3(?									
43.3(?)	44.8(?)	QTZ-GRAPH-SULPHI (GP)													
		Appear to be brecciated & healed. Note PZ blebs.	0.07/1.5		43.3(?	44.8(?)		0.5 PZ, est.							
44.8(?)	48.7	QTZ-SER-TALC-MARIPOSITE (SbT) Off-White w/Green.													
		Soft, talcy bleached & leached sericite w/mariposite	1.7/2.9		44.8(?)	47.7									
		Content from 2-15% @ centre & both ends (0.3-0.5m).	0.3/0.4			48.1		3 PZ, est.							
		47.7-48.1m : Qtz-Sulphs-Ser, 1 py, 3 PZ.	0.5/0.6			48.7									
		C.A. 35° @ 44.8-45.2m, 70° @ 45.4-47.7, 75° @ 48.1m.													
48.7	51.3	QTZ-SULPHI-SER-GRAPH (PSG)													
		70-85% qtz, 1-4% ser or graph. (py 1, PZ 3)		A584B	48.7	49.7	1.0	[illegible]	[illegible]	[illegible] 22			[illegible]	[illegible]	[illegible]
		48.7-49.1m : Qtz Sericite, white, 1 py, 3 PZ. (py 7, PZ 5)		585B		51.3	1.6	[illegible]	[illegible]	[illegible]			[illegible]	8.56	[illegible]
		-50.4 = Qtz-Graphite, gray, 10 py 3 PZ													
		-51.3 = Qtz-Ser, white, 2 py, 7 PZ		[illegible]	[illegible]	51.3	2.6	[illegible]	5.06	[illegible]			[illegible]	13.16	104.66
		Upper & lower contact ∥ F2, sharp.													
		C.A. 70-65°. F1 not evident.													

LOGGED BY J. Chow D.D.H. Nº 76-A161 PAGE 3 of 6

Interval From	Interval To	DESCRIPTION	Py	Pz	Recovery	Sample Nº	Interval From	Interval To	Sample Length	Assay Pb	Assay Zn	Assay Ag	Assay Au	Assay Cu	Assay x Pb	Assay x Zn	Assay x Ag
51.3	54.1	QTZ-SER-SULPHS (SBP) Bleached Buff.															
		60% qtz, irregular spaced bands of py & Pz.			1.7/2.8		51.3	54.1									
		Locally leached w/ vug holes. Av. 8% py.															
		C.A. 70-65°				Wt Av.	61.6	68.5	6.9	8.54	Pb-Zn						
						"	~~78.0~~ 68.5	76.8	6.8	2.09	4.34	35.24			14.19	29.54	239.64
							7'										
54.1	55.5	FAULT															
		Dark gray gouge, breccia & crushed phyllite.			0.6/1.2		54.1	55.5									
55.5	89.0	QTZ-SULPHS-GRAPH (Pa)															
		70-80% qtz, 0-20% (Av. 10) py, 0-7.5 Pz.	5	4	1.35	A 586 B	55.5	57.3	1.8	0.45	2.03	17.14	✓				
		Banded, mainly diffuse sulphs within qtzose bands. Siliceous	2	0	0.8/1.2			58.5									
		but parts readily along F_2. Chiefly Fe mineralization.	0	0	0.5/1.5	-		60.0									
		57.3-60': Negli sulphs, sericitic, fractured. 60-61.6' probable shear.	0	0	0.14/1.6			61.6									
		C.A. F_2 = 50-60° @ 55.5-66.7', 75-80° @ 66.8-67.5',	4	1.5	0.5 m	A-587 B		63.3	1.7	0.90	1.48	14.74			2.38	Pb-Zn	
		60° @ 67.9-73.8, 80° @ 74.5, 75-70° @	7	3	0.9 m	588 B		65.5	2.2	0.85	1.13	14.74			1.98	"	
		77-89'.	10	3	1.3	589 B		67.0	1.5	1.30	2.33	21.96			3.53	"	
		F_1: 60-90° to F_2 @ 57.2', 58.1, 59.7, 63.2, 65.5-74',	15	5.5	1.05	590 B		68.5	1.5	0.83	1.73	17.14			2.56	"	
		70-89' (excellent F_1)	20	7	1.45	591 B		70.0	1.5	1.28	2.80	25.37	✓				
			20	7.5	1.2	592 B		71.5	1.5	1.78	4.55	31.20			2.67	6.83	46.80
			20	2	0.95 m	593 B		74.5	3.0	2.23	3.20	33.26			6.69	9.60	99.78
			20	8	0.25 m	594 B		76.8	2.3	3.10	5.70	40.46			4.83	13.11	93.06
			5	0.6	0.5	595 B		77.3	0.5	0.80	1.40	15.09	✓				

LOGGED BY _____ D.D.H. Nº 76-A161 PAGE 4 of 6

Interval From	Interval To	DESCRIPTION	By	Pt	Recovery	Sample Nº	Interval From	Interval To	Sample Length	Assay Pb	Assay Zn	Assay Ag	Assay Au	Assay Cu	Assay x Pb	Assay x Zn	Assay x Ag
			12	0.1	3.6/3.6		77.3	80.9									
			6	0.2		A-596B		81.4	0.5	1.00	0.75	20.23	✓				
			10	6		597B		82.9	1.5	2.15	5.06	40.46			3.23	7.59	60.69
			10	6		598B		84.4	1.5	1.65	3.80	28.46			2.48	5.70	42.69
			2	2		599B		85.9	1.5	0.73	1.28	9.94	✓				
			3	0.5		A-600B		89.0	3.1	0.63	1.08	9.94	✓				
89.0	92.0	Qtz-Ser-Sulphs Phy (SbP) Bleached Buff.				WS A-	81.4	84.4	3.0	1.90	4.43	34.46			5.71	13.29	103.38
		70% qtz, 5 py, 0.6 Pt. Bleaching gradual			1.0/1.5		89.0	90.5		0.6 Pt, cut.							
		@ both contacts. Rock hard but parts readily.			0.7/1.5			92.0		0.6 Pt, cut.							
		C.A. F_2 = 65-70°. F_1 = 60° to F_2, fair.															
92.0	107.9	Qtz – Ser Phy (S) Med. Gray - Light Gray															
		50-60% qtz, 3-4% ankerite(?) as blebs within qtz-ser			0.9/1.0		92.0	93.0									
		bands + occasional bleb or lense of Pb Zn.			0.76/1.5			94.5									
		Rock massive, moderately firm to 0.101m but, parts readily			3/3.0			97.5									
		along F_2. 97.5-98.5m probable shearing 101-107.9m: highly sheared,			0.5/1.0			98.5									
		probable faults, and rock is completely crushed @ 102.9-103.5m.			4.4/5.7			104.2									
		C.A. F_2 = 70-50° @ 92-92.6m, 75-70-65-70° @			0.18/1.3			105.5									
		93 –			1.3/2.4			107.9									
		F_1 = sub-v. to F_2, fair to good @ 92 –															

LOGGED BY J. Shaw D.D.H. Nº 76-A161 PAGE 5 of 6

Interval From	Interval To	DESCRIPTION	Py	PZ	Recovery	Sample Nº	Interval From	Interval To	Sample Length	Assay Pb	Assay Zn	Assay Ag	Assay Au	Assay Cu	Assay x Pb	Assay x Zn	Assay x Ag
107.9	109.0	FAULT in Qtz-Ser Phy, Bleached Buff (Sb)															
		Fine breccia & gouge to 108.8' (?). 108.8-109':			0.85/0.9		107.9	108.8									
		undisturb buff ser phy.			0.2/0.2			109.0									
109.0	120.4	QUARTZ-SULPHS-GRAPH (Pa), FAULT, QTZ-SER PHY (Sb)															
		109.0 - 109.8' : FAULT BRECCIA & sheared phyllite, minor pyrite.	1	0	0.45/0.8		109.0	109.0									
		- 111.5 : (Pa), 3 py, 4 PZ	3	4	1.33	A 701 B		111.5	1.7	2.20	3.10	31.20	✓				
		- 111.9 : probable FAULT, graphitic breccia	0	0	2.7/3.2			114.7									
		- 112.3 : (GP), 0.2 py, no PZ.	3	4	1.45	702 B		116.4	1.7	1.50	2.23	27.43	✓				
		- 112.5 : (Sb), barren	3	6	0.42	703 B		118.0	1.6	5.64	5.80	91.84			9.02	9.28	147.02
		- 113.0 : (G), barren	4	6	1.2	704 B		119.7	1.7	2.85	3.98	49.37			4.85	6.77	83.93
		- 113.1 : FAULT, breccia graphitic.	0	0	0.16/0.7			120.4									
		- 113.5 : (Sb), barren.															
		- 113.7 : (Pa), 0.5 py, 4 PZ.				WI A	116.4	119.7	3.3	4.20	4.86	69.98			13.87	16.05	230.95
		- 114.7 : (Sb), barren.															
		- 119.7 : (Pa), 3.5 py, 6 PZ															
		- 120.4 : (G), contorted, probable sheat, negl. py.															
		C.A. F_2 = 90° @ 109.8', 65-70° @ 110.1 - 113.7', 70-45-70° @															
		113.7 - 114.6', 65-70° @ 114.7 - 119.5'															
		F_1 = 60-90° to F_2 @ 110.4 - 118.6', good.															
120.4	121.0	QTZ-SER PHY (Sb) Bleached Buff															
		Siliceous, buff ser phy. F_2 = 70°			0.4/0.6		120.4	121.0									

LOGGED BY [signature] D.D.H. Nº 76-A161 PAGE 6 of 6

Interval From	Interval To	DESCRIPTION	Recovery	Sample Nº	Interval From	Interval To	Sample Length	Assay Pb	Assay Zn	Assay Ag	Assay Au	Assay Cu	Assay x Pb	Assay x Zn	Assay x Ag
121.0	122.2	QTZ - GRAPH - SER PHY (GS)													
		Graphitic to 121.7m, sericitic from 121.7-122.2m.	0.7/1.2		121.0	122.2									
		C.A. 70-40-75° from 121-122.0m													
	122.2	END OF HOLE.													
		REMARKS:													
		① Cemented, 11 bags cement, poured down casing.													
		② No large boulders encountered in overburden.													

DDH: FAGA161 -- 42 DEGREE PROFILE

(VIEW AZIMUTH = 312 DEGREES)

ELEV:1302 592316E ; 905186N

PLUNGE ANGLE IS 11.0 TREND ANGLE IS 312.0

CORRECTED COLLAR POSITION: X = 650.2 Z = 1301.5

SECTION NAME: 78W

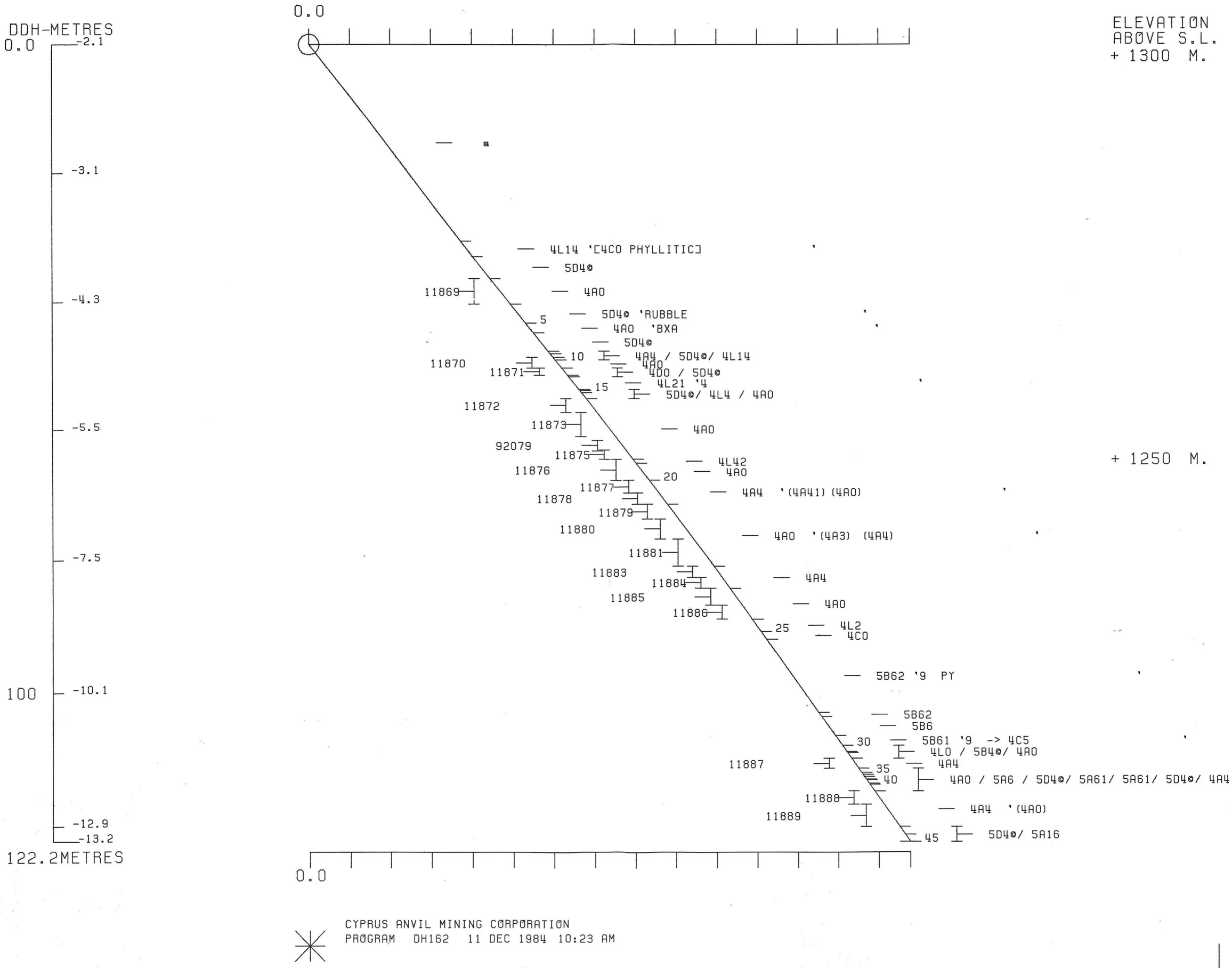

CYPRUS ANVIL MINING CORPORATION
PROGRAM DH162 11 DEC 1984 10:23 AM

DDH: FAGA161 -- 42 DEGREE PROFILE

(VIEW AZIMUTH = 312 DEGREES)

ELEV: 1302 592316E ; 905186N

PLUNGE ANGLE IS 11.0 TREND ANGLE IS 312.0

CORRECTED COLLAR POSITION: X = 650.2 Z = 1301.5

SECTION NAME: 78W

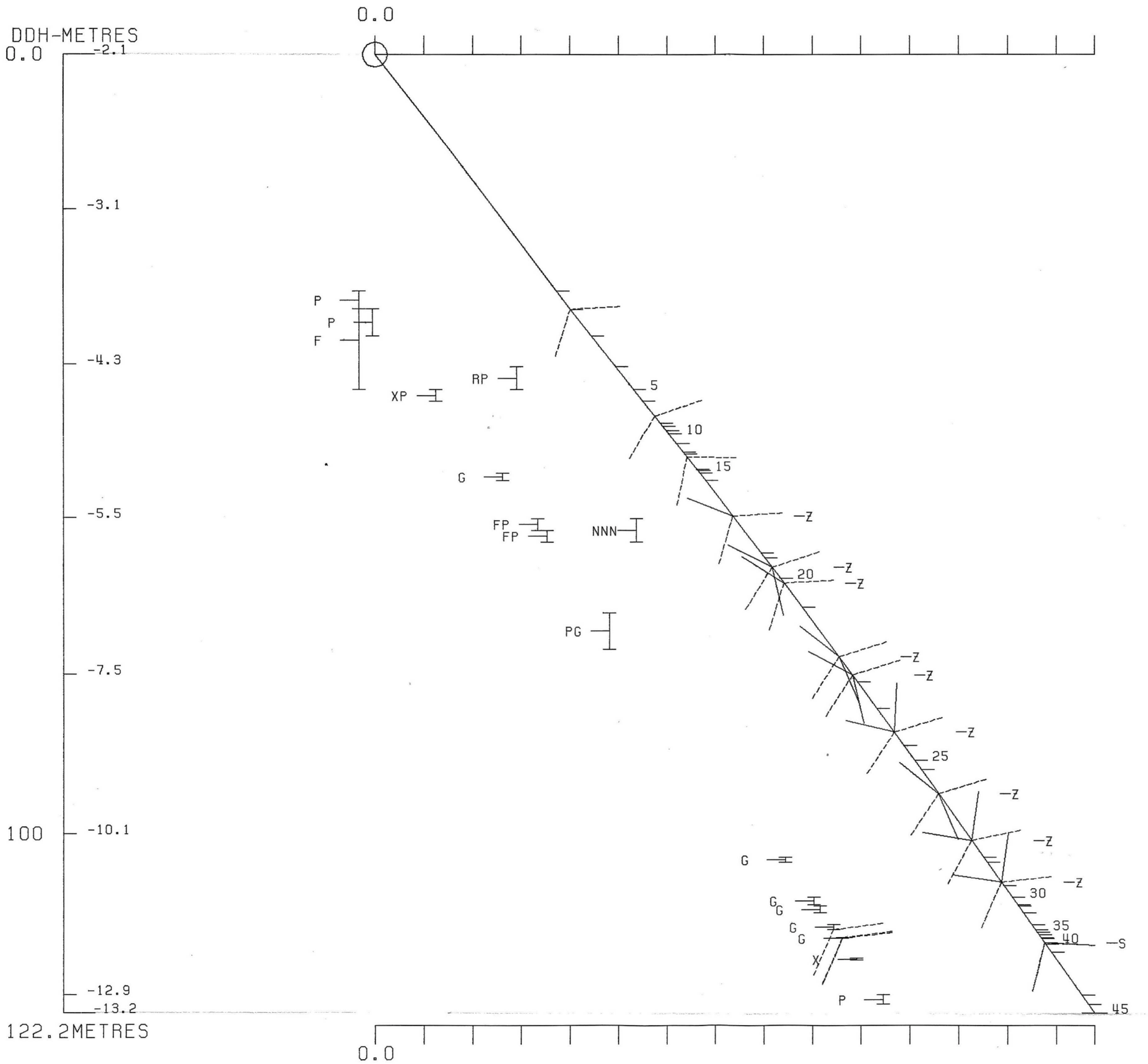

CYPRUS ANVIL MINING CORPORATION
PROGRAM DH161 11 DEC 1984 3:09 PM

FAGA214

DRILL HOLE : FAGA214
NORTHING : 905,321.7
EASTING : 592,344.8
ELEVATION : 1,302.0
TOTAL DEPTH : 492.8
SECTION : W 80
R.F.E. :
RFE DIRECTION: 230
PLUNGE ANGLE : 11
PLUNGE DIRECT: 312
DHD CALC: 1
SS CALC: 0

DETAIL RECORD COUNTS:

NOS ORE-SAMPLES: 34
NOS DOWN-H-SURVEYS: 9
NOS DOWN-H-LITHOLOGY: 156
NOS DOWN-H-STRUCTURE: 111
NOS DOWN-H-FAULTS: 56
NOS DOWN-H-SPLINES: 9
NOS COMPOSITES: 0

DDH: FAGA214 UTM-N: 905,321.7 UTM-E: 592,344.8 UTM-ELEV: 1,302.0 TOTAL DEPTH: 492.8 SECTION: W 80
RFE: RFE DIR: 230 PLUNGE ANGLES: 11 312 DHD CALC: 1 SS CALC: 0

DEPTHS FROM	DEPTHS TO	SAMPLE NO.	INT.	REC.	ROCK UNIT	ASSAYS S.G. PULP	CU %	PB %	ZN %	AG(AA) G/MT	AG(FA) G/MT	AU(FA) G/MT	PO %	PY %	TOT FE	BAO %	HG %	MN %	AS %	BA %	S.G. W.R.
53.0	55.8	11558	2.8	.7	4A4*	3.23	.03	2.70	3.50	44.00	46.00	.34	4	6	10						
67.7	68.3	11559	.6	.5	4AE	3.55	.02	3.90	6.30	69.00		.48	2	5	8						
68.3	69.1	11560	.8	.7	5D*	3.20	.05	2.90	3.30	59.00		1.44	5	1	6						
69.1	69.5	11561	.4	.4	4D4	3.23	.03	4.00	7.70	62.00		1.17	2	2	5						
70.6	71.3	11562	.7	.7	4C0	3.56	.07	1.61	2.50	29.00		.89	2	15	18						
71.8	72.2	11563	.4	.4	4CA	3.09	.09	1.56	1.90	23.00		.69	1	3	5						
74.2	74.7	11564	.5	.5	4D4	3.41	.09	5.70	4.70	62.00		.62	1	7	9						
75.9	76.2	11565	.3	.3	4E4	4.78	.08	11.10	20.20	200.00		1.30	3	15	19						
76.2	76.6	11566	.4	.3	4A0	3.41	.01	.83	1.75	18.00		.48	1	9	10						
76.6	77.0	11567	.4	.3	4E4	4.63	.02	7.30	14.40	135.00	130.00	1.30	1	27	28						
77.0	78.0	11568	1.0	1.0	4A4	3.51	.02	3.00	6.40	56.00		.55	1	9	11						
78.0	79.5	11569	1.5	1.5	4E4*	3.89	.02	5.90	13.70	115.00		.82	2	13	15						
79.5	80.9	11570	1.4	1.4	4E4*	3.99	.08	8.50	15.70	153.00		1.03	2	13	15						
80.9	81.4	11571	.5	.5	4A0	2.99	.02	.22	.38	4.00		.14	1	2	4						
81.4	82.5	11572	1.1	1.1	4E4	4.05	.04	5.50	14.30	111.00		.69	6	15	22						
82.5	84.5	11573	2.0	2.0	4D4	3.18	.02	4.30	11.50	82.00		.21	3	2	5						
84.5	86.5	11574	2.0	2.0	4D4	3.17	.03	3.00	9.40	58.00		.27	3	2	5						
86.5	88.0	11575	1.5	1.5	4D4	3.31	.02	5.20	11.60	104.00		.34	2	2	4						
93.0	93.4	11576	.4	.4	4A41	3.38	.02	2.90	7.70	55.00		.34	2	7	9						
93.4	94.1	11577	.7	.7	4A0	3.04	.01	.11	.30	3.00		.07	1	3	4						
94.1	94.7	11578	.6	.6	4E4	4.47	.01	1.65	6.70	22.00	26.00	.82	1	34	35						
94.7	95.4	11579	.7	.7	4A14	3.20	.01	3.90	11.70	63.00		.27	1	1	3						
95.4	96.8	11580	1.4	1.4	4A0	2.96	.01	.08	.17	3.00		.07	2	1	3						
96.6	100.6	11581	2.0	2.0	4A0	2.96	.01	.71	1.46	16.00		.07	2	1	3						
100.6	102.1	11582	1.5	.9	4A0	2.93	.01	1.12	3.30	22.00		.14	1	1	2						
180.8	182.8	11583	2.0	2.0	5A19		.01	.03	.08	3.00											
182.8	184.8	11584	2.0	2.0	5A19		.01	.05	.09	3.00											
184.8	186.8	11585	2.0	1.8	5A19		.01	.05	.11	3.00											
186.8	188.9	11586	2.1	1.7	5A19		.01	.02	.04	1.00											
291.1	293.7	11776	2.6	2.6	4GE4	4.46	.25	9.60	12.40	150.00		2.61	1	20	21						
293.7	295.9	11777	2.2	2.2	4DC	2.98	.04	1.23	2.50	25.00		.55	3	4	7						
295.9	297.3	11778	1.4	1.4	4L14	2.88	.02	.60	.74	6.00		.48	2	1	3						
321.2	325.5	11779	4.3	1.6	4E4	3.48	.03	2.10	3.20	40.00		.69	1	15	17						
325.5	327.2	11780	1.7	1.7	4A4	3.31	.07	2.20	3.90	44.00		1.10	2	13	15						
WEIGHTED AVERAGE																					
53.0	55.8		2.8	.7		3.23	.03	2.70	3.50	44.00	46.00	.34	4	6	10						
67.7	69.5		1.8	1.6		3.32	.03	3.47	5.27	63.00		1.06	3	3	7						
70.8	71.5		.7	.7		3.56	.07	1.61	2.50	29.00		.89	2	15	18						
71.8	72.2		.4	.4		3.09	.09	1.56	1.90	23.00		.69	1	3	5						

DDH: FAGA214 UTM-N: 905,321.7 UTM-E: 592,344.8 UTM-ELEV: 1,302.0 TOTAL DEPTH: 492.8 SECTION: W 80
RFE: RFE DIR: 230 PLUNGE ANGLES: 11 312 DHD CALC: 1 SS CALC: 0

DEPTHS FROM	DEPTHS TO	SAMPLE NO.	INT.	REC.	ROCK UNIT	ASSAYS S.G. PULP	CU %	PB %	ZN %	AG(AA) G/MT	AG(FA) G/MT	AU(FA) G/MT	PO %	PY %	TOT FE	BAO %	HG %	MN %	AS %	BA %	S.G. W.R.
74.2	74.7		.5	.5		3.41	.09	5.70	4.70	62.00		.62	1	7	9						
75.9	88.0		12.1	11.9		3.56	.03	4.86	11.28	92.89	4.29	.54	2	8	11						
93.0	96.8		3.8	3.8		3.30	.01	1.33	4.14	22.52	4.10	.25	1	7	9						
98.6	102.1		3.5	2.9		2.96	.01	.88	2.24	18.57		.10	1	1	2						
180.8	188.9		8.1	7.5			.01	.03	.07	2.48											
291.1	297.3		6.2	6.2		3.57	.12	4.59	6.25	73.12		1.39	2	10	12						
321.2	327.2		6.0	3.3		3.43	.04	2.12	3.39	41.13		.80	2	15	17						

DDH: FAGA214 UTM-N: 905,321.7 UTM-E: 592,344.8 UTM-ELEV: 1,302.0 TOTAL DEPTH: 492.8 SECTION: W 80
RFE: RFE DIR: 230 PLUNGE ANGLES: 11 312 DHD CALC: 1 SS CALC: 0

DEPTH	ZENITH	AZIMUTH
0.000	180.000	0.000
69.500	176.000	203.000
120.400	171.000	111.000
181.400	168.500	117.000
242.300	165.000	110.500
303.300	163.000	124.000
364.200	162.000	119.000
425.200	161.000	110.000
486.200	160.000	111.000

DDH: FAGA214 UTM-N: 905,321.7 UTM-E: 592,344.8 UTM-ELEV: 1,302.0 TOTAL DEPTH: 492.8 SECTION: W 80
RFE: RFE DIR: 230 PLUNGE ANGLES: 11 312 DHD CALC: 1 SS CALC: 0

DEPTH	UNIT	CODE	DESC	RECOVERY	IND
15.8	0001	#		0.0	1
23.7	0002	5A6	(5A19)	0.0	1
24.5	0003	5A0	(5A19)	0.0	1
31.7	0004	4A0	->(5A319)	0.0	1
35.2	0005	5D*	(5A6)	0.0	1
37.9	0006	5A6	->5B62	0.0	1
39.7	0007	5B62	(5D*)	0.0	1
53.0	0008	5A6	&9	0.0	1
55.8	0009	4A4*	(5A6)(5D*)	0.0	1
56.1	0010	5D$		0.0	1
56.7	0011	5A61		0.0	1
64.0	0012	5A6		0.0	1
67.7	0013	5A61	(4A4)(4A0)	0.0	1
68.3	0014	4A0	(4E4) AT TOP	0.0	1
69.1	0015	5D*	(4D4)	0.0	1
69.5	0016	4D4	(5C*)	0.0	1
70.8	0017	5C3		0.0	1
71.5	0018	4C0		0.0	1
71.8	0019	5D3		0.0	1
72.2	0020	4C0	(4A41) 50:50	0.0	1
74.2	0021	5C3	(4A4) MINOR	0.0	1
74.7	0022	4D4	(4A41) AT BASE	0.0	1
75.9	0023	5C*		0.0	1
76.2	0024	4E4		0.0	1
76.6	0025	4A0		0.0	1
77.0	0026	4E4	(4E0) MINOR	0.0	1
78.0	0027	4A0	(4A4) AT TOP	0.0	1
80.9	0028	4E4*	(4A0)(5A0)	0.0	1
81.4	0029	4A0		0.0	1
82.5	0030	4E4	(4E0) AT TOP (4A4)	0.0	1
88.0	0031	4D4	(4A14)	0.0	1
93.0	0032	5A19		0.0	1
93.4	0033	4A41		0.0	1
94.1	0034	4A0		0.0	1
94.7	0035	4E4		0.0	1
95.4	0036	4A14		0.0	1
96.8	0037	4A0		0.0	1
98.6	0038	5A6	&981	0.0	1
102.1	0039	4A0	(5D*)	0.0	1
111.2	0040	5B35	(5D35) 50:50	0.0	1
117.6	0041	5B33		0.0	1
119.9	0042	5C3		0.0	1
137.8	0043	5B38		0.0	1
139.2	0044	5C35		0.0	1
146.1	0045	5B3	&8	0.0	1
150.9	0046	5C35		0.0	1
152.0	0047	5B38		0.0	1
157.0	0048	5C35	(5B38)(1000)	0.0	1
161.0	0049	5C35		0.0	1
166.2	0050	5B38		0.0	1
166.8	0051	5C35		0.0	1

DDH: FAGA214 UTM-N: 905,321.7 UTM-E: 592,344.8 UTM-ELEV: 1,302.0 TOTAL DEPTH: 492.8 SECTION: W 80
RFE: RFE DIR: 230 PLUNGE ANGLES: 11 312 DHD CALC: 1 SS CALC: 0

DEPTH	UNIT	CODE	DESC	RECOVERY	IND
167.6	0052	5B38	(10Q0)	0.0	1
169.7	0053	5B38		0.0	1
174.0	0054	5A68		0.0	1
177.7	0055	5A38	(10Q0)	0.0	1
180.8	0056	5A3	&139	0.0	1
188.9	0057	5A19	(4A0)(5A3) 60:40:MINOR	0.0	1
196.3	0058	5A3	&9 (5D3)(10Q0)	0.0	1
196.3	0059	5A6	(10Q0)	0.0	1
199.0	0060	5C35	BIOTITE	0.0	1
202.8	0061	5B6		0.0	1
204.1	0062	5C35	BIOTITE	0.0	1
205.1	0063	5B62		0.0	1
207.9	0064	5D3	(5B62)	0.0	1
210.5	0065	5A6	(5B628)(5D3)	0.0	1
222.2	0066	5B62	&&3	0.0	1
223.5	0067	5A6		0.0	1
224.5	0068	5B62		0.0	1
228.6	0069	5B62	(10Q0) 80:20	0.0	1
238.1	0070	5B62		0.0	1
238.4	0071	5C35	[5D5] MAYBE REALLY [3&3]	0.0	1
243.8	0072	5B62	(10Q0)	0.0	1
246.5	0073	5B62	(5D3)	0.0	1
259.3	0074	5B62	(10Q0) 90:10	0.0	1
262.7	0075	5A6	(5B62) 50:50	0.0	1
264.1	0076	5B62		0.0	1
264.5	0077	5D3	(5B62) 60:40	0.0	1
266.3	0078	5B62	(5A0)	0.0	1
269.7	0079	5A6	(5D3) 80:20	0.0	1
273.7	0080	5B62	(10Q0)	0.0	1
284.7	0081	5B6	&2&8	0.0	1
287.1	0082	5A6		0.0	1
288.8	0083	5B6	&4	0.0	1
290.1	0084	4L0		0.0	1
291.1	0085	4L1	(10Q0)	0.0	1
292.0	0086	4G4	(4E4#)	0.0	1
293.7	0087	4E4#		0.0	1
294.6	0088	4D0	(4D4) AT TOP (5D4*) AT TOP	0.0	1
295.0	0089	5D4@		0.0	1
295.9	0090	4C0	->4L4	0.0	1
297.3	0091	4L14		0.0	1
302.7	0092	5B61	&9	0.0	1
304.4	0093	5B4	(4L0)	0.0	1
307.9	0094	5B6	&4&1 (4L2) AT TOP	0.0	1
309.7	0095	4L2		0.0	1
310.9	0096	5B62		0.0	1
316.1	0097	4L0	(5B6 &8)	0.0	1
319.8	0098	5B6	&2&8 (10Q0) 80:20	0.0	1
321.2	0099	4L0	->(5B4)	0.0	1
325.5	0100	4E4	(4E0)(4L0)	0.0	1
326.5	0101	4A43		0.0	1
327.2	0102	4A4		0.0	1

DDH: FAGA214 UTM-N: 905,321.7 UTM-E: 592,344.8 UTM-ELEV: 1,302.0 TOTAL DEPTH: 492.8 SECTION: W 80
RFE: RFE DIR: 230 PLUNGE ANGLES: 11 312 DHD CALC: 1 SS CALC: 0

DEPTH	UNIT	CODE	DESC	RECOVERY	IND
328.4	0103	5A6		0.0	1
331.1	0104	5B61		0.0	1
331.9	0105	5A19	->4A00	0.0	1
335.9	0106	4L0		0.0	1
336.3	0107	5B26	->4A0	0.0	1
339.5	0108	4L0		0.0	1
349.4	0109	5B6	[3G0]	0.0	1
351.0	0110	4L2	(5B64)	0.0	1
354.9	0111	5B6	(5B62)	0.0	1
356.6	0112	5B64	[3G4]	0.0	1
362.0	0113	4L0	&2&7&$	0.0	1
371.9	0114	5B64	BIO.[3D8] START BIO IN PELITES	0.0	1
374.2	0115	4L21	BIOTITE	0.0	1
382.2	0116	5B68	[3G8] [3D8]	0.0	1
390.8	0117	5B38	[5B0 BIOTITE][3D86]	0.0	1
394.4	0118	5B6	BIOTITE [3G0]	0.0	1
402.2	0119	5B68	[3G8]	0.0	1
406.3	0120	5B62		0.0	1
407.0	0121	5B68		0.0	1
409.2	0122	5A6	(5D3) MINOR	0.0	1
409.6	0123	10Q0		0.0	1
411.0	0124	5A6		0.0	1
412.7	0125	5A6		0.0	1
413.5	0126	5A3	(5A38)	0.0	1
414.2	0127	5B6	BIOTITE	0.0	1
416.4	0128	5C6	[5D6]	0.0	1
417.5	0129	5B68	3 BIOTITE [5B68 &3]	0.0	1
420.2	0130	5C6	[5D6]	0.0	1
420.8	0131	5B26	(4L0)	0.0	1
421.3	0132	5C6	[5D6]	0.0	1
422.7	0133	5A6	(5B26)	0.0	1
424.3	0134	5C6	[5D6]IGN.TEXT OR C.G.MET.TEXT?	0.0	1
425.6	0135	5A3	(5D6) AT TOP	0.0	1
426.0	0136	5A6		0.0	1
431.1	0137	5C6	[5D6] &*	0.0	1
435.1	0138	5A6		0.0	1
435.2	0139	4L0	[1D4]	0.0	1
437.8	0140	4L0	[1D4] STAUR. ANDUL.	0.0	1
440.9	0141	5C6*	BIOTITE	0.0	1
442.9	0142	1D0	STAUR.	0.0	1
444.0	0143	5C6	[5D6]	0.0	1
444.5	0144	1D0		0.0	1
445.2	0145	10Q0	(1D0)	0.0	1
458.4	0146	1D0	GAR.,AND.,STAUR.	0.0	1
460.5	0147	1B0	[3F0]	0.0	1
461.5	0148	1B0	(10A0)	0.0	1
463.5	0149	10B7	KSP MEGACRYSTS,BIO.	0.0	1
463.7	0150	10B7		0.0	1
465.8	0151	1C0		0.0	1
467.7	0152	10C5	MUSC PEGMATITE	0.0	1
471.9	0153	1C0		0.0	1

DDH: FAGA214 UTM-N: 905,321.7 UTM-E: 592,344.8 UTM-ELEV: 1,302.0 TOTAL DEPTH: 492.8 SECTION: W 80
RFE: RFE DIR: 230 PLUNGE ANGLES: 11 312 DHD CALC: 1 SS CALC: 0

DEPTH	UNIT	CODE	DESC	RECOVERY	IND
478.3	0154	1C0		0.0	1
487.3	0155	1C0		0.0	1
492.8	0156	1087	KSP MEGACRYSTIC	0.0	1

DDH: FAGA214 UTM-N: 905,321.7 UTM-E: 592,344.8 UTM-ELEV: 1,302.0 TOTAL DEPTH: 492.8 SECTION: W 80
RFE: RFE DIR: 230 PLUNGE ANGLES: 11 312 DHD CALC: 1 SS CALC: 0

DDH	F DEPTH	T DEPTH	FEAT	SYMTRY	S0 ANGLE	S0 DIRECT	S1 ANGLE	S1 DIRECT	S2 ANGLE	S2 DIRECT	RFE CDE	DHDC	SDC	PROCESS
FAGA214	0.0	17.3	CS2	3	0	0	0	0	65	230	C	1	0	1
FAGA214	0.0	18.2	CS2	E	0	0	0	0	65	230	0	1	0	1
FAGA214	0.0	24.2	CS2	Z	0	0	0	0	60	230	0	1	0	1
FAGA214	0.0	26.0	CS2	3	0	0	0	0	60	230	0	1	0	1
FAGA214	0.0	31.7	CS2	Z	0	0	0	0	60	230	0	1	0	1
FAGA214	0.0	32.8	CS2	E	0	0	0	0	60	230	0	1	0	1
FAGA214	0.0	33.8	CS2	S	0	0	0	0	65	230	0	1	0	1
FAGA214	0.0	35.3	CS2	E	0	0	0	0	60	230	0	1	0	1
FAGA214	0.0	37.2	CS2	3	0	0	0	0	55	230	0	1	0	1
FAGA214	0.0	39.8	CS2	3	0	0	0	0	60	230	0	1	0	1
FAGA214	0.0	44.2	CS2	Z	0	0	0	0	70	230	0	1	0	1
FAGA214	0.0	46.1	PS2	P	0	0	0	0	20	230	0	1	0	1
FAGA214	0.0	49.7	PS2	P	0	0	0	0	30	230	0	1	0	1
FAGA214	0.0	51.8	CS2	Z	0	0	0	0	50	230	0	1	0	1
FAGA214	0.0	56.1	PS2	P	0	0	0	0	20	230	0	1	0	1
FAGA214	0.0	68.5	PS2	P	0	0	0	0	65	230	0	1	0	1
FAGA214	0.0	69.7	PS2	P	0	0	0	0	70	230	0	1	0	1
FAGA214	0.0	72.2	PS2	P	0	0	0	0	60	230	0	1	0	1
FAGA214	0.0	73.6	CS2	Z	0	0	0	0	60	230	0	1	0	1
FAGA214	0.0	77.4	CS2	Z	0	0	0	0	65	230	0	1	0	1
FAGA214	0.0	80.3	CS2	3	0	0	0	0	55	230	0	1	0	1
FAGA214	0.0	81.0	CS2	M	0	0	0	0	75	230	0	1	0	1
FAGA214	0.0	82.4	CS2	E	0	0	0	0	60	230	0	1	0	1
FAGA214	0.0	89.3	CS2	Z	0	0	0	0	70	230	0	1	0	1
FAGA214	0.0	90.8	CS2	Z	0	0	0	0	70	230	0	1	0	1
FAGA214	0.0	91.8	CS2	Z	0	0	0	0	70	230	0	1	0	1
FAGA214	0.0	93.7	CS2	S	0	0	0	0	70	230	0	1	0	1
FAGA214	0.0	95.6	CS2	S	0	0	0	0	70	230	0	1	0	1
FAGA214	0.0	96.5	CS2	D	0	0	0	0	75	230	0	1	0	1
FAGA214	0.0	99.8	CS2	3	0	0	0	0	60	230	0	1	0	1
FAGA214	0.0	103.0	PS2	P	0	0	0	0	50	230	0	1	0	1
FAGA214	0.0	105.7	PS2	P	0	0	0	0	65	230	0	1	0	1
FAGA214	0.0	107.1	PS2	P	0	0	0	0	70	230	0	1	0	1
FAGA214	0.0	110.3	CS2	3	0	0	0	0	70	230	0	1	0	1
FAGA214	0.0	112.0	CS2	M	0	0	0	0	60	230	0	1	0	1
FAGA214	0.0	113.9	CS2	S	0	0	0	0	60	230	0	1	0	1
FAGA214	0.0	115.4	CS2	S	0	0	0	0	60	230	0	1	0	1
FAGA214	0.0	117.5	CS2	S	0	0	0	0	60	230	0	1	0	1
FAGA214	0.0	120.0	PS2	P	50	270	0	0	70	230	0	1	0	1
FAGA214	0.0	127.2	PS2	P	0	0	0	0	70	230	0	1	0	1
FAGA214	0.0	133.0	PS2	P	0	0	0	0	70	230	0	1	0	1
FAGA214	0.0	135.6	CS2	M	0	0	0	0	80	230	0	1	0	1
FAGA214	0.0	136.5	CS2	S	0	0	0	0	75	230	0	1	0	1
FAGA214	0.0	140.1	CS2	3	0	0	0	0	80	230	0	1	0	1
FAGA214	0.0	142.5	CS2	3	0	0	0	0	80	230	0	1	0	1
FAGA214	0.0	145.8	CS2	S	0	0	0	0	65	230	0	1	0	1
FAGA214	0.0	148.4	CS2	3	0	0	0	0	65	230	0	1	0	1
FAGA214	0.0	151.2	CS2	3	0	0	0	0	70	230	0	1	0	1
FAGA214	0.0	154.0	PS2	P	0	0	0	0	70	230	0	1	0	1
FAGA214	0.0	157.2	PS2	P	0	0	0	0	70	230	0	1	0	1
FAGA214	0.0	160.2	PS2	P	0	0	0	0	75	230	0	1	0	1

DDH: FAGA214 UTM-N: 905,321.7 UTM-E: 592,344.8 UTM-ELEV: 1,302.0 TOTAL DEPTH: 492.8 SECTION: W 80
RFE: RFE DIR: 230 PLUNGE ANGLES: 11 312 DHD CALC: 1 SS CALC: 0

DDH	F DEPTH	T DEPTH	FEAT	SYMTRY	S0 ANGLE	S0 DIRECT	S1 ANGLE	S1 DIRECT	S2 ANGLE	S2 DIRECT	RFE CDE	DHDC	SDC	PROCESS
FAGA214	0.0	162.8	PS2	P	0	0	0	0	80	230	0	1	0	1
FAGA214	0.0	163.9	CS2	E	0	0	0	0	70	230	0	1	0	1
FAGA214	0.0	166.7	CS2	M	0	0	0	0	70	230	0	1	0	1
FAGA214	0.0	171.9	CS2	3	0	0	0	0	60	230	0	1	0	1
FAGA214	0.0	174.5	CS2	S	0	0	0	0	70	230	0	1	0	1
FAGA214	0.0	176.2	CS2	S	0	0	0	0	70	230	0	1	0	1
FAGA214	0.0	179.8	CS2	S	0	0	0	0	65	230	0	1	0	1
FAGA214	0.0	181.5	CS2	Z	0	0	0	0	65	230	0	1	0	1
FAGA214	0.0	185.2	CS2	E	0	0	0	0	65	230	0	1	0	1
FAGA214	0.0	187.2	CS2	S	0	0	0	0	65	230	0	1	0	1
FAGA214	0.0	194.5	PS2	P	0	0	0	0	70	230	0	1	0	1
FAGA214	0.0	198.8	PS2	P	0	0	0	0	40	230	0	1	0	1
FAGA214	0.0	203.7	PS2	P	0	0	0	0	70	230	0	1	0	1
FAGA214	0.0	214.3	CS2	Z	0	0	65	50	75	230	0	1	0	1
FAGA214	0.0	218.5	CS2	Z	0	0	0	0	55	230	0	1	0	1
FAGA214	0.0	224.7	CS2	Z	0	0	0	0	75	230	0	1	0	1
FAGA214	0.0	229.5	CS2	Z	0	0	0	0	80	230	0	1	0	1
FAGA214	0.0	231.9	CS2	Z	0	0	0	0	80	230	0	1	0	1
FAGA214	0.0	240.5	CS2	S	0	0	0	0	85	230	0	1	0	1
FAGA214	0.0	246.0	CS2		0	0	0	0	90	230	0	1	0	1
FAGA214	0.0	251.5	CS2	Z	0	0	0	0	80	230	0	1	0	1
FAGA214	0.0	257.1	CS2		0	0	0	0	90	230	0	1	0	1
FAGA214	0.0	262.5	CS2	D	0	0	0	0	70	230	0	1	0	1
FAGA214	0.0	269.3	CS2		0	0	0	0	90	230	0	1	0	1
FAGA214	0.0	274.1	CS2	Z	0	0	0	0	75	230	0	1	0	1
FAGA214	0.0	279.5	CS2	Z	0	0	0	0	70	230	0	1	0	1
FAGA214	0.0	287.6	CS2	Z	0	0	0	0	70	230	0	1	0	1
FAGA214	0.0	292.0		P	0	0	0	0	75	230	0	1	0	1
FAGA214	0.0	298.0	CS2	S	0	0	0	0	65	230	0	1	0	1
FAGA214	0.0	300.4	CS2	Z	0	0	0	0	80	230	0	1	0	1
FAGA214	0.0	305.9	CS2	S	0	0	0	0	80	230	0	1	0	1
FAGA214	0.0	312.4	CS2	S	0	0	0	0	75	230	0	1	0	1
FAGA214	0.0	316.5	CS2	Z	0	0	0	0	75	230	0	1	0	1
FAGA214	0.0	320.0	PS2		0	0	0	0	75	230	0	1	0	1
FAGA214	0.0	327.0	CS2	Z	0	0	0	0	70	230	0	1	0	1
FAGA214	0.0	332.5	CS2	Z	0	0	0	0	60	230	0	1	0	1
FAGA214	0.0	341.2	CS2	Z	0	0	0	0	75	230	0	1	0	1
FAGA214	0.0	347.5	CS2	Z	0	0	0	0	70	230	0	1	0	1
FAGA214	0.0	351.5	CS2	D	0	0	0	0	80	230	0	1	0	1
FAGA214	0.0	358.0	PS2		0	0	0	0	75	230	0	1	0	1
FAGA214	0.0	363.6	CS2	S	0	0	0	0	60	230	0	1	0	1
FAGA214	0.0	369.3	CS2	Z	0	0	0	0	80	230	0	1	0	1
FAGA214	0.0	375.8	CS2	Z	0	0	0	0	70	230	0	1	0	1
FAGA214	0.0	381.2	PS2		0	0	0	0	65	230	0	1	0	1
FAGA214	0.0	387.7	PS2		0	0	0	0	70	230	0	1	0	1
FAGA214	0.0	394.5	PS2		0	0	0	0	80	230	0	1	0	1
FAGA214	0.0	399.5	PS2		0	0	0	0	80	230	0	1	0	1
FAGA214	0.0	403.8	PS2		0	0	0	0	75	230	0	1	0	1
FAGA214	0.0	408.6	PS2		0	0	0	0	75	230	0	1	0	1
FAGA214	0.0	415.6	PS2		0	0	0	0	75	230	0	1	0	1
FAGA214	0.0	425.5	CS2	Z	0	0	0	0	80	230	0	1	0	1

DDH: FAGA214 UTM-N: 905,321.7 UTM-E: 592,344.8 UTM-ELEV: 1,302.0 TOTAL DEPTH: 492.8 SECTION: W 80
RFE: RFE DIR: 230 PLUNGE ANGLES: 11 312 DHD CALC: 1 SS CALC: 0

DDH	F DEPTH	T DEPTH	FEAT	SYMTRY	S0 ANGLE	S0 DIRECT	S1 ANGLE	S1 DIRECT	S2 ANGLE	S2 DIRECT	RFE CDE	DHDC	SDC	PROCESS
FAGA214	0.0	431.0	PS2		0	0	0	0	65	230	0	1	0	1
FAGA214	0.0	436.5	PS2		0	0	0	0	65	230	0	1	0	1
FAGA214	0.0	443.0	PS2		0	0	0	0	50	230	0	1	0	1
FAGA214	0.0	448.9	PS2		0	0	0	0	55	230	0	1	0	1
FAGA214	0.0	452.4	PS2		0	0	0	0	80	230	0	1	0	1
FAGA214	0.0	465.5	PS2		0	0	0	0	40	230	0	1	0	1
FAGA214	0.0	472.4	PS2		0	0	0	0	35	230	0	1	0	1
FAGA214	0.0	476.4	PS2		0	0	0	0	30	230	0	1	0	1
FAGA214	0.0	486.0	CS2	M	0	0	0	0	80	230	0	1	0	1

DDH: FAGA214 UTM-N: 905,321.7 UTM-E: 592,344.8 UTM-ELEV: 1,302.0 TOTAL DEPTH: 492.8 SECTION: W 80
RFE: RFE DIR: 230 PLUNGE ANGLES: 11 312 DHD CALC: 1 SS CALC: 0

DDH	F DEPTH	T DEPTH	FEAT	REC CD	PARLL	UPPER PLANE		INTERNAL PLANE		LOWER PLANE		DHD
FAGA214	18.9	19.0	GC?			0	0	0	0	0	3	1
FAGA214	23.4	23.7	R			0	0	C	0	0	0	1
FAGA214	0.0	37.9	1G			0	0	55	0	0	3	1
FAGA214	0.0	40.8	1G			0	0	60	C	0	3	1
FAGA214	0.0	41.8	1G			0	0	60	0	0	3	1
FAGA214	45.0	46.0	R			0	0	C	0	0	0	1
FAGA214	0.0	48.8	1G			0	0	30	0	0	3	1
FAGA214	0.0	52.9	1G			0	0	50	0	0	3	1
FAGA214	53.0	55.8	XGB	3		50	0	C	0	20	3	1
FAGA214	58.2	60.0	XGB	1		0	0	0	0	0	3	1
FAGA214	60.0	64.0	N			0	0	0	0	0	3	1
FAGA214	66.4	67.1	XGB			0	0	70	0	0	3	1
FAGA214	67.8	68.3	XGB			0	0	70	0	0	3	1
FAGA214	0.0	79.1	1G			0	0	C	0	0	3	1
FAGA214	84.1	87.5	X1F			0	0	90	0	0	0	1
FAGA214	0.0	88.0	1G			0	0	C	0	0	3	1
FAGA214	0.0	88.8	1G			0	0	70	0	0	3	1
FAGA214	0.0	89.3	1G			0	0	C	0	0	3	1
FAGA214	0.0	98.4	1G			0	0	0	0	0	3	1
FAGA214	0.0	101.9	1G			0	0	C	C	0	3	1
FAGA214	120.2	120.9	G			50	270	C	0	0	3	1
FAGA214	122.2	125.0	GP	5		0	0	0	0	0	3	1
FAGA214	0.0	129.9	1G			0	0	0	0	0	3	1
FAGA214	0.0	130.0	1G			0	0	0	0	0	3	1
FAGA214	148.5	148.7	G			0	0	C	0	0	3	1
FAGA214	167.6	169.7	GPF	2		0	0	0	0	0	3	1
FAGA214	0.0	177.7	1G			0	0	70	0	0	3	1
FAGA214	178.6	178.9	G			65	0	0	0	65	0	1
FAGA214	180.1	180.3	X			0	0	0	0	0	0	1
FAGA214	0.0	188.8	1G			0	0	65	0	0	0	1
FAGA214	191.4	193.8	BP	3		0	0	0	0	0	0	1
FAGA214	199.0	202.8	NM			0	0	0	0	0	0	1
FAGA214	0.0	205.1	1G			0	0	C	0	0	0	1
FAGA214	207.0	207.4	G			0	0	0	0	0	0	1
FAGA214	0.0	224.5	1G			0	0	0	C	0	0	1
FAGA214	0.0	238.0	1G			0	0	55	C	0	0	1
FAGA214	266.8	267.0	BG			0	0	C	0	0	0	1
FAGA214	0.0	297.3	G			0	0	65	0	0	0	1
FAGA214	303.3	304.3	G			0	0	C	C	80	0	1
FAGA214	0.0	313.2	1G			0	0	75	230	0	0	1
FAGA214	318.4	318.6	G			45	260	C	0	40	C	1
FAGA214	321.2	325.5	MC			0	0	C	C	0	0	1
FAGA214	0.0	327.2	1G			0	0	70	0	0	0	1
FAGA214	327.2	331.1	GS			70	0	0	0	60	0	1
FAGA214	331.9	335.9	GS			0	0	30	50	0	0	1
FAGA214	336.3	339.3	BG			0	C	75	C	C	0	1
FAGA214	339.3	339.5	G			0	0	0	0	0	0	1
FAGA214	0.0	353.9	1G			0	0	C	C	0	0	1
FAGA214	354.9	356.5	GB			50	0	C	C	0	C	1
FAGA214	411.0	412.7	1G			75	0	C	0	75	0	1
FAGA214	431.1	435.1	1G			65	0	C	C	65	0	1

DDH: FAGA214 UTM-N: 905,321.7 UTM-E: 592,344.8 UTM-ELEV: 1,302.0 TOTAL DEPTH: 492.8 SECTION: W 80
RFE: RFE DIR: 230 PLUNGE ANGLES: 11 312 DHD CALC: 1 SS CALC: 0

DDH	F DEPTH	T DEPTH	FEAT REC CD	PARLL	UPPER PLANE		INTERNAL PLANE		LOWER PLANE		DHD
FAGA214	435.1	435.2	G3F		65	0	0	0	65	0	1
FAGA214	445.2	458.4	1G		0	0	0	0	0	0	1
FAGA214	458.4	460.5	D		0	0	0	0	0	0	1
FAGA214	460.5	461.5	G		0	0	0	0	0	0	1
FAGA214	463.5	463.7	G		0	0	0	0	40	0	1

CYPRUS ANVIL MINING CORPORATION

DIAMOND DRILL CORE LOG

Date: 4 SEP 81

Hole Number: FAGA 214 (81-A214)

Project: GRUM 1981 DRILLING

Location: VANGORDA PLATEAU

Claim:

~~Terr. Plane~~ UTM Co-ords.: 6905321.7 N

592 344.8 E

Grid Co-ords: 80W

13N

Elevation: 1302.0

Total Depth: 492.8 metres.

Reference Fabric Orientation Diagram:

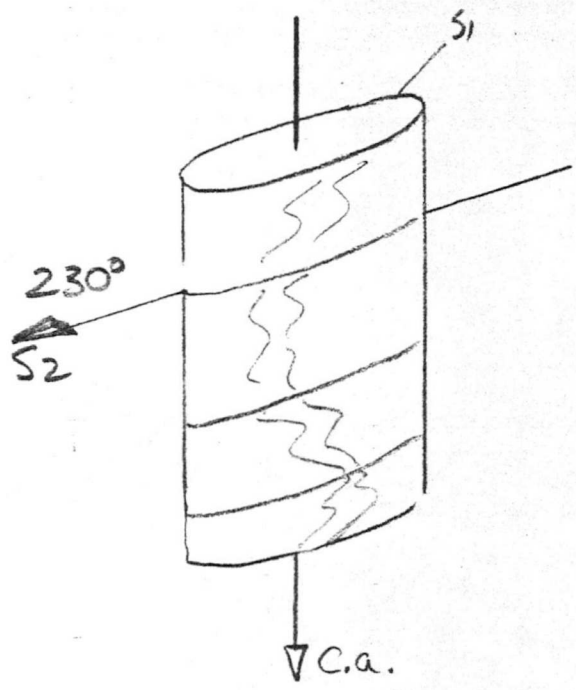

All symmetry determinations looking NW with S2 dipping SW with dip azimuth 230°.

Purpose: To Aid interpretation of structure and define ore on section 80W

Reason hole Terminated:

Logged by: RST

Date(s) Logged: 4 SEP 81

Drilling Contractor: Arctic Diamond Drilling

Size	CORE From	To
NQ		

Collar Cased and Capped:

Hole Cemented: DSJ - RST.

Steel down hole:

Started: August 31/81 Completed:

Cyprus Anvil Mining Corp. Page 2 of 16

DDH FAGA214 (2–8)

Diamond Drill Core Log Date: 4SEP81 Logged By: RST

Code	Drillhole	Elevation	Northing	Easting	Units (feet/metres)	R.F.E.	
1	2 8	10 16	17 24	25 32	34 39	41 42	
T	FAGA214	1392.0	9053217.	5923448	metres	S2	

Code	Drillhole	Depth	Zenith Angle	True Azimuth	Comments
1	2 8	10 14	22 26	28 32	34 56
R	FAGA214	0	180.0	0.0	ATCOLLAR R
R	FAGA214	1052	175.0		H
R	FAGA214	1463	172.0		ACID DIP R x
R	FAGA214	1820	169.0		36 H
R	FAGA214	2912	169.0		19 R
R	FAGA214	2246	166.0		23 H x
R	FAGA214	2560	166.0		32 R x
R	FAGA214	2835	166.0		27 H
R	FAGA214	3161	164.0		33 R x
R	FAGA214	3280	164.0		12 H
R	FAGA214	3520	163.0		24 R
R	FAGA214	3834	163.0		31 H x
R	FAGA214	4097	163.0		26 R x
R	FAGA214	4319	162.0		22 H
R	FAGA214	4636	160.0		
R	FAGA214	4898	160.0		
		695	176.0	203.0	SPERRY-SUN
		1204	171.0	111.0	
		1814	168.5	117.0	
		2423	165.0	110.5	
		3033	163.0	124.0	
		3642	162.0	119.0	
		4252	161.0	110.0	
		4862	160.0	111.0	

(DISCARD) ACID DIP TESTS

27m – 25m

Code	Drillhole	Comments, Errant Remarks, Snivellings and / or Lewd Suggestions
1	2 8	10 56

C.A.M.C. 1981 – E-2

DDH FAGA214 (2 … 8)

Cyprus Anvil Mining Corp.

Lithologic Log

Date: Sept 4/81 Logged By: RST

180
1.3
1.7
180
8
172

Code	From	To	Recov.	No.	Unit	Description
1	10 … 14	16 … 20	22 … 24	26 … 28	30 … 34	35
L	00	158		1	*	Casing overburden
L	158	237		2	5A6	(5A19) Good black graphitic phyllite; narrow widely spaced SiO_2 partings i py; 18·9-19·0 sandy gouge poss cave meth.
L	237	245		3	5A0	calcareous (5A19) graphitic
L	245	317		4	4A9	(5A319) ; to 26·2 is 4A0 graphitic rest is interbanded transitional rock 5A319 ↔ 4A0.
L	317	352		5	5D*	(5A6) starts with narrow interbands 1-2cm 5D-5A over 0·7m ; then 5D* @ 33·5-33·9, 33·9-34·3 34·5-35·2. rest is laminated type 5A.
L	352	379		6	5A6	approach 5B62 minor py, a few SiO_2 bands. 0·1m gouge @ lowermost.
L	379	397		7	5B62	(5D*) chloritic 5D3 @ starts 0·2m, 38·6 (0·1m) and end 0·3m. 5D3 very weakly reactive to 1/8 HCl
L	397	530		8	5A6	±9 black graphitic phyllite veinlets thruout i py minor SiO_2. Gouge @ 40·8 (0·1m) 41·8 (0·1m) 48·8 (0·1m) 52·9 (0·1m) 5ab // SZ. Broken core
L	530	558		9	4A4*	(5A6, 5D*) Bx gouge (0·7m Rec) 5A gouge at start and middle of unit
L	558	561		10	5D*	dolomitic.
L	561	567		11	5A61	minor SiO_2 bands
L	567	640		12	5A6	Gouge bx. tricored. 60 ± 64 m no rec due to tricoring; 58·2-60·0 (0·3m rec) gouge and bx.
L	640	677		13	5A61	(4A4, 4A0) 4A0 at start (0·1m) 4A4 as narrow 0·1m bands at 65·5, 66·3; Gouge bx @ 66·4 to 67·1m. broken sharp lower cnt
L	677	683		14	4A0	(4E4) 0·1m 4E4 @ start Bxd gouge 4A0 over rest lower cnt gouge // SZ
L	683	691		15	5D*	(4D4) weird. bxtd upper cnt. . 2 less than 0·1m bands 4D4 over ½ of unit in green chloritic phyllite
L	691	695		16	4D4	(5C*) 0·05m band 5C in middle.
L	695	708		17	5C3	green chloritic. Vestiges? of chlorite filled amygdules.
L	708	715		18	4C0	nb. green chert band (0·1m) @ 71·0 m
L	715	718		19	5D3	green chloritic phyllite

DDH FAGA214 (2 — 8)

Cyprus Anvil Mining Corp.

Lithologic Log

Date: Sept 4/81 Logged By: RST

Code	From	To	Recov.	No.	Unit	Description
1	10 — 14	16 — 20	22 — 24	26 — 28	30 — 34	35
L	7.18	7.22		20	4D0	/4A41 1st ½ 4D0 2nd ½ 4A41
L	7.22	7.42		21	5C3	/4A4 3cm 4A4 in middle of unit.
L	7.42	7.47		22	4D4	(4A4) 0.1m 4A41 @ end of unit.
L	7.47	7.69		23	5C*	chloritic to weakly altered 5C weakly calcareous fuchsite blebs near end. sharp lower cnt //S2
L	7.59	7.62		24	4E4	>10% Pb+Zn
L	7.62	7.66		25	4A0	
L	7.66	7.70		26	4E4	(4E0) 0.1m of 4E0
L	7.70	7.80		27	4A0	(4A4) upper 0.3m is 4A4 some py bands 5cm and massive
L	7.80	8.09		28	4E4*	(4A0, 5A0) 4A0 @ 78.3-78.7 (fold nose) and as two narrow 0.1m bands @ 79.5 & 80.3 at 80.7 appear as tho' clasts in sulphide dominant matrix. 5A0 gouge (0.1m) @ 79.1
L	8.09	8.14		29	4A0	
L	8.14	8.25		30	4E4	(4A4, 4E0) 0.2m 4E0 @ start, 4A4 as narrow bands.
L	8.25	8.80		31	4D4	(4A14) interbanded high grade; high SiO_2 4A4 +10% Pb+Zn overall. gouge lower cnt.
L	8.80	9.30		32	5A19	black graphitic phyllite w/ py clasts. 5A gouge at 88.0 (0.1m), 88.8 (3cm //S2), 89.3 (4cm)
L	9.30	9.34		33	4A41	
L	9.34	9.41		34	4A0	
L	9.41	9.47		35	4E0	red brown sph. occurs as narrow lams along S2 minor py lams also
L	9.47	9.54		36	4A14	Very high grade 4A thick 2cm sulphide bands
L	9.54	9.68		37	4A0	only minor pyrite
L	9.68	9.86		38	5A6	±9±1 gradational over 1 metre from weakly pyritic graphitic phyllite to black graphitic phyllite
L	9.86	10.21		39	4A4	(5D*) instead of pyritic SiO_2 essentially sph+gn SiO_2 bands. 5D* as 6 narrow green chloritic bands in middle of unit. Largest 0.1m avg 4cm. gouge (0.1m) 0.2m from end.
L	10.21	11.12		40	5B35	/5D35 50:50 interbanded. avg 0.5m

gouge @ 98.24m

DDH FAGA214 (2–8)

Cyprus Anvil Mining Corp.

Lithologic Log

Page 5 of 16

Date: Sept 4/81 Logged By: PST

Code	From	To	Recov.	No.	Unit	Description
1	10–14	16–20	22–24	26–28	30–34	35
L	1112	1176		41	5B38	strongly calcareous variably chloritic
L	1176	1199		42	5C3	mott. Green chloritic phyllite. Reminent?
						chloritic amygdules. Calcite bands.
L	1199	1378		43	5B38	strongly calcareous variably chloritic. Gouge
						@ 120.2-120.9 (50% gouge), 122.2-125.0 (50%
						gouge - 0.9m Rec), 129.9 (0.05m), 130.0 (0.05m)
L	1378	1392		44	5C35	strongly calcareous; chlorite - Calcite bands laminated
L	1392	1461		45	5B3	±8 similar to units 41 & 43 less chlorite
L	1461	1509		46	5C35	as unit 44 Gouge 148.5-148.7 (50% gouge)
L	1509	1520		47	5B38	as units 41, 43,
L	1520	1570		48	5C35	(5B38, OQO) 0.1m qtz veins //S2 @ 152.5, 154.4
						5B38 at top, middle, bottom of unit < 0.4m each
L	1570	1610		49	5C35	strongly calc as units 44, 46
L	1610	1662		50	5B38	as units 41, 42 5% of chlorite converted to biotite
L	1662	1668		51	5C35	as unit 44, 46, 48
L	1668	1676		52	5B38	(OQO) Qtz veining 167.1-167.5 and last metre
						calcite also in vein chlorite in vein areas
						converted partially to biotite.
L	1676	1697		53	5B38	Gouge (0.3m Rec)
L	1697	1740		54	5A68	Abrupt change in lithology below fault.
						Calc assoc. with fractures, veinlets. minor
						chlorite lams. Some → biotite.
L	1740	1777		55	5A38	(OQO) minor qtz veins. chlorite close to veins
						some → biotite 0.05m gouge //S2 @ lower cnt
L	1777	1808		56	5A3	±1±9 strongly calcareous; gouge & bx @ 178.6-
						178.9 //S2, crackle bx. 180.1-180.3. minor
						py.
L	1808	1889		57	5A19	(4AO, 5A3) Mixed transitional unit. About
						40% of unit 4AO nearer bottom. Also minor
						narrow 5A3 bands. 0.05m gouge 0.1m from end
						//S2
L	1889	1963		58	5A3	±9 (5D3, OQO) minor py <5%. Qtz veins at
						189.8 (0.1m), 190.0, 193.4 (0.2m) weakly
						altered 5D3 @ 191.4 (0.2m); 191.4-193.8
						broken core (0.6m Rec)
L	1963	1983		59	5A6	(OQO) 50% qtz veining with assoc biotite and

DDH FAGA214 (2 — 8)

Cyprus Anvil Mining Corp.

Lithologic Log

Date: Sept 4/81 Logged By: PST

Code	From	To	Recov.	No.	Unit	Description
1	10 14	16 20	22 24	26 28	30 34	35
						hard green mineral poss. chert or diopside?
L	1983	1990		60	5C35	Calcareous weakly banded with 40% chlorite
						→ biotite. NB biotite especially course 90% of time peripheral to Calcite bands.
L	1990	2028		61	5B6	? one small peice ⇒ mislatch 0.1m Rec.
L	2028	2041		62	5C35	as unit 60 30% of chlorite → biotite
L	2041	2051		63	5B62	Gouge (3cm) @ lower cnt.
L	2051	2079		64	5D3	(5B62) Gouge @ 207.0-207.4 40° to c.a ć 5B62 in gouge. Also 5B62 @ 207.3-207.5
L	2079	2106		65	5A6	(5B628, 5D3) minor chlorite lams @ 0.2m 5D3 @ end of unit.
L	2106	2222		66	5B62	±8±3 chlorite as unit 65. CO_3 in fracs. & along S2
L	2222	2235		67	5A6	laminated
L	2235	2246		68	5B62	finely laminated. Gouge 0.1m from end 45° to c.a.
L	2246	2286		69	5B62	(OQO) 20% veined as 5cm veins Qtz & minor calc. in veins. Chlorite also assoc. with veins; all more or less ⊥ to c.a
L	2286	2381		70	5B62	laminated gouge @ end of unit 0.1m // S2
L	2381	2384		71	5C35	chlorite, calc. banded [5D3]
L	2384	2438		72	5B62	(OQO) 0.2m qtz vein @ start & 6 avg 4cm over last metre.
L	2438	2465		73	5B62	(5D3) narrow 0.1m bands 5D3 at start and end of unit
L	2465	2593		74	5B62	(OQO) 10% of unit qtz veins + minor CO_3 also minor CO_3 on fractures.
L	2593	2627		75	5A6	(5B62) 50:50. more 5A6 towards bottom of unit. lower cnt qtz vein.
L	2627	2641		76	5B62	
L	2641	2645		77	5D3	(5B62) 60:40 interbands
L	2645	2663		78	5B62	(5A6)
L	2663	2697		79	5A6	(5D3) Bx & gouge at 266.8-267.0 5D3 as narrow 0.1m bands 20% of unit.
L	2697	2737		80	5B62	(OQO) 0.2m qtz vein at start and end of unit.
L	2737	2847		81	5B6	±2±8 20% chlorite laminations, carbonaceous variably.

DDH F.A.G.A.2.1.4 (2–8)

Cyprus Anvil Mining Corp.

Lithologic Log

Page 7 of 16

Date: Sept 8 Logged By: RST

Code	From	To	Recov.	No.	Unit	Description
1	10–14	16–20	22–24	26–28	30–34	35
L	284 7	287 1		82	5A6	Banded
L	287 1	288 8		83	5B6	±4 transitional unit between 82 & 84
L	288 8	290 1		84	4L0	
L	290 1	291 1		85	4L1	(0Q0) 0.3m qtz vein in middle of unit
						3cm qtz vein at end.
L	291 1	292 0		86	4G4	(4E4*) 4G4 @ top and bottom of unit 60%
						calcareous blebs to 1.0cm avg less. Thru out.
						approaching 4K
L	292 0	293 7		87	4E4*	Similar CO_3 blebs to v. 86. Also minor CO_3 in matrix.
L	293 7	294 6		88	4D0	(4D4, 5D4*) 0.1m 5D4* 0.3m from start 4D4
						over 1st 3rd of unit. 6% Pb+Zn overall.
L	294 6	295 0		89	5D4*	ankeritic, fuchsitic
L	295 0	295 9		90	4C0	sericitic < 2% Pb+Zn; non-pyritic → 4L4
L	295 9	297 3		91	4L14	1-2% Pb+Zn substially more sericite than 90 gouge // S_2 low cut
L	297 3	302 7		92	5B61	±9 occasional minor py. 1-2%.
L	302 7	304 4		93	5B4	(4L0) transitional unit Gouge 303.3 to 304.3 lower cont // S_2, upp indeterminate
L	304 4	307 9		94	5B6	±4±1 (4L2) transitional unit; 4L2 304.4-305.3
L	307 9	309 7		95	4L2	py on S_2 to 1cm over last 0.3m
L	309 7	310 9		96	5B62	
L	310 9	316 1		97	4L0	(5B6±8) Mixed unit chlorite near qtz veinlets.
						313.2 gouge // S_2
L	316 1	319 8		98	5B6	±2±8 (0Q0) 20% qtz veins avg 3cm // S_2
						minor CO_3 in veins + chlorite; gouge 318.4-318.6 upper contact 45°/260° lower " 40°/0°
L	319 8	321 2		99	4L0	(5B4) transitional unit mixed.
L	321 2	325 5		100	4E4	(4E0, 4L0) MISLATCH;; 324.3 – 324.5 redrilled
						mush; Assays will not represent unit.
L	325 5	326 5		101	4A43	35% pyrite wispy graphitic bands
L	326 5	327 2		102	4A4	+7% Pb+Zn becoming greater graphite content
						towards end of unit. 0.1m gouge // S_2 lower cut.
L	327 2	328 4		103	5A6	sheared & gouged // S_2 } entire interval
L	328 4	331 1		104	5B61	" " " " " } sheared // S_2 no individual gouge zone
L	331 1	331 9		105	5A19	approaching 4A0 no base metal sulfs.
	331 9	335 9		106	4L0	sheared & gouged core; upper & lower
						contacts indeterminate; both gouge &
						sheared, broken core; internal gouge zones
						≈ 30°/50° — prob. meaningless

DDH FAGA214 (2–8)

Cyprus Anvil Mining Corp.

Lithologic Log

Date: 12 Sept. 81 Logged By: [illegible]

Code	From	To	Recov.	No.	Unit	Description
1	10–14	16–20	22–24	26–28	30–34	35
L	3359	3363		107	5B2619	⇒ 4A0
	3363	3395		108	4L0	many gouge zones & broken core thru interval plurality of gouge // S_2 incl 15 cm. gouge ending at 339.45, lower contact & upper contact indeterminate
L	3395	3419		109	5B64	[3G0]
L	3419	3510		110	4L2	[illegible] (5B64)
L	3510	3549		111	5B64	(5B62); broken core & gouge 353.8–353.9 no attitudes possible; 1cm gouge // S_2 @ 353.5M
L	3549	3566		112	5B64	[3G4]; gouge & broken core over interval; excellent upper contact 50°/0° where fault dips same direction as S_2 but more steeply; lower contact indeterminate; much internal gouge // & steeper than S_2
L	3566	3620		113	4L0	±2±7±* dolomite
L	3620	3719		114	5B64	musc + bio ± chlorite phyllite transitional to schist wkly altered; unit marks first appearance of biotite in hole; [3D8]
L	3719	3742		115	4L21	biotitic
L	3742	3822		116	5B68	[3G8]; [3D8 chloritic] i.e. rk is a lt med. gray green, non-calc musc-chlor phyll ⇒ schist
L	3822	3908		117	5B38	strongly biotitic; unit is dk. brown, med. calc bio >> chlor-calcite phyll. to schist; looks like patchily calc 5B0 @ biotite grad.; [5B0 biotitic] [3D86]
L	3908	3944		118	5B6	biotitic; much less biotitic than #117 i.e. bio + musc + chlor phyll/schist; [5C6], [3G0]
L	3944	4012		119	5B68	[3G8] c.f. unit 116
L	4012	4063		120	5B62	m. dk. gray, non-calc. phyll.
L	4063	4070		121	5B68	as # 116, 119
L	4070	4092		122	5A6	w/ 0.1M 5D3 band @ 408.3M
L	4092	4096		124	PQ0	bull qtz vein/pod.; no atts.
L	4096	4110		125	5A6	

DDH FAGA214 (2–8)

Cyprus Anvil Mining Corp.

Lithologic Log

Page 9 of 16

Date: 12 Sept 81 Logged By: [illegible]

Code	From	To	Recov.	No.	Unit	Description
1	10–14	16–20	22–24	26–28	30–34	35
L	4110	4127		126	5A6	incipiently gouged ∥ S_2 over entire interval;
L	4127	4135		127	5A3	(5A38)
L	4135	4142		128	5B6	biotitic; lt. gray & brown (bio) banded non-calc. phyll. w/ few v. thin OQO sweats
L	4142	4164		129	5C6	m. dk. yell. green, massive, non-calc. metabasite w/ no 5D/F "apron"; banded [5D6]
L	4164	4175		130	5B683	biotitic; well banded, patchily calcareous dk. brown, m. green, & lt. gray banded phyllite; prograde ≡ to 5B63
L	4175	4202		131	5C6	as #129 w/ strong banding ∥ S_2; relict ign. text [5D6]
L	4202	4208		132	5B26	(4L0) minor 0.5 cm. py bands @ 420.5
L	4208	4213		133	5C6	as #129, 131; no 5D0; relict ign. porphyritic texture [5D6]
L	4213	4227		134	5A6	(5B26)
L	4227	4243		135	5C6	as previous units 129, 131, 133; interleaving of this lithology w/ graphitic pelites below (unit 136) ⟹ possible tuffaceous origin for all units called 5C; "relict ign. texture" may be prograde clino-amphibole porphyroblasts; [5D6] alternate interpretation favored i.e. 5D
L	4243	4256		136	5A3	(5D6); 1-2 cm. thick 5D6 interleaved for top 0.3 M of interval
L	4256	4260		137	5A6	
L	4260	4311			5C6	[5D6] see comments #135; 430.7–431.1 is carbonated w/ white dolomite — could be " , vesiculated flow top ?? or 5D* / 5F* (more likely) SHIT ITS COLD!! quit sniveling!
L	4311	4351		138	5A6	numerous incipient gouge zones ∥ S_2
L	4351	4352		139	4L0	[1D4] gouge ∥ S_2; thrust fault?
L	4352	4378		140	4L0	[1D4] staurolitic w/ v. minor andalusite largely a qtz-musc-staur ± bio ± and finely x line schist
L	4378	4409		141	5C6	biotitic; highly fractured & carbonated

DDH FAGA214 (2–8)

Cyprus Anvil Mining Corp.

Lithologic Log

Date: 12 Sept. 81 Logged By: [signature]

Code (1)	From (10–14)	To (16–20)	Recov. (22–24)	No. (26–28)	Unit (30–34)	Description (35)
L	4409	4429		142	1DQ	muscovitic, non-carbonaceous; qtz-musc>bio staur. schist; staur & qtz define lamellar monomineralic bands
L	4429	4440		143	5C6	[5D6] minor siliceous bands favor 5D
L	4440	4445		144	1DO	muscovitic & chloritic
L	4445	4452		145	1OQO	(1DO muscovitic)
L	4452	4584		146	1DO	musc >> bio ± gar ± and ± staur schist; upper 1/3 of unit is staur. bearing, middle 1/2 of unit is andalusite " , remainder is garnetiferous; entire interval incipiently gouged
L	4584	4605		147	1BO	[3FO] m. gray & white, thinly banded finely xlline calcitic marble heavily brxiated
L	4605	4615		148	1DO	(10AO) gouge; heavily altered & gouged 1DO w/ 10AO dikes cutting gouge; no atts. poss.
L	4615	4635		149	1OB7	biotitic w/ 0.5-1.0 cm. k-spar megacrysts
L	4635	4637		150	1OB7	?? gouge; white kaolinitic gouge?? no attitude on upper contact, lower contact ≈ 11 S_2
L	4637	4658		151	1CD	biotite mottled variant; musc >> bio
L	4658	4677		152	1OC5	musc.-bearing peg. to csely xlline granite cream in color
L	4677	4719		153	1CD	biotite mottled c.f. 151 but more biotitic w/ bio >> musc; bio ≡ v. dk. brown
L	4719	4783		154	1CO	biotitic; dk. brown bio >>> musc + gar + qtz + plag schist to gneiss; mod. banding w/ SiO_2
L	4783	4878		155	1CD	migmatitic w/ 10CO + 10C5 "sweats" thruout; unit is mottled dk. brown bio > musc schist w/ light colored musc (kaolinite??) patches; light colored phyllosilicates tend to devel. along fractures — kaolinite??
L	4878	4928		156	1OB7	normal, med. xlline kspar megacrystic bio-qtz monz. of Anvil Batholith; 1cm " gradational intrusive contact

Hole ≈ 175' short

EOH

F GA214 8

Cyprus Anvil Mining Corp.

Structural Log

Date: Sept 5/81 Logged By: PBT

From	To	Feature	Sym	S_0 Dip Direct.	S_1 Dip Direct.	S_2 Dip Direct	Description
	17 3	CS2	E			65 2310	
	182	CS2	E			65	
34	237						rubble
	24 2	CS2	E			60	
	260	CS2	E			60	
	317	CS2	E			60	
	328	CS2	E			60	
	338	CS2	E			65	
	353	CS2	E			60	
	372	CS2	E			55	Gouge @ 38.0 // S2
	398	CS2	E			60	
	409						Gouge // S2
09	480	FRC		90	000		S0 = fractures oth // by sealed
	442	CS2	E			70	
5	460						Rubble
	461	IND	P			20	
	487						gouge sub // S2
	497	IND	P			30	
	518	CS2	E			50	
29	558						Gouge & bx zone sub // S2
	561	IND	P			20	
	685	IND	P			65	
58	711						~~65~~ Gouge bx // S2
	697	IND	P			70	
	722	IND	P			60	
	736	CS2	E			60	
	774	CS2	E			65	
	803	CS2	S			55	
	810	CS2	M			75	
	824	CS2	E			60	
1	875	FRC	R	90	00	50	FRC & weak development of bx
	893	CS2	E			70	Gouge here ? orientation.
	908	CS2	E			70	
	918	CS2	E			70	
	937	CS2	S			70	
	956	CS2	S			70	

DDH FAGA214 (2–8)

Cyprus Anvil Mining Corp.

Structural Log

Date: Sept 5/81 Logged By: RST

Code	From	To	Feature	Sym	S_0 Dip Direct.	S_1 Dip Direct.	S_2 Dip Direct	Description
1	10–14	16–20	22–24	26	28–32	34–38	40–44	
S		965	INDD	D			75 230	
S		998	CS2	3			60	
S		1030	INDD	P			50	
S		1057	INDD	P			65	
S		1071	INDD	P			70	
S		1103	CS2	3			70	
S		1120	CS2	M			60	
S		1139	CS2	S			60	
S		1154	CS2	S			60	
S		1175	CS2	S			60	
S		1200	INDD	P	50 270		70	So HWJ fault zone to 125·0
S		1272	INDD	P			70	
S		1330	INDD	P			70	
S		1356	CS2	M			80	
S		1365	CS2	S			75	
S		1401	CS2	3			80	
S		1425	CS2	3			80	
S		1458	CS2	S			65	
S		1484	CS2	3			65	
S		1512	CS2	3			70	
S		1540	INDD	P			70	
S		1572	INDD	P			70	
S		1602	INDD	P			75	
S		1628	INDD	P			80	
S		1639	CS2	E			70	
S		1667	CS2	M			70	
S		1719	CS2	3			60	
S		1745	CS2	S			70	
S		1762	CS2	S			70	
S		1798	CS2	S			65	
S		1815	CS2	Z			65	
S		1852	CS2	E			65	
S		1872	CS2	S			65	
S		1945	INDD	P			70	
S		1988	INDD	P			40	
S		2037	INDD	P			70	

DDH EAGA214 (2 — 8)

Cyprus Anvil Mining Corp.

Structural Log

Date: 12Sept81 Logged By: [illegible]

Code	From	To	Feature	Sym	S_0 Dip Direct.	S_1 Dip Direct.	S_2 Dip Direct	Description
1	10 — 14	16 — 20	22 — 24	26	28 — 32	34 — 38	40 — 44	
S		21143	CS2	Z		65 05D	75 230	
S		21185	CS2	Z			55 230	
S		22247	CS2	Z			75 230	
S		22295	CS2	Z			80 230	
S		23199	CS2	Z			80 230	⇒ PS_2
S		24005	CS2	S			85 230	
S		24600	CS2	H			90 230	Horizontal S_2
S		25155	CS2	Z			80 230	This hole's the pits for structure!!
S		25711	CS2	H			90 230	
S		26025	CS2	D			70 230	
S		26993	CS2	H			90 230	
S		27411	CS2	Z			75 230	
S		27995	CS2	Z			70 230	
S		28766	CS2	Z			70 230	
S		29120		R			75 230	
S		29800	CS2	S			65 230	
S		30004	CS2	Z			80 230	
S		30954	CS2	S			80 230	
S		31124	CS2	S			75 230	
S		31165	CS2	Z			75 230	
S		32000	PS2				75 230	
S		32700	CS2	Z			70 230	
S		33325	CS2	Z			60 230	
S		34112	CS2	Z			75 230	
S		34775	CS2	Z			70 230	
S		35155	CS2	D			80 230	
S		35800	PS2				75 230	
S		36300	CS2	S			60 230	
S		36993	CS2	Z			80 230	
S		37758	CS2	Z			70 230	PS2 dominant to EOH
S		38112	PS2				65 230	
S		38777	PS2				70 230	
S		39145	PS2				80 230	
S		39995	PS2				80 230	
S		40388	PS2				75 230	
S		40866	PS2				75 230	

DDH FAGA214 (2 — 8)

Cyprus Anvil Mining Corp.

Structural Log

Date: 12Sept.81 Logged By: DBT

Code	From	To	Feature	Sym	S_0 Dip Direct.	S_1 Dip Direct.	S_2 Dip Direct	Description
1	10 — 14	16 — 20	22 — 24	26	28 — 32	34 — 38	40 — 44	
S		41.56	PS 2				75 230	
S		42.55	CS 2	Z			80 230	
S		43.10	PS 2				65 230	
S		43.65	RS 2				65 230	
S		44.30	PS 2				50 230	
S		44.89	PS 2				55 230	
S		45.24	PS 2				80 230	
S		46.55	RS 2				40 230	
S		47.24	PS 2				35 230	} could be S,
S		47.64	RS 2				30 230	}
S		48.66	CS 2	M			80 230	could be Z

C.A.M.C. 1981 - E - 4

DDH FAGA214 (2 … 8) Cyprus Anvil Mining Corp

Logged by RBT

ASSAY LOG (SAMPLER'S COPY) Date Sep 15/81 Sampled by

CODE	FROM	TO	SAMPLE	INTR.	REC (m)	UNIT	DESCRIPTION
1	10 … 14	16 … 20	22 … 26	28 … 30	32 … 34	36 … 40	42
P	5130	5588	115518	28	107	4AA*	(5A6, 5D*) Bx gouge
P	6777	6833	115519	06	05	4A0	(4E4)
P	6833	6911	115520	08	07	5D*	(4D4)
P	6911	6955	115521	04	04	4D4	(5C*)
P	7088	7155	115522	07	07	4C0	
P	7188	7222	115523	04	04	4D4	/4A41.
P	7422	7477	115524	05	05	4D4	(4A41)
P	7599	7622	115525	03	03	4E4	
P	7622	7666	115526	04	03	4A0	
P	7666	7700	115527	03	03	4E4	(4E0)
P	7700	7800	115528	10	10	4A0	(4A4)
P	7800	7955	115529	15	15	4E4*	(4A0, 5A0)
P	7955	8099	115530	14	14	4E4*	(4A0, 5A0)
P	8099	8144	115531	05	05	4A0	
P	8144	8255	115532	11	11	4E4	(4A4, 4E0)
P	8255	8455	115533	20	20	4D4	(4A4)
P	8455	8655	115534	20	20	4D4	(4A14)
P	8655	8805	115535	15	15	4D4	(4A14)
P	9300	9344	115536	04	04	4A41	
P	9344	9411	115537	07	07	4A0	
P	9411	9477	115538	06	06	4E0	
P	9477	9544	115539	07	07	4A14	
P	9544	9688	115540	18	15	4A0	
P	9866	10066	115541	20	20	4A4	(5D*)
P	10066	10211	115542	15	09	4A4	(5D*)
P	18088	18288	115543	20	20	5A19	(4A0, 5A3)
P	18288	18488	115544	20	20	5A19	(4A0, 5A3)
P	18488	18688	115545	20	18	5A19	(4A0, 5A3)

DDH FAGA214 (2–8) Cyprus Anvil Mining Corp

Logged by RST

ASSAY LOG (SAMPLER'S COPY) Date _____ Sampled by _____

CODE	FROM	TO	SAMPLE	INTR.	REC (m)	UNIT	DESCRIPTION
1	10–14	16–20	22–26	28–30	32–34	36–40	42
P	1868	1889	11586	21	17	SA19	(4A0, 5A3)
P	2911	2937	11776	26	26	4GE4	(4G4)(4E4)
P	2937	2959	11777	22	22	4DC	(5D4*)
P	2959	2973	11778	14	14	4L14	
P	3211	3255	11779	43	16	4E4	MISLATCHED INTERUAL
P	3255	3272	11780	17	17	4A4	(4A43)

DDH EAGA-214 (2 Meters 8) **Cyprus Anvil Mining Corp.** Page _____ of _____

Structural Log Date: _____ Logged By: _____

Code	From	To	Feature	Sym	S_0 Dip Direct.	S_1 Dip Direct.	S_2 Dip Direct	Description
1	10 14	16 20	22 24	26	28 32	34 38	40 44	
F	1189	1190	GC?					gouge
F		1379	IG			55 000		gouge 11 S_2
F		1408	IG			60 000		" sub 11 S_2
F		1418	IG			60 000		" "
D		1488	IG			30 000		" "
F		1529	IG			50 000		" "
F	1530	1558	XGB	3	50 000		20 000	bxia & gouge 11 S_2
F	1582	1600	XGB	1				gouge & bxia, 0.3m rec
F	1600	1640	N					no core — tricones
F	1664	1671	XGB			70 000		gougey bxia
F	1678	1683	XGB			70 000		bxia tect, gouged.
F		1791	IG					gouge
F		1880	IG					" 5A
F		1888	IG			70 000		" 3cm 11 S_2
F		1893	IG					"
F		1984	IG					"
F		2011	IG					"
F	1202	2090	G		50 270			gouge, 50%
F	2222	2250	GP	5				" "
F		2299	IG					"
F		2300	IG					"
F	2485	2487	G					" , 50%
F	2676	2697	GPFR					gouge, .3m rec'd.
F		2777	IG			70 000		" 11 S_2
F	2786	2789	G		65 000		65 000	" "
F	2801	2803	X					crackle bxia
F		2888	IG			65 000		gouge 11 S_2
2 lines → F	1914 1990	1938 2028	BP NM	3				.1m rec'd — mustatch
F		2051	IG					gouge
F	2070	2074	G					gouge 40° to c.a.
F		2245	IG					gouge 45° " "
F		2380	IG			85 000		" 11 S_2
F	2668	2670	BG					bxia & gouge
F		2973	G			65 000		gouge 11 S_2
F	3033	3043	G				80 000	" upper IND lower 11 S_2
F		3132	IG			75 230		" 11 S_2

DDH FAGA214 (2 meters 8)

Cyprus Anvil Mining Corp.

Structural Log

Page _____ of _____

Date: _____ Logged By: _____

Code	From	To	Feature	Sym	S_0 Dip Direct.	S_1 Dip Direct.	S_2 Dip Direct	Description
1	10 14	16 20	22 24	26	28 32	34 38	40 44	
F	318 4	318 6	G		45 260		40 000	gouge
F	321 2	325 5	MC					mistatch
F		327 2	1G			11 RFE		gouge 11 S_2
F	327 2	331 1	GS		11 RFE		11 RFE	sheared 11 S_2 no indiv gouge zone
F	331 9	335 9	GS			30 050		" & gouged u/l IND
								internal 30°/050
F	336 3	339 3	BG			11 RFE		gouged & broken core
F	339 3	339 5	G					gouge, u/l IND
F		353 9	1G					" IND
F	354 9	356 6	GB		50 000			gouge & broken core; upper
								contact 50/000 lower IND
F	411 0	412 7	1G		75 000		75 000	gouge 11 S_2
F	431 1	435 1	1G		65 000		65 000	gouge 11 S_2
F	435 1	435 2	G3F		65 000		65 000	gouge — thrust?
F	445 2	458 4	1G					incip. gouged
F	458 4	460 5	D					
F	460 5	461 5	G					heavily alt'd & gouged no atts poss
F	463 5	463 7	G				40 000	gouge; upper IND
								lower 11 S_2
F	234	237	R					
F	450	460	R					
F	841	875	X1F			90 000		

DDH: FA3A069 UTM-N: 905,159.2 UTM-E: 592,206.1 UTM-ELEV: 1,302.5 TOTAL DEPTH: 410.3 SECTION: W 80
RFE: S2 RFE DIR: 230 PLUNGE ANGLES: 11 312 DHD CALC: C SS CALC: 0

DEPTHS FROM	DEPTHS TO	SAMPLE NO.	INT.	REC.	ROCK UNIT	ASSAYS S.G. PULP	CU %	PB %	ZN %	AG(AA) G/MT	AG(FA) G/MT	AU(FA) G/MT	PO %	PY %	TOT FE	BAO %	HG %	MN %	AS %	BA %	S.G. W.R.
237.7	240.4		2.7	2.6		3.01	.09	2.48	3.92	43.25	39.66	1.12	1	6	8						
241.8	243.4		1.6	1.6		3.00	.08	1.40	2.50	23.00		1.03	1	4	5						
304.6	315.3		10.7	10.3		3.17	.14	4.65	6.80	76.42	9.53	1.52		20	21						
315.5	326.3		10.8	10.7		3.15	.08	1.56	1.97	29.24		1.17		12	13						
334.9	337.0		2.1	.0				.82	1.56		14.10										
339.5	342.6		3.1	.0				.62	1.11		12.00										
350.8	352.3		1.5	.0				.23	.25		2.10										
352.5	355.2		2.7	2.7		3.52	.15	2.44	2.40	32.51		.20	9	15	25						

DDH: F UTM-N: 905,159.2 UTM-E: 592,206.1 UTM-ELEV: 02.5 TOTAL DEPTH: 410.3 SECTION: W 80
RFE: S2 RFE DIR: 230 PLUNGE ANGLES: 11 312 DHD LC: 0 SS CALC: 0

DEPTH	ZENITH	AZIMUTH
0.000	180.000	0.000
122.500	172.000	133.300
244.500	170.000	133.600
366.400	175.000	173.000

DDH: FAGA069 UTM-N: 905,159.2 UTM-E: 592,206.1 UTM-ELEV: 1,302.5 TOTAL DEPTH: 410.3 SECTION: W 80
RFE: S2 RFE DIR: 230 PLUNGE ANGLES: 11 312 DHD CALC: 0 SS CALC: 0

DEPTH	UNIT	CODE	DESC	RECOVERY	IND
11.3	0001			0.0	1
38.3	0002	585	(5D0) MINOR	0.0	1
49.2	0003	500		0.0	1
62.9	0004	588		0.0	1
66.3	0005	500		0.0	1
110.3	0006	583		0.0	1
119.1	0007	580		0.0	1
125.0	0008	586		0.0	1
129.2	0009	530		0.0	1
130.2	0010	504*		0.0	1
133.4	0011	580		0.0	1
137.6	0012	5821	&9	0.0	1
138.6	0013	4D4	(4E4?) NO CORE	0.0	1
139.1	0014	4C0		0.0	1
140.1	0015	4A3		0.0	1
140.7	0016	4D4		0.0	1
142.6	0017	4C3		0.0	1
143.9	0018	4A30	NO CORE IN PART	0.0	1
144.3	0019	5C4a		0.0	1
151.2	0020	4A4	&3 &0	0.0	1
153.0	0021	4L0		0.0	1
159.1	0022	4A10	PHYLLITIC (3G2)	0.0	1
160.6	0023	4L4	[4C0?]	0.0	1
162.2	0024	4D0?	NO CORE	0.0	1
162.7	0025	4L24		0.0	1
166.4	0026	4A10	PHYLLITIC &3 &9 (4D0)	0.0	1
168.9	0027	5C4*		0.0	1
170.0	0028	4A1	PHYLLITIC &4	0.0	1
170.7	0029	4L0	[4L24]	0.0	1
172.2	0030	586	&9	0.0	1
207.3	0031	4A1	PHYLLITIC &4	0.0	1
209.2	0032	4A4	NO CORE	0.0	1
213.2	0033	4D45	(4A3)(4C#) 70:30:TRACE	0.0	1
219.9	0034	4K0	&4 (5D4)	0.0	1
220.2	0035	4L0		0.0	1
221.4	0036	4AD4?	NO CORE	0.0	1
222.1	0037	5A19		0.0	1
222.5	0038	440		0.0	1
222.9	0039	5A19	6	0.0	1
223.8	0040	4A4?	(4D4 SERICITIC)?	0.0	1
225.2	0041	5A19		0.0	1
227.5	0042	586	(4D4) MINOR	0.0	1
230.1	0043	5A19	(4A0)(4D4) BOTH MINOR	0.0	1
231.3	0044	4L64		0.0	1
232.2	0045	4D4?	SERICITIC NO CORE	0.0	1
236.0	0046	4A1	&3&4 (4L0)	0.0	1
237.7	0047	5864	(10Q0)	0.0	1
239.4	0048	4A14	PHYLLITIC (3G2)	0.0	1
240.4	0049	5861	&9	0.0	1
241.5	0050	5846		0.0	1
243.4	0051	4A10	PHYLLITIC	0.0	1

DDH: FAGA069 UTM-N: 905,159.2 UTM-E: 592,206.1 UTM-ELEV: 1,302.5 TOTAL DEPTH: 410.3 SECTION: W 80
RFE: S2 RFE DIR: 230 PLUNGE ANGLES: 11 312 DHD CALC: 0 SS CALC: 0

DEPTH	UNIT	CODE	DESC	RECOVERY	IND
244.8	0052	5B46		0.0	1
250.5	0053	3GO	(5D4* -> 5D6)	0.0	1
253.7	0054	5DC	(5D6)(5986[3G8])33:33:33 & BIO	0.0	1
263.0	0055	3GO	&9(10QO)(5DO)80:15:05 STRINGER	0.0	1
263.4	0056	4L	&1&2&4&7&6 AFTER 3G STRINGERED	0.0	1
265.2	0057	3GO	(10CO) 60:40 STR.	0.0	1
267.0	0058	4L	&1&2&4&7&6 STR.	0.0	1
269.0	0059	3GO	&9 (10Q$) 95:05 STR. & SPECK	0.0	1
270.1	0060	10CC	&* (5D4*)(4LC) 60:20:20	0.0	1
290.2	0061	3GC	(5D4$)(10QO&$) 90:05:05 SPECK	0.0	1
291.2	0062	3B3	[5DO]	0.0	1
303.6	0063	3GO	&9 (3B$) 90:10	0.0	1
304.6	0064	4L2	&1 (3G4)(3GO&9)(5C4$)	0.0	1
305.1	0065	4A10	PHYLLITIC	0.0	1
306.8	0066	4G4#	(5D4*) TRACE	0.0	1
307.8	0067	4E4	(5C*)	0.0	1
308.5	0068	4G4#		0.0	1
309.4	0069	4E4	(5DO)	0.0	1
309.8	0070	4G4#		0.0	1
312.4	0071	4E4#	(4G4)	0.0	1
315.5	0072	4E4	NO CORE	0.0	1
320.3	0073	4A1	&3&4	0.0	1
326.3	0074	4A10		0.0	1
326.7	0075	4L2	&1	0.0	1
333.1	0076	3GC	&9 (10Q$)	0.0	1
334.4	0077	4L2	&1(5D4$)4L AFT 5D IN PT,BEIG &	0.0	1
339.5	0078	4CO	[4L12 &4] (10Q$)(5D4*)	0.0	1
342.6	0079	4AO	(4CO)	0.0	1
347.6	0080	4LC	&1&2 (10Q&$) 90:10	0.0	1
348.7	0081	3GO	&9&4	0.0	1
352.0	0082	4L2	&1&4 (3G4)(5D4*) 50:40:10	0.0	1
355.2	0083	4LH		0.0	1
360.4	0084	4L2	&1 &4 ->3G4 DOWNHOLE	0.0	1
360.4	0085	3GO	&9&4&6	0.0	1
364.7	0086	3G9	&6	0.0	1
366.3	0087	4L2	&1 (3G4) 50:50	0.0	1
368.9	0088	5C#	BIOTITE	0.1-	1
379.9	0089	4LO	&2 &6 AFTER 3G STR. & 5D	0.1-	1
384.4	0090	5C$	.	0.1-	1
387.4	0091	4LC	&1 &2 &6 AFTER 3G STR.	0.0	1
388.7	0092	5C$	.	0.1-	1
395.1	0093	4L24	&1 STR.	0.1-	1
398.1	0094	5C$	.	0.1-	1
399.1	0095	4L24	&1 (5D4*?)	0.1-	1
400.4	0096	5C$	.	0.1-	1
401.3	0097	4L2	&1 &6	0.1-	1
401.7	0098	5C$	.	0.1-	1
402.0	0099	4L2	&1 &6 STR.	0.1-	1
402.4	0100	5C$	.	0.1-	1
404.4	0101	4L2	&6 &1	0.1-	1
405.3	0102	5C$	.	0.1-	1

DDH: FAGA069 UTM-N: 905,159.2 UTM-E: 592,206.1 UTM-ELEV: 1,302.5 TOTAL DEPTH: 410.3 SECTION: W 80
RFE: S2 RFE DIR: 230 PLUNGE ANGLES: 11 312 DHD CALC: 0 SS CALC: 0

DEPTH	UNIT	CODE	DESC	RECOVERY	IND
407.6	0103	4L2	&6 &1 AS ABOVE AD NAUSEUM	0.1-	1
408.2	0104	5C$	&4	0.1-	1
409.5	0105	4L2	&6 &1	0.1-	1
409.8	0106	5C$	.	0.1-	1
410.2	0107	4L2	&6 &1 (5C$) MINOR	0.1-	1
410.2	0109	4L2	&6&1 (5C$)	0.1-	1

DDH: FAGA069 UTM-N: 905,159.2 UTM-E: 592,206.1 UTM-ELEV: 1,302.5 TOTAL DEPTH: 410.3 SECTION: W 80
RFE: S2 RFE DIR: 230 PLUNGE ANGLES: 11 312 DHD CALC: 0 SS CALC: 0

DDH	F DEPTH	T DEPTH	FEAT	SYMTRY	S0 ANGLE	S0 DIRECT	S1 ANGLE	S1 DIRECT	S2 ANGLE	S2 DIRECT	RFE CDE	DHDC	SDC	PROCESS
FAGA069	0.0	13.4	CS2		0	0	0	0	70	230	0	1	0	0
FAGA069	11.3	19.2	CS2	Z	0	0	0	0	63	230	0	1	0	0
FAGA069	0.0	19.4	CS2		0	0	0	0	59	230	0	1	0	0
FAGA069	0.0	25.0	CS2		0	0	0	0	68	230	0	1	0	0
FAGA069	19.2	26.4	CS2	S	0	0	0	0	0	0	0	1	0	0
FAGA069	26.6	27.1	CS2	Z	0	0	0	0	0	0	0	1	0	0
FAGA069	0.0	31.4	CS2		0	0	0	0	74	230	0	1	0	0
FAGA069	0.0	37.4	CS2		0	0	0	0	75	230	0	1	0	0
FAGA069	27.1	41.3	CS2	S	0	0	0	0	0	0	0	1	0	0
FAGA069	41.3	41.9	CS2	Z	0	0	0	0	0	0	0	1	0	0
FAGA069	0.0	43.0	CS2		0	0	0	0	80	230	0	1	0	0
FAGA069	0.0	49.4	CS2		0	0	0	0	71	230	0	1	0	0
FAGA069	0.0	54.4	CS2		0	0	0	0	77	230	0	1	0	0
FAGA069	0.0	60.6	CS2		0	0	0	0	74	230	0	1	0	0
FAGA069	0.0	65.5	CS2		0	0	0	0	72	230	0	1	0	0
FAGA069	0.0	72.1	CS2		0	0	0	0	68	230	0	1	0	0
FAGA069	0.0	78.2	CS2		0	0	0	0	70	230	0	1	0	0
FAGA069	41.9	80.1	CS2	S	0	0	0	0	0	0	0	1	0	0
FAGA069	0.0	84.8	CS2		0	0	0	0	76	230	0	1	0	0
FAGA069	80.1	89.2	CS2	D	0	0	0	0	0	0	0	1	0	0
FAGA069	0.0	91.0	CS2		0	0	0	0	81	230	0	1	0	0
FAGA069	0.0	97.4	CS2		0	0	0	0	77	230	0	1	0	0
FAGA069	89.2	98.5	CS2	S	0	0	0	0	0	0	0	1	0	0
FAGA069	0.0	102.8	CS2		0	0	0	0	78	230	0	1	0	0
FAGA069	98.5	102.9	CS2	D	0	0	0	0	0	0	0	1	0	0
FAGA069	0.0	108.8	CS2		0	0	0	0	87	230	0	1	0	0
FAGA069	0.0	115.1	CS2		0	0	0	0	84	230	0	1	0	0
FAGA069	0.0	119.4	CS2		0	0	0	0	81	230	0	1	0	0
FAGA069	0.0	123.1	CS2		0	0	0	0	79	230	0	1	0	0
FAGA069	0.0	128.9	CS2		0	0	0	0	74	230	0	1	0	0
FAGA069	0.0	133.7	CS2		0	0	0	0	78	230	0	1	0	0
FAGA069	102.9	137.6	CS2	S	0	0	0	0	0	0	0	1	0	0
FAGA069	0.0	139.1	PS2		0	0	0	0	50	230	0	1	0	0
FAGA069	0.0	144.1	PS2		0	0	0	0	59	230	0	1	0	0
FAGA069	137.6	151.2	PS2	P	0	0	0	0	0	0	0	1	0	0
FAGA069	0.0	151.8	CS2		0	0	0	0	68	230	0	1	0	0
FAGA069	0.0	158.2	CS2		0	0	0	0	77	230	0	1	0	0
FAGA069	151.2	159.1	CS2	M	0	0	0	0	0	0	0	1	0	0
FAGA069	0.0	164.0	PS2		0	0	0	0	53	230	0	1	0	0
FAGA069	159.1	170.0	PS2	P	0	0	0	0	0	0	0	1	0	0
FAGA069	0.0	171.1	CS2		0	0	0	0	76	230	0	1	0	0
FAGA069	170.0	172.2	CS2	Z	0	0	0	0	0	0	0	1	0	0
FAGA069	172.2	221.3	PS2	P	0	0	0	0	0	0	0	1	0	0
FAGA069	0.0	222.1	CS2		0	0	0	0	72	230	0	1	0	0
FAGA069	221.3	225.9	CS2	Z	0	0	0	0	0	0	0	1	0	0
FAGA069	0.0	227.9	CS2		0	0	0	0	73	230	0	1	0	0
FAGA069	0.0	230.7	CS2		0	0	0	0	71	230	0	1	0	0
FAGA069	0.0	236.3	CS2		0	0	0	0	66	230	0	1	0	0
FAGA069	0.0	240.7	CS2		0	0	0	0	74	230	0	1	0	0
FAGA069	0.0	246.9	CS2		0	0	0	0	70	230	0	1	0	0
FAGA069	0.0	252.3	CS2		0	0	0	0	79	230	0	1	0	0

DDH: FAGA069 UTM-N: 905,159.2 UTM-E: 592,206.1 UTM-ELEV: 1,302.5 TOTAL DEPTH: 410.3 SECTION: W 80
RFE: S2 RFE DIR: 230 PLUNGE ANGLES: 11 312 DHD CALC: 0 SS CALC: 0

DDH	F DEPTH	T DEPTH	FEAT	SYMTRY	S0 ANGLE	S0 DIRECT	S1 ANGLE	S1 DIRECT	S2 ANGLE	S2 DIRECT	RFE CDE	DHDC	SDC	PROCESS
FAGA069	0.0	258.2	CS2		0	0	0	0	66	230	C	1	0	0
FAGA069	0.0	263.3	CS2		0	0	0	0	68	230	C	1	0	0
FAGA069	0.0	270.3	CS2		0	0	0	0	80	230	C	1	0	0
FAGA069	0.0	276.8	CS2		0	0	0	0	77	230	C	1	0	0
FAGA069	0.0	283.1	CS2		0	0	0	0	65	230	C	1	0	0
FAGA069	0.0	289.2	CS2		0	0	0	0	77	230	C	1	0	0
FAGA069	0.0	295.1	CS2		0	0	0	0	78	230	C	1	0	0
FAGA069	0.0	301.1	CS2		0	0	0	0	76	230	C	1	0	0
FAGA069	0.0	304.7	CS2		0	0	0	0	84	230	C	1	0	0
FAGA069	225.9	305.2	CS2	S	0	0	0	0	0	0	0	1	0	0
FAGA069	305.2	315.5	PS2	P	0	0	0	0	0	0	0	1	0	0
FAGA069	0.0	322.9	CS2		0	0	0	0	65	230	C	1	0	0
FAGA069	0.0	327.9	CS2		0	0	0	0	75	230	C	1	0	0
FAGA069	0.0	333.7	CS2		0	0	0	0	76	230	C	1	0	0
FAGA069	0.0	337.2	CS2		0	0	0	0	71	230	C	1	0	0
FAGA069	315.5	339.5	CS2	S	0	0	0	0	0	0	C	1	0	C
FAGA069	339.5	342.6	PS2	P	0	0	0	0	0	0	C	1	0	0
FAGA069	0.0	344.0	CS2		0	0	0	0	78	230	C	1	0	0
FAGA069	0.0	350.1	CS2		0	0	0	0	74	230	C	1	0	0
FAGA069	342.6	352.5	CS2	S	0	0	0	0	0	0	C	1	0	0
FAGA069	352.5	355.3	PS2	P	0	0	0	0	0	0	0	1	0	0
FAGA069	0.0	356.6	CS2		0	0	0	0	80	230	0	1	0	C
FAGA069	0.0	363.2	CS2		0	0	0	0	70	230	0	1	0	0
FAGA069	0.0	368.3	CS2		0	0	0	0	78	230	C	1	0	0
FAGA069	0.0	374.6	CS2		0	0	0	0	77	230	0	1	0	0
FAGA069	0.0	380.5	CS2		0	0	0	0	77	230	C	1	0	C
FAGA069	0.0	387.2	CS2		0	0	0	0	81	230	0	1	0	0
FAGA069	0.0	393.4	CS2		0	0	0	0	78	230	C	1	0	0
FAGA069	0.0	398.4	CS2		0	0	0	0	60	230	0	1	0	0
FAGA069	355.3	399.6	CS2	S	0	0	0	0	0	0	0	1	0	0
FAGA069	399.6	400.2	CS2	Z	0	0	0	0	0	0	0	1	0	0
FAGA069	0.0	404.2	CS2		0	0	0	0	75	230	0	1	0	0
FAGA069	0.0	408.4	CS2		0	0	0	0	70	230	C	1	0	0
FAGA069	400.2	410.3	CS2	S	0	0	0	0	0	0	C	1	0	1

DDH: FAGA069 UTM-N: 905,159.2 UTM-E: 592,206.1 UTM-ELEV: 1,302.5 TOTAL DEPTH: 410.3 SECTION: W 80
RFE: S2 RFE DIR: 230 PLUNGE ANGLES: 11 312 DHD CALC: 0 SS CALC: 0

DDH	F DEPTH	T DEPTH	FEAT REC CD	PARLL	UPPER PLANE		INTERNAL PLANE		LOWER PLANE		DHD
FAGA069	11.2	13.1	G		0	0	C	0	0	3	1
FAGA069	22.0	22.2	G		C	0	C	0	0	3	1
FAGA069	29.6	29.7	G		0	0	0	0	0	3	1
FAGA069	55.1	55.7	G		0	0	0	0	0	3	1
FAGA069	56.6	56.9	G		0	0	C	0	0	3	1
FAGA069	70.6	71.0	G		0	0	0	C	0	3	1
FAGA069	0.0	72.1	G		0	0	0	0	0	3	1
FAGA069	75.4	76.2	G		0	0	0	0	0	3	1
FAGA069	77.1	77.6	G		0	0	0	0	0	3	1
FAGA069	0.0	121.0	G		0	0	0	0	0	3	1
FAGA069	130.3	133.0	1GB		74	0	78	C	0	3	1
FAGA069	133.9	134.1	S		0	0	0	0	0	3	1
FAGA069	0.0	137.3	S		0	0	0	0	0	3	1
FAGA069	170.2	170.4	X		0	0	0	0	0	3	1
FAGA069	173.6	174.0	G		0	0	0	0	0	3	1
FAGA069	180.7	182.5	S		0	0	0	0	0	3	1
FAGA069	0.0	243.6	G		0	0	C	0	0	3	1
FAGA069	275.6	276.1	G		0	0	0	0	0	3	1
FAGA069	281.0	281.3	S		0	0	0	0	0	3	1
FAGA069	287.1	287.4	S		0	0	0	0	0	3	1
FAGA069	326.6	333.1	1XG		0	0	0	0	0	3	1
FAGA069	334.3	339.5	3BG		0	0	0	C	0	3	1
FAGA069	339.5	342.5	MF?	1	0	0	0	0	0	3	1
FAGA069	0.0	351.1	1G		0	0	0	0	0	3	1
FAGA069	363.9	364.6	B1G		0	0	0	0	0	3	1

CYPRUS ANVIL MINING CORPORATION

DIAMOND DRILL CORE LOG

Hole Number: 75-A069

Project: GRUM

Location: VANGORDA PLATEAU

Claim: _____

UTM
~~Terr.~~ Plane
Co-ords.: 6,905,159.25 N

1979 HIW Survey
592,206.08 E

Grid
Co-ords.: 80W / 6N

1979 HIW Survey
Elevation: 1302.5

Total Depth: 1346 ft

Fabric Orientation Diagram:

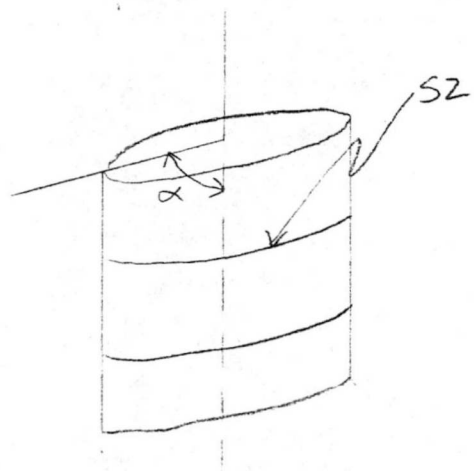

All symmetry determinations looking

NW with S2 dipping

SW with dip azimuth 230.

Purpose: _____

RE
Logged by: PN Date(s) Logged: JUNE 18-21, 23-25 / 80

Drilling
Contractor: _____

Core:	Size	From	To
	BW	0	50'
	BQ	50	1346'

Collar Cased and Capped: ____

Started: 27/4/75 Completed: 11/5/75

Cyprus Anvil Mining Corp.
Diamond Drill Core Log

DDH 75-A069
2 8

Code	Drillhole	Elevation	Northing	Easting	Comments
1	2 8	10 16	17 24	25 32	34 48
T	75-A069	1302.5	9051591.2	5922061.	FEET

Code	Drillhole	Depth	Zenith Angle	True Azimuth	Comments
1	2 8	10 14	22 26	28 32	34 56
R	75-A069	0 0	180.0	0.0	AT COLLAR
R	75-A069	402.0	172.0	133.8	TROPARI
R	75-A069	802.0	176.0	133.6	
R	75-A069	1202.0	175.0	173.0	
R		.	.	.	
R		.	.	.	
R		.	.	.	
R		.	.	.	
R		.	.	.	
R		.	.	.	
R		.	.	.	
R		.	.	.	
R		.	.	.	
R		.	.	.	

Code	Drillhole	Comments, Errant Remarks, Snivellings and/or Lewd Suggestions
1	2 8	10 47

DDH FAGA069 (2–8)

Cyprus Anvil Mining Corp.

Lithologic Log

Page 1 of 4

Date: 29 Aug 82 Logged By: DSJ/GAJ

Code (1)	From (10–14)	To (16–20)	Recov. (22–24)	No. (26–28)	Unit (30–34)	Description (35)
L	803	822		1	3G0	(SD4* → SD6) 5% or so U&L contacts
						of SD gradational (OQ*) 3G is weakly
						stringered no $CO_3^=$ – minor wisps
						of sphene near 806, intact
L	822	8323		2	SD0	(SD6)(SB86 [3G8]) subequal proportions
						intact, partly biotitic
L	8323	8630		3	3G0	±9 minor + stringered (OQ0)(SD0 bio) 80:15:5
						OQ0 @ 835–845 as 3 1½' sections
						stringers, qtz-chl-ank w characteristic
						microselvedges.
L	863	8642		4	4L	±1 ±2 ±4 ±7 ±6 (no S!) relict stringer text
						& doubtless derived from above 3G0 stringered.
L	8642	8700		5	3G0	stringered (OQ0) 60:40
						OQ0 = .2–.3 m S_2 ∥
L	870	8760		6	4L	±1 ±2 ±4 ±7 ±6 as unit 4 – has chl
						qtz bio stringers in creme groundmass
L	8760	8825		7	3G0	±9 stringered and locally speckled
						(OQ* dol) 95:5 OQ* 1–5 cm
						S_2 ∥ and or D_2 folded bands as
						usual.
L	8825	8860		8	9Q0	±* dol (SD4*)(4L0) heavily veined
						intersection with 60% OQ* subequal
						SD & 4L – some 4L after SD
L	8860	9520		9	3G0	(SD4* dol)(OQ0±* dol) 90:5:5
						SD4* 0.1–0.2 m av. thickness. OQ0 @
						924.5–927 + others scattered
						not well stringered but moderately
						speckled – poorly developed qtz sstn lams – ps_2 foliated
L	9520	9554		10	3B3	[SD0] intact normal.
L	9554	9960		11	3G0	±9 minor (3B* dol) 90:10 –
						M regions at 970 and 983 in 3B3's
						4 3B3 bands
L	9960	9995		12	4L2	±1 (3G4)(3G0±9)(SC4* dol) 60% 4L some
						from SD, 3G4 marginal to 6" relic
						of 3G0±9 – some 4L from 3G
						SC4* dol is 6" at EOI

DDH FAGA069 (2–8)

Cyprus Anvil Mining Corp.

Lithologic Log

Page 2 of ____

Date: ____ Logged By: ____

326.3

Code	From	To	Recov.	No.	Unit	Description
1	10–14	16–20	22–24	26–28	30–34	35
L	9995	10707		13	#	sulfides - core missing
L	10707	10718		14	4L2	±1
	10718	10929		15	3G0	±9 v. minor - similar to previous 3G.
						but not stringered or speckled.
						weakly qtz $CO_3^=$ crackle bxted,
						(OO* dol) minor
L	10929	1097		16	4L2	±1 (SD4* dol) 4L partly derived from
						SD on textural basis ie: anomalous pinkish buff color
						SD @ 1095 - 1096 and tends to be devoid of soil + xcutting
						qtz sulfide veinlets and is granular under
						handlens + associated
						with obvious SD.
L	10970	11140		17	4C0	[4L12 ±4] characteristic yellow green
						creme color - strongly banded where
						qtz sulfide bands present -
						homogenous $S^=$ species - bands sharp
						to diffuse contacts - not good
						extent - could be bleached unit.
						Wallrx - unit strongly broken
						and cut by (OO* dol) veins.
						(SD4*) minor - has fuchite and
						usual pinkish buff color.
L	11140	11240		18	4A0	shitty (4C0) rubble 1' recovered
						no gouge fault or mistatch???
L	11240	11403		19	4L0	±1±2 v minor (OO0±* dol) 90:10 alternating
						pinkish buff and light olive grey green
						bands strongly suggest bulk of unit
						derived from SD (3G4)(3G0±9) v local.
						Interleaved seq of tuffs and variably
						carbonaceous pelites now "bleached" probably
						by hydrothermal fluids. Well developed
						lithon struct in 4L ccp where after
						SD.
L	11403	11439		20	3G0	±9±4 v. weakly bleached 3G similar
						to rest of 3G in this hole.
						minor IND gouge @ 1152.

DDH FAGA069 (2 — 8)

Cyprus Anvil Mining Corp.

Lithologic Log Date: _____ Logged By: _____

Code	From	To	Recov.	No.	Unit	Description
1	10 — 14	16 — 20	22 — 24	26 — 28	30 — 34	35
L	1143 9	1155 0		21	4L2	±1 ±4 minor (3G4)(SD4*) 50:40:10
						progressively altd sequence of pelites
						with minor interbanded tuffs grading
						downward into good 4L in lower
						half of interval with good relict
						SD texture in 4L locally.
L	1155 0	1165 5		22	#	sulfides - core missing
L	1165 5	1172 8		23	4L2	±1 ±4 minor → downhole into 3G4 -
						altd halo around sulfide interval,
						identical to unit 21 but reversed.
L	1172 8	1182 4		24	3GP	±9 ±4 ± 6 minor 6 = wispy S_2 11 sphal
						@ 1182 v. weakly bleached continuation
						of altn envelope above
						(QQU) 5% intact - not stringered,
						possible ank (noticed in 20%) in gtz
						siltstone lp. mottled or speckled but
						not well developed
L	1182 4	1196 5		25	3G9	±6 minor, 6: S_2 11 sphal wisps randomly
						distrib thru unit best @ 1186-1187
						intact except for last 2.5' broken
						with incip S_2 11 gouge.
						2" S_2 11 gouge @ 1195.6
L	1196 5	1207		26	4L2	±1 (3G4) 50:50 similar to unit
						21 etc. 3G4 in upper ½ 4L lower
						½ - some suggestion of relict
						SD in 4L
L	1207	1203 9		27	SC*	calc-biotitic - normal. intact. boring
L	1203 9	1226 1		28	4L0	±2 ±6 well developed relict 3G stringer
						texture and local probable relict
						SD - stringers are chl-bio-qtz
L	1226 1	1226 5		29	#	rabbits foot
L	1226 5	1246 7		30	4L0	±2 ±6 as unit 28 - lower half of
						intersection likely SD derived
						upper half with prominent stringers
						thus derived from 3G stringer. SD derived
						suspected sections not as strongly stringered.

1201.8

DDH FAGA069 (2–8)

Cyprus Anvil Mining Corp.

Lithologic Log

Page 4 of ____

Date: ____ Logged By: ____

Code	From	To	Recov.	No.	Unit	Description
1	10–14	16–20	22–24	26–28	30–34	35
L	1246 7	1261 3		31	5C*	dol dk green well banded - $CO_3^=$
						micro porphs. - banding 11 S_1
L	1261 3	1271 0		32	4L0	±1±2±6 similar to above - in generall
						looks as if derived from 36 str.
L	1271 0	1275 5		33	5C*	dol as unit 31, intact
L	1275 5	1296 5		34	4L24	±1 minor thinly banded qtz $S^=$ layers
						and dissem $S^=$ thru interval
						giving stringered appearance -
						stringers are qtz+py>po+gal+cpy.
						not as chloritic as unit 33.
						altn overprint on 36? - 3 v. high
						grade massive 4J veins at 1280.7
						=1" thick & 1282 = 4" thick & 1283 =
						½" thick
L	1296 5	1306 3		35	5C*	dol. - dk green - strongly banded - no fuch
L	1306 3	1309 5		36	4L24	±1 (SD4*?) ← some of unit that
						looks like derived from SD4* and
						here has minor fuchite associated.
L	1309 5	1313 9		37	5F*	dol. normal excellent lithon structure.
L	1313 9	1317 3		38	4L2	±1±6 color pinkish beige to grey
						green - PS_2 foliated - weakly
						stringered - interpreted as SD
						and pelites bleached altntly could
						be 36 siltstones carbonated along
						with metavolcs (ie 5C)
L	1317 3	1318 0		39	5C*	dol. as 37
L	1318 0	1319 0		40	4L2	±1±6 str as 38
L	1319 0	1320 3		41	5C*	dol. as 37
L	1320 3	1327 0		42	4L2	±6±1 as 38
L	1327 0	1330		43	5C*	dol. as 37
L	1330	1337 3		44	4L2	±6±1 as 38
L	1337 3	1339 5		45	5C*	dol ±4 mottled more heavily carbonated
						strongly fuchitic at 7 of
L	1339 5	1343 8		46	4L2	±6±1
L	1343 8	1344 6		47	5C*	dol.
L	1344 6	1346 0		48	4L2	±6±1 minor sck dol in last 6 inches of

hole - Jennings threw it out.

corrections

DDH A069 (2–8)

Cyprus Anvil Mining Corp.

Lithologic Log

Page _____ of _____

Date: _____ Logged By: PN; corrected JSM

Code	From	To	Recov.	No.	Unit	Description
1	10–14	16–20	22–24	26–28	30–34	35
	4375	4516		12	5B21	±9
	4516 (1376)	4546 (1386)		13	4D4	(4E4) ? No core Met test
	4546	4565 (1391)		13	4C0	
	4565	4597 (1401)		13	4A3	
	4597	4615 (1407)		13	4D4	
	4615	4674		13	4C0	
	4674	4720		14	4A43	(469.7-471.8 No core 4A43 High grade)
				15	5C4*	
				16	4A4	±3
	4962 (1512)	5020 (1530)		17	4L0	(minor sfds, minor phyll part)
	5020	5220		17	4A1	low grade phyll + C part + 3G2
	5220 (1591)	5277 (1608)		18	4L4	
	5277	5321 (1622)		18	4D4	? No core, met test
	5321	5339		18	4L2	
	5339	5525		19	4A1	±3 (4D0) phyll + C
				20	5C4*	
				21	4A1	±4 phyll + C
				22	4L0	
				23	5B6	
	5649 (1722)	6801 (2073)		24-25	4A1	±4 phyll + C
	6801	6865 (2092)		25	4A4	?? No core met test
	6865	6996 (2133)		25	4D45	(4A3) ((4C*))
	6996	7215 (2199)		26	4K0	(5D4)
	7215	7225 (2202)		26	4L0	
	7225	7263 (2214)		26	4AD4	? No core met tests High grade
	7263	7287		27	5A19	slightly calc
	7287	7301 (2225)		28	4A4	
	7301	7314		28	5A19	6
	7314	7344		29	4A4	(4D4 sericitic) ? No core met tests
	7344 (2229)	7389 (2252)		30	5A19	slightly calc
	7389	7465		31	5B6	(4D4)
				32	5A19	slightly calc (4A0)(4D4)
				33	4L6	
	7588 (2313)	7619 (2322)		34	4D4	ser. ? No core, met tests
	7619	7743		34	4A1	±3 ±4 (4L0) C + phyll
	7743 (2360)	7870 (2377)		35	5B64	(10Q0)

meters

feet

C. A. M. C. 1981 – E-3

Note: unit #'s should be changed to incorporate corrections if this log is to be sent to computer

Corrections

DDH 2 8

Cyprus Anvil Mining Corp.

Lithologic Log

Page _____ of _____

Date: _____ Logged By: _____

Code	From	To	Recov.	No.	Unit	Description
1	10 14	16 20	22 24	26 28	30 34	35
		2394 7854		36	4A14	phyll+c ±3G2
		2404 7886		37	5B6	v. minor stds
				38	5B46	
				39	4A1	phyll low grade
				40	5B46	
	2447 8030			41	5B6	
				56	4L7	(5C*mot@fw)
				57	4A1	low grade phyll+c
				58	4G4*	cc
				59	4E4	(5C*mot)
				60	4G4*	
				61	4E4	(5D0)
				62	4G4*	
	3098 10165	3124 10250		63	4E4*	cc (4G4) (ankspots)
	10250	10352		63	4E4	? No core met tests
	10352	3201 10510		64	4A1	±3 ±4
	10510	10707		64	4A1	
	11564	11655		72	4L4	
	11655	826		72+73	5B6	(4L0 @ HW)

LCP Compilation / including corrections

DDH FAGA069 (2 – 8)

Cyprus Anvil Mining Corp.

Lithologic Log

Date: June/83 Logged By: _____

Code	From	To	Recov.	No.	Unit	Description
1	10 14	16 20	22 24	26 28	30 34	35
L		113		1		0/B
L		353		2	5B8	
L		492		3	5D0	
L		629		4	5B8	
L		663		5	5D0	
L		1103		6	5B8	
L		1191		7	5B0	
L		1250		8	5B8	
L		1292		9	5B0	
L		1302		10	5D04	
L		1334		11	5B0	
L		1376		12	5B21	&9
L		1386		13	4D4	(4E4)? No core
L		1391		14	4C0	
L		1401		15	4A3	
L		1407		16	4D4	
L		1425		17	4C0	
L		1439		18	4A43	
L		1443		19	5C4	@
L		1512		20	4A4	&3
L		1530		21	4L0	
L		1591		22	4A1	(3G2)
L		1608		23	4L4	~~(5C4?)~~
L		1622		24	4D4	? No core
L		1627		25	4L2	
L		1684		26	4A1	&3 (4D0)
L		1689		27	5C4$	
L		1700		28	4A1	&4
L		1707		29	4L0	
L		1722		30	5B6	
L		2017		31	4A1	&4
L		2019		32	4A4	?? No core
L		2132		33	4D45	(4A3)(4C$) 70:30:Ar
L		2199		34	4K0	(5D4)
L		2202		35	4L0	
L		2214		36	4AD4	? No core

LCP Compilation / including corrections

DDH FAGA069 (2–8)

Cyprus Anvil Mining Corp.

Lithologic Log Date: June/81 Logged By: _____

Code	From	To	Recov.	No.	Unit	Description
1	10–14	16–20	22–24	26–28	30–34	35
L	2214	21221		317	5A19	
L		21225		318	4A4	
L		21229		319	5A196	
L		21238		410	4A4	(4D4) ? No core
L		21252		411	5A19	
L		21275		412	5B6	(4D4)
L		23101		413	5A19	(4A0)(4D4) minor
L		23113		414	4L6	
L		23122		415	4D4	?? No core
L		23160		416	4A1	8384 (4L0)
L		23177		417	5B64	(1090)
L		23194		418	4A14	(3G2)
L		24104		419	5B6	
L		24118		510	5B46	
L		24134		511	4A1	
		24148		512	5B46	
		24189		513	5B6	
		25109		514	5B8	
		25136		515	5D0	
		25855		516	5B6	
		26211		517	5B8	
		26334		518	4L6	
		26152		519	5B6	
		26172		610	4L6	
		26190		611	5B6	
		27101		612	5D6	
		27161		613	5B6	
		27185		614	5B8	
		29103		615	5B6	
		29112		616	5D0	
		30137		617	5B86	(5D0)(4L6)
		30146		618	4L7	(5C$)
		30151		619	4A1	
		30168		710	4G4#	
		30178		711	4E4	(5C$)
		30855		712	4G4#	

NEW LOG

LCP Compilation /including corrections

DDH FAGA069 (2–8)

Cyprus Anvil Mining Corp.

Lithologic Log

Page 3 of ____

Date: ____ Logged By: ____

Code	From	To	Recov.	No.	Unit	Description
1	10–14	16–20	22–24	26–28	30–34	35
L	3085	3094		73	4E4	(5D0)
		3098		74	4G4#	
		3124		75	4E4#	(4G4)
		3155		76	4E4	?? No core
		3203		77	4A1	8384
		3263		78	4A1	
		3331		79	5B6	
		3395		80	4L2	(5D6)
		3426		81	4C0	
		3441		82	5B6	(10Q0)
		3483		83	4L0	(10Q0)
		3493		84	5B6	
		3525		85	4L1	
		3552		86	4L4	(5D0)
		3605		87	5B6	
		3628		88	5B2	(4A4)
		3648		89	5A9	
		3655		90	5B6	
		3809		91	4L0	
		3843		92	5D0	(10Q0)
		3879		93	4L0	
		3891		94	5C0	
		3951		95	4L0	
		3981		96	5C1	
		3990		97	4L7	
		4040		98	5D0	
		4060		99	4L7	
		4071		100	5C0	
		4103		101	4L0	(5C0)

Cyprus Anvil Mining Corp.
Lithologic Log

Logged By: FN

From		Unit	Code	Description
	0	22 23	25 27	
317	0	11		o/B
159		12	5B8	gouge (fault?) 37-43 ft.; minor py blebs; abundant thin qtz layers; minor SDO from 81.0 - 86.4 ft.; 109.7 - 111.5 ft.; gouge from 72.5-73'; 97.4-97.6';
611	4	13	5D10	w/ minor qtz veins
0163		14	5B8	minor py blebs; gouge from 181.1 - 182.8, 185.8 - 187.0 ft;
1755		15	5D10	minor thin qtz veins
6120		16	5B8	incr. anketic staining from 356.9 - 362.0 ft; gouge from 231.8 - 233.0, at 236.7, 247.7 - 250.0; 253.0 - 254.7; numerous qtz veins, lenses & calcite fracture fillings
2106		17	5B10	thin qtz bands; minor calcareous fracture fillings
1102		18	5B8	gouge at 397.2 ft; minor qtz bands, calcite fracture fillings
2399		19	5B10	thin qtz - calcite (ankerite) veins & fracture fillings
2173		110	5D10⁴	altered & bleached; much ankerite staining (tan colour), qtz lenses, sericitic
3105		111	5B10	calcite fracture fillings; talcy; gouge at 427.6, 429.8, 431.4 - 431.8, 432.9 - 434.8 ft., and at 436.3 ft
5116		112	~~4A0~~ 5B2 1±4	slightly calcareous, qtz-calcite fracture fillings; minor py; sheared from 439.5 - 440.1 ft. and at 450.6 ft.
2774		113	~~4D3~~	minor graphitic layers from 456 - 459.5 ft.; 8% PbZn; 452 - 454.6 No core anvil met test 4D4 (4E4?) minor po; 454.6 - 456.5 4C0; 456.5 - 459.7 4A3; 459.7 - 461.5 4D4
7120		114	4A3	5% PbZn; py abundant; massive in places. (469.7 - 471.8 No core, met tests 4A4 3 High grade) 461.5 - 467.4 4C0
7136		115	5C4* ~~5D4~~	ank. marip. kaolinite highly altered; tan colour; w/ abundant maripsite;
1162		116	~~4A3~~ 10% PbZn; as ~~Unit 14~~	No! Higher grade 4A4 ±3
2120		117	~~4A1~~	less graphitic & more siliceous than Unit 16; 2% PbZn; gray qtz 496.2 - 502 4C0 + minor stks, minor phyllitic partings 502 - 522 4A1 phyll + C partings, +3G2 finely inter
3139		118	~~4D3~~	4% PbZn; minor sericite layers; altered
			~~5D1~~ (5C4*)	w/ maripsite at 526.6 ft. 522 - 527.7 4L4; 527.7 - 532.5 No core not test 4D4?; 532.1 - 533.9 4L2
5255		119	~~4A3~~	minor cpy in fracture at 535.9 ft; 4D4 536.2 - 537.8 ft.; 2% PbZn; rare cpy blebs scattered throughout unit [4A1 phyll + C partings ±3 (4D0)]
		120	5C4* ~~5D4~~	bleached white w/ abundant maripsite
5146		211	~~4A3~~	5% PbZn; red sph [4A1 phyllitic + C partings < ±4]
2102		212	4L0	minor py, sph; breccia at 558.7 - 559.3 ft.
6449		213	5B16	few qtz veins; minor py, sph, gal blebs;

DDH 75-A069 (2 — 8)

Cyprus Anvil Mining Corp.
Lithologic Log

Logged By: PN

Code	From	To	Unit	Code	Description
1	10 14	16 20	22 23	25 27	
L	5164 9	5171 0	214	4 A 10	564.9-680.1 4A1 phyllitic+carbon partings ±4 1% PbZn; gouge from 5696 - 5710 ft.;
L	5710	6996	215	4 A 11	diss. py, sph, gal in qtz bands & stringers; minor calcareous blebs; sheared 593-599 ft; 5% PbZn; more abundant massive sulphides from 692.0-699.6 ft (1.3% PbZn)
L	6996	7216 0	216	4 L D	highly calcareous in areas; (4K bands) 5% PbZn; 30% PbZn bed 722.5-726.3 ft; sericite-rich in areas; highly siliceous; minor po; well-banded sulphides below 714 ft; 4LO w/ minor py from 721.0-722.5 ft.
L	7216 0	7218 7	217	5 A 16 19	slightly calc w/ minor py, qtz-ankerite lenses;
L	7287	7311 4	218	4 A 4	4% PbZn
L	7311 4	7314 4	219	4 L 16	20% PbZn w/ 20% py; bleached white
L	7314 4	7318 9	310	4 A 10	1% py, negligible PbZn; numerous qtz-ankerite layers; very thin py layers
L	7389	7416 5	311	5 B 16	minor py bands, qtz bands; qtz vein 739.4-740.0 ft; light to med. grey; 4D4 from 744.8-744.9 ft; ~10% PbZn;
L	7416 5	7550	312	4 A 10	minor sph, gal in qtz layers; 4D4 from 751.1-751.6 ft (2% PbZn)
L	7550	7588	313	4 L 16	bleached white; minor py cubes diss. sph
L	7588	7714 3	314	4 A 4	16% PbZn bet. 758.8-761.9 ft; 5% PbZn below 761.9 ft.; minor calcite blebs; 4D4 bet. 764.6-765.0 ft (10% PbZn); 4LO from 770.2-770.7 ft;
L	7714 3	7810 0	315	4 L 16	large qtz veins from 777.6-777.9 ft; and 778.0-778.9 ft; numerous qtz lenses; thin graphitic layer at 775.6 ft; minor py & po blebs; thin ankerite layers
L	7810 0	7815 4	316	4 A 4	5% PbZn 4A14 phyllitic+C partings ± 3cm finely interlam
L	7815 4	7818 6	317	4 A 1	less graphite + more siliceous than unit 316; 1% PbZn
L	7886	7933 4	318	4 L 16	minor po-qtz bands; diss. py in fractures; talcy; 1% PbZn
L	7934	7986	319	4 A 4	2% PbZn 4A1 phyllitic low grade
L	7986	8030	410	4 L 16	minor po layers, ankerite blebs, gouge from 799.4-799.7 ft.; po-ankerite fracture fillings; thin qtz veins & blebs;
L	8030	8116 6	411	5 B 16	minor py, po, sph; qtz-ankerite fracture fillings; chlorite blebs assoc. w/ qtz veins;
L	8116 6	8233	412	5 B 18	ankerite fracture fillings; chloritic-po-qtz layers
L	8233	8320	413	5 D 10	w/ thin qtz-calcite layers; ankerite-qtz fracture fillings

CORRECTION → 3 units

CORRECTION → 3 units

CORRECTION

CORRECTION

CORRECTION → 2 units

CORRECTION

CORRECTION

CORRECTION → 2 units

CORRECTION →

CORRECTION

CORRECTION

CORRECTION

DDH ~~7[illegible]~~ - A069 (2 … 8)

Cyprus Anvil Mining Corp.
Lithologic Log

Logged By: PN

Code	From	To	Unit	Code	Description
1	10 14	16 20	22 23	25 27	
L	8320	8480	44	5B6	minor po, py blebs; 5D0 from 833.2-833.8 ft; 844.3-845.9 ft;
					thin qtz bands as well as thick qtz veins present; 0Q0 from
					835.2-837.0 ft; 838.3-839.6 ft., 841.5-844.4 ft;
L	8480	8599	45	5B8	minor py, po, sph blebs; few qtz veins & fracture fillings; 5B86
L	8599	8642	46	4L6	thin qtz-chlorite-po layers; 5B8 from 861.9-863.0 ft;
L	8642	8700	47	5B6	numerous qtz bands; 0Q0 from 867.2-868.3 ft, 869.5-
					869.8 ft; minor po, po, bt, ankerite
L	8700	8766	48	4L6	minor py, po, sph blebs; bt (?) layers;
L	8766	8827	49	5B6	minor gal, py; numerous qtz veins
L	8827	8860	50	5D6	altered 5D; tan colour w/ numerous qtz-ankerite lenses;
					minor py, ankeritic fracture fillings; grades into 4L0
					at 884.8 ft
L	8860	9060	51	5B6	minor py; numerous qtz-ankerite fracture fillings; few
					po bands; gouge from 905-906 ft;
L	9060	9138	52	5B8	numerous qtz veins w/ po blebs; 5D0 from 908.6-908.9,
					909.6-911.0, 913-913.8 ft; 5B86
L	9138	9525	53	5B6	numerous qtz-ankerite bands & py stringers, 5D0 from 914.9-915.1,
					915.5-915.9, 916.5-917.2, 919.8-920.5 ft.; sheared 922-
					923 ft.; qtz-po rich from 924.8-927.0 ft.;
					sheared 942-943 ft; more chloritic towards 952.5 ft
L	9525	9553	54	5D0	w/ thin qtz-calcite bands
L	9553	9965	55	5B8	5B86; qtz-calcite lenses; minor graphite increases w/
					depth; 4L6 from 972.1-973.0; 974-974.5 ft; 5D0 from
					969-970.3 ft.; 970.9-971.6 ft.; 981.5-982.0; 982.8-
					983.5 ft.; 990.4-991.2 ft.; 5A6 bet 995.2-995.6 ft;
rection L	9965	9992	56	4L~~6~~	4L7 (5C*mot)@f.w. minor py-po-qtz bands; 4A0 997.9-998.2 ft; mottled
					5D6 w/ lenses of chlorite & calcite
Correction L	9992	10010	57	4A~~4~~	2% PbZn; 10% Py; 4A1 phyllitic + C partings low grade
L	10010	10065	58	4G4	~~10~~ 13% PbZn; calcareous 4G4*cc very minor thin mariposite parting
L	10065	10100	59	4E~~0~~	~~2%~~ PbZn; minor cpy; mottled 5~~D0~~ C* from 1006.7-1007.4 ft; 4E4
L	10100	10120	60	4G4	* as unit 58
L	10120	10151	61	4E~~0~~	minor PbZn ~~(1%)~~ 4E4; 5D0 from 1012.6-1012.8 ft, 1014.0-1014.5
					ft;
L	10151	10165	62	4G4	* ~~5%~~ PbZn; 1016.5-1025
ORRECTION 2 units L	10165	10352	63	~~4K6~~	10% PbZn; minor barite 4E4*cc (4G4) (ank spots)
L	10352	10707	64	4A4	3% PbZn 1025-1034.5 No core met tests 4E4 ?

2 units

1035.2-1051 4A1 ± 3 ± 4
1051-1070.7 4A1 } mostly C partings

DDH 75-AD69 (2 8)

Cyprus Anvil Mining Corp.

Lithologic Log

Logged By: PN

Code	From	To	Unit	Code	Description
1	10 14	16 20	22 23	25 27	
L	1070 7	1092 9	65	5B6	minor py stringers, qtz lenses; 4L0 from 1092.9-1071.6 ft;
L	1092 9	1114 0	66	4L2	5D6 from 1092.9-1095.6 ft; 1% PbZn; highly siliceous from
					1110.2-1114 ft; 5D0 breccia w/ py matrix 1113.6-1114 ft;
L	1114 0	1124 0	67	4C0	minor graphite; brecciated w/ py, qtz & phyllite clasts;
					calcite fracture fillings;
L	1124 0	1129 0	68	5B6	OQO from 1125-1126.4 ft.; minor py blebs & stringers;
					medium grey
L	1129 0	1142 6	69	4L0	siliceous from 1129-1134 ft; minor chlorite gives sericite
					a light green colour; OQO from 1135.7-1136.2 ft; 1136.5-
					1137.3 ft; py stringers; massive py w/ po blebs 1137.8-
					1138.0 ft;
L	1142 6	1145 9	70	5B6	py stringers w/ po blebs
L	1145 9	1156 4	71	4L1	py bands & stringers; calcite fracture fillings; less
					siliceous from 1152-1156.4 ft; minor graphite from 1155.8-
					1156.4 ft
L	1156 4	1165 5 ~~1167 2~~	72	4LH	po-rich w/ py & lesser gal, sph; clasts of sericite
					& qtz; variably calcareous; 5D0 from 1161-1161.3 ft;
					1162-1162.5 ft., 1164.1-1164.6 ft.; 1165.6-1167.2 ft;
L	1165 5 ~~1167 2~~	1182 6	73	5B6	light grey w/ chloritic & py layers; from 1167.2-1175 ft;
					med. grey w/ qtz veins & <1% PbZn from 1175-1182.6
					ft.; minor po & chl. bands 4L0[5B4] @ 7 ft H.W
L	1182 6	1190 2	74	5B2	4A4 from 85.5-87.0 ft; minor chlorite bands,
L	1190 2	1196 9	75	5A9	minor qtz veins, py bands, noncalcareous
L	1196 9	1199 1	76	5B6	w/ qtz-ankerite lenses, py, gal & po blebs; noncalcareous
L	1199 1	1249 7	77	4L0	minor py, po layers, gal. blebs, mariposite; scattered qtz-
					ankerite lenses; 1201.8-1204 ft. abundant bt, chlorite,
					calcite & qtz bands, generally dk. brown colour;
					increase in bt, chl bands bet. 1204-1222.4 ft;
					5% PbZn (mainly gal.) from 1241-1242 ft;
L	1249 7	1260 7	78	5D0	OQO 1250.5-1251.1 ft.; variable bt content
L	1260 7	1272 6	79	4L0	OQO 1268.3-1268.7 ft., plus smaller minor qtz bands;
					bt-rich 5D0 from 1262.5-1262.8 ft.; chlorite &
					bt-rich from 1269.3-1272 ft.;
L	1272 6	1276 5	80	5C0	mot mottled; ankerite-qtz bands interlayered w/
					chlorite
L	1276 5	1296 4	81	4L0	py, po blebs & fracture fillings; py-po-qtz bands

DDH 75-A069

Cyprus Anvil Mining Corp.
Lithologic Log

Logged By: PN

Code	From	To	Unit	Code	Description
1	10 14	16 20	22 23	25 27	
					throughout; 1281.6–1282.2 massive py-po overlying
					sph bands in 4LO.
L	12964	13062	82	5~~D~~C1	mot generally mottled, although normally laminated in places; numerous
					qtz bands throughout; minor py blebs
L	13062	13090	83	4L7	po-py-rich band bet. 1306.0-1306.2 ft.; py-po
					stringers & fractures & as thin layers; calcite fracture
					fillings; minor mariposite; minor cpy;
L	13090	13255	84	5D0	1309–1313.7 ft abundant thin qtz bands interlayered w/
					chloritic layers; minor qtz veins; thin py, po bands;
					minor 4LO 1318–1318.8 ft;
L	13255	13320	85	4L7	po w/ lesser py, cpy in fractures; more chloritic bet 1330.8–
					1332.0 where grading down into 5D
L	13320	13356	86	5~~D~~C0	mot mottled 5D interlayered w/ more massive 5D; minor gal,
					py, po blebs.
L	13356	13460	87	4L0	po-rich band 1330.9–1331 ft.; minor py, po, sph, cpy
					bands; mottled 5D0 w/ mariposite 1337.9–1340.2 ft; 4A3
					w/ po 1342.5–1342.7 ft.; mottled 5D0 1443.4–1444.7
					ft; chloritic 4L from 1444.7 to EOH
		EOH			

Cyprus Anvil Mining Corp.

Structural Log

Logged By: PN

D	Feature 22–24	Sym 26	S_1 Dip Direct. 28–32	S_2 Dip Direct. 34–38	Description
					0-37 ft. O/B
40	CSR			710 2310	
30	FR	3		613	S sym. 63.0 - 87.2 ft.
35	CSR			5A 2310	
19	CSR			618 2310	
72	FR	E			E sym. 87.2 - 88.9 ft.
89	FR	3			S sym. 88.9 - 135.4 ft.; D from
					101.8 - 103.5 ft., and at 118.5 & at
					131.6 ft; F4 at 109.6, 126.9 & at 127.6 ft;
30	CSR			714 2310	
26	CSR			715 2310	
34	FR	E			E sym. 135.4 - 137.4 ft.
74	FR	3			S sym. 137.4 - 262.8 ft.; F4 at
					141.8, 149.6, 205.1, 209.6, 223.3,
					226.6, 260.4 & 261.8 ft; D zones
					at 154.2, 165.3, 177.1, 194.2 - 194.8,
					at 195.8, 205.6, 209.9, 219.9 - 221.4,
					225.3 & at 258.8 ft
0	CSR			810 2310	
42	CSR			711 2310	
34	CSR			77 2310	
9	CSR			714 2310	
0	CBR			712 2310	
5	CFR			68 2310	
6	CFR			70 2310	
8	FRS				D region 262.8 - 292.6 ft.; minor
					S zones 267.2 - 267.6, 276.0 - 276.5,
					277.2 - 278.0, 282.9 - 283.3 & at
					285.8 ft.;
2	CFR			716 2310	
6	FRD				S sym. 292.6 - 323.3 ft; minor
					D at 305.2 ft & 321.8 ft; E sym at
					293.2 ft.;
5	SR			81 2310	
5	CSR			717 2310	
3	FRS				D region 323.3 - 337.7 ft.; S3 at

DDH 75-A069 (2 / 8)

Cyprus Anvil Mining Corp.
Structural Log

Logged By: PN

Code	From	To	Feature	Sym	S_1 Dip Direct.	S_2 Dip Direct.	Description
1	10 14	16 20	22 24	26	28 32	34 38	
							324.0 ft;
S		338.2	CS2			78 230	
S		337.7	F2D				S sym 337.7-451.6ft; minor
							D regions at 353.0ft, 366.6, 395.5,
							401.9, & from 419.7-420.4ft.; minor
							P at 373.9ft;
S		351.8	CS2			87 230	
S		377.6	CS2			84 230	
S		391.8	CS2			81 230	
S		404.0	CS2			79 230	
S		423.0	CS2			74 230	
S		438.8	CS2			78 230	
S		451.6	F2S				R region 451.6-496.2ft;
							massive sulphides w/ highly altered SDO
							from 472.0-473.4ft;
S		456.3	PS2			510 230	
S		472.8	PS2			519 230	
S		496.2	F2R				M region 496.2-522.0ft; S3
							at 506.4, 512.5ft; ambiguous symmetry
							from 513-522ft; S/Z approx.
							50/50.
S		498.1	CS2			618 230	
S		511.0	CS2			717 230	
S		522.0	F2M				R region 522.0-557.6ft.; massive
							sulphides including 4A w/ ambiguous
							symmetry
S		538.0	PS2			53 230	
S		557.6	F2R				Z sym. 557.6-564.9ft; ambiguous
							region since few symmetry determinations
							made
S		561.2	CS2			716 230	
S		564.9	F2Z				R region 564.9-726.0ft; massive sulphides;
S		726.0	F2R				Z sym. 726.0-741.1ft.; minor S sym.
							at 736.0ft.;
S		728.6	CS2			72 230	
S		741.1	F23				S sym. 741.1-1001.4ft; D at 832.7,

DDH 75-A-069 (2 / 8)

Cyprus Anvil Mining Corp.
Structural Log

Logged By: PN

Code	From	To	Feature	Sym	S_1 Dip Direct.	S_2 Dip Direct.	Description
1	10 14	16 20	22 24	26	28 32	34 38	
							865.8, & 979.5 ft; F4 at 939.6ft; F3 at 986.7 ft; min R at 817.0 ft; min Z at 986.4 ft;
S		7147	C S2			73 2310	
S		7568	C S2			71 2310	
S		7715	4 C S2			616 2310	
S		7897	C S2			714 2310	
S		8110	0 C S2			710 2310	
S		8276	C S2			719 2310	
S		8470	C S2			616 2310	
S		8640	C S2			618 2310	
S		8868	C S2			810 2310	
S		9081	C S2			717 2310	
S		9289	C S2			615 2310	
S		9487	C S2			717 2310	
S		9682	C S2			718 2310	
S		9879	C S2			716 2310	
S		9998	C S2			814 2310	
S		10011	4 F2 S				R region 1001.4 – 1035.2 ft; massive sulphides;
S		10352	F2 R				S sym. 1035.2 – 1114.0 ft.; D at 1081.5 ft; F4 at 1081.1, 1082.8 ft;
S		10595	C S2			615 2310	
S		10758	C S2			715 2310	
S		10947	C S2			716 2310	
S		11064	C S2			711 2310	
S		11140	F2 S				R region 1114.0 – 1124.0 ft; massive sulph.
S		11240	F2 R				S sym. 1124.0 – 1156.4 ft; D from 1128.2 – 1128.7 ft, and at 1148.1 ft;
S		11285	C S2			718 2310	
S		11487	C S2			714 2310	
S		11564	F2 S				R region 1156.4 – 1165.6 ft; mainly massive sulphides & 15% non sulphide bearing rock.
S		11656	F2 R				S sym. 1165.6 – 1311.0 ft; D at 1203.2 ft; ambiguous from 1287 – 1311 ft;

DDH 75-A069 (2 / 8)

Cyprus Anvil Mining Corp.
Structural Log

Logged By: PN

Code	From	To	Feature	Sym	S_1 Dip Direct.	S_2 Dip Direct.	Description
1	10 14	16 20	22 24	26	28 32	34 38	
S		1117101	CSZ			8P 2310	
S		1119115	CSZ			7P 2310	
S		1210183	CSZ			718 2310	
S		1212190	CSZ			77 2310	
S		1248 2	CSZ			77 2310	
S		1270 3	CSZ			811 2310	
S		1291 0 7	CSZ			718 2310	
S		1310 7 0	CSZ			610 2310	
S		1311 1 0	FZ	E			Z Sym. 1311.0 – 1313.1 ft;
S		1313 1	FZ	3			S Sym. 1313.1 – 1346.0 ft; entire
							region ambiguous since few symmetry
							determinations obtained;
S		1321 6 0	CSZ			715 2310	
S		1341 0 0	CSZ			710 2310	
		EOH					

DDH FAGA069 (2 Feet 8)

Cyprus Anvil Mining Corp.

Structural Log

Page _____ of _____

Date: _____ Logged By: _____

Code	From	To	Feature	Sym	S_0 Dip Direct.	S_1 Dip Direct.	S_2 Dip Direct	Description
1	10 14	16 20	22 24	26	28 32	34 38	40 44	
F	1370	1430	G					gouge
F	1725	1730	G					"
F	1974	1976	G					"
F	1811	1828	G					"
F	1858	1870	G					"
F	2318	2330	G					"
F		2367	G					"
F	2417	2500	G					"
F	2530	2547	G					"
F		3972	G					"
F	4127	4365	1GB		74006		78006	broken core & S_2 // maj gouge
F	4399	4401	S					sheared
F		4506	S					"
F	5587	5593	X					bxia
F	5696	5710	G					gouge
F	5930	5990	S					sheared
F	9050	9060	G					gouge
F	9220	9230	S					sheared
F	9420	9430	S					"
F	11140	11240	MF?	1				400 bxia w/ cc frac. fillings
F		7995	G					
F	10718	10929	1XQ					
F	10970	11140	3BQ					
F		11520	1G					
F	11940	11965	B1G					

DDH 75-A069

Cyprus Anvil Mining Corp.
Geochemical Log (Sampler's Copy)

Logged By: PN

Sampled By:

Code	From	To	Sample No.	Description			
1	10 14	16 20	22 27		LENGTH	REC.	UNIT
P	14520	14546	113513	K.A.	2.6	2.6	4D3
P	14546	14599	113514	K.A.	5.3	5.3	4D3
P	14599	14624	113515	K.A.	2.5	2.5	4D3
P	14624	14697	113516	K.A.	7.3	7.3	4D3/4A3
P	14697	14711	113517	K.A.	2.1	2.1	4A3
P	14734	14810	113518	K.A.	7.6	7.6	4A3
P	14810	14850	113519	K.A.	4.0	4.0	4A3
P	14850	14900	113610	K.A.	5.0	5.0	4A3
P	14900	14951	113611	KA	5.1	5.1	4A3
P	14951	14964	113612	KA	1.3	1.3	4A3/4A1
P	15113	15210	113613	K.A.	7.5	7.5	4A1
P	15210	15277	113614	KA	6.7	6.7	4A1/4D3
P	15277	15325	113615	KA	4.8	4.6	4D3
P	15325	15410	113712	KA	7.5	7.5	4D3/4A3
P	15410	15511	113616	KA	11.4	11.4	4A3
P	15511	15569	113617	K.A.	5.5	5.3	4A3/5D0/4A3
P	15516	15588	113618	KA	1.9		4A3/4L0
P	15614	15658	113716	KA	1.0	1.0	4A0
P	15658	15750	113713	K.A.	9.2	7.6	4A0/4A1
P	15750	15811	113714	KA	6.5	6.0	4A1
P	15811	15881	113715	KA	6.6	6.5	4A1
P	15881	15930	113717	KA	4.9	3.8	4A1
P	15930	15987	113718	KA	5.7	2.5	4A1
P	15987	16090	113719	KA	10.3	9.7	4A1
P	16090	16127	113810	KA	3.7	3.7	4A1
P	16127	16160	113619	KA	3.3	3.3	4A1
P	16160	16220	113710	KA	6.0	6.0	4A1
P	16220	16260	113711	KA	4.0	4.0	4A1
P	16260	16283	113811	KA	2.3	2.3	4A1
P	16283	16320	113812	KA	3.7	3.3	4A1
P	16320	16382	113813	KA	6.2	4.6	4A1
P	16382	16435	113814	KA	5.3	4.9	4A1
P	16435	16510	113815	KA	7.0	5.2	4A1
P	16510	16580	113816	KA	7.5	7.5	4A1
P	16580	16615	113817	K.A.	7.0	6.0	4A1
P	16615	16711	113818	KA	6.0	6.0	4A1

DDH 75-A069 (2 / 8)

Cyprus Anvil Mining Corp.
Geochemical Log (Sampler's Copy)

Logged By: _____

Sampled By: _____

Code	From	To	Sample No.	Description			
1	10 14	16 20	22 27		LENGTH	REC.	UNIT
P	16711 0	16716 1	113819	KA	5.1	5.1	4A1
P	16716 1	16810 1	113910	KA	4.0	4.0	4A1
P	16810 1	16865	113911	KA	6.4	6.0	4A1
P	16865	16920	113912	KA	5.5	5.1	4A1
P	16920	16996	113913	KA	7.6	7.6	4A1
P	16996	17020	113914	KA	2.4	1.5	4LD
P	17020	17058	113915	KA	3.8	2.0	4LD
P	17058	17083	113916	KA	2.5	2.5	4LD
P	17083	17122	113917	KA	3.9	3.9	4LD
P	17122	17143	113918	KA	2.1	2.1	4LD
P	17143	17180	113919	KA	3.7	3.3	4LD
P	17180	17216	114010	KA	3.6	3.6	4LD
P	17212 5	17216 3	116011	KA	3.8	2.9	4LD
P	17218 7	17310 1	116012	KA	1.4	1.3	4A4
P	17311 4	17314 4	116013	KA	3.0	2.8	4L6
P	17510 5	17511 5	116014	KA	1.0	0.9	4A0
P	17518 8	17611 9	116015	KA	3.1	3.1	4A4
P	17611 9	17687	116016	KA	6.8	6.8	4A4
P	17687	17720	116017	KA	3.3	3.2	4A4
P	17720	17743	116018	KA	2.3	2.3	4A4
P	17810 0	17853	116019	KA	5.3	5.3	4A4
P	17853	17891	116110	KA	3.8	3.8	4A1 / 4L6
P	17930	17988	116111	KA	5.8	5.8	4L6 / 4L4
P	19919 5	10100 5 0	116112	KA	5.5	5.5	4A4 / 4G4
P	10100 5 0	10115 0	116113	KA	10.0	10.0	4G4 / 4E0
P	10115 0	10215 0	116114	KA	10.0	10.0	4G4 / 4K6
P	10215 0	10310 0	116115	KA	6.0	6.0	4K6
P	10310 0	10314 5	116116	KA	3.5	3.5	4K6
P	10314 5	10316 7	116117	KA	2.2	2.2	4K6 / 4A4
P	10316 7	10319 5	116118	KA	2.8	2.8	4A4
P	10319 5	10414 3	116119	KA	4.8	4.8	4A4
P	10414 3	10510 0	116210	KA	6.7	6.7	4A4
P	10510 0	10516 8	116211	KA	5.8	5.8	4A4
P	10516 8	10620 0	116212	KA	5.2	5.2	4A4
P	10620 0	10695 0	116213	KA	7.5	6.5	4A4
P	10695 0	10714	116214	KA	1.9	1.9	4A4

DDH 75-A-069 (2 / 8)

Cyprus Anvil Mining Corp.
Geochemical Log (Sampler's Copy)

Logged By: PW

Sampled By:

Code	From	To	Sample No.	Description			
1	10 14	16 20	22 27		LENGTH	REC.	UNIT
P	1 1 0 9 8 7	1 1 1 0 5 5	1 1 6 2 1 5	KA	6.8	6.4	4L2
P	1 1 1 1 4 0	1 1 2 1 4 0	1 1 6 2 1 6	KA	10.0	1.5	4C0
P	1 1 5 1 1 0	1 1 5 1 5 7	1 1 6 2 1 7	KA	4.7	4.5	4L1
P	1 1 5 1 5 7	1 1 6 1 4 3	1 1 6 2 1 8	KA	8.6	8.0	4L1/4LH
P	1 1 6 1 4 3	1 1 6 5 5	1 1 6 2 1 9	KA	1.2	1.2	4LH

Logged 1980, Checked for sampling 1981

DDH 75-A069 Cyprus Anvil Mining Corp

Page ____ of ____

Logged by PN / Checked JSM

ASSAY LOG (SAMPLER'S COPY) Date 8/81 Sampled by ____

CODE	FROM	TO	SAMPLE	INTR.	REC (m)	UNIT	DESCRIPTION	
1	10 14	16 20	22 26	28 30	32 34	36 40	42	
P	4520	4546	911022	26	26	4D4	No core. Met test KA (4E4?) Kerr Add 1353	1
P	4546	4565	8359	19	19	4C0		1
P	4565	4597	8360	32	32	4A3		2
P	4597	4615	8361	18	18	4D4		3
P	4615	4674	8362	59	55	4C0		4
P	4674	4720	8363	46	40	4A3	(469.7-471.8 whole core sampled met test KA) → (4A43?)	5
P	4720	4734	----			5C4*	No sample 0%	
P	4734	4810	8364	76	72	4A4 ± 3		6
P	4810	4867	8365	57	57	4A4 ± 3		
P	4867	4900	8366	33	33	4A4 ± 3		
P	4900	4962	8367	62	62	4A4 ± 3		
P	4962	5020	8368	58	58	4L0		7
P	5020	5080	8369	60	60	4A1		8
P	5080	5153	8370	73	73	4A1		
P	5153	5220	8371	67	67	4A1		
P	5220	5274	8372	54	54	4L1		8A
P	5274	5321	911023	47	—	4D4?	KA (note KA measured it slightly diff) Kerr Add -1365	
P	5321	5339	8373	18	18	4L2		9
P	5339	5407	8374	68	68	4A1	±3 (4D0)	10
P	5407	5470	8375	63	63	4A1	±3 (4D0)	
P	5470	5525	8376	55	55	4A1	±3 (4D0)	
P	5525	5541	8377	16	14	5C4*		11
P	5541	5576	8378	35	35	4A1	±4	12
P	5576	5602	8379	26	26	4L0		13
P	5602	5649	----	47	—	5B6	No sample recorded 0%	
P	5649	5710	8380	61	60	4A1	±4	14
P	5710	5770	8381	60	60			
P	5770	5825	8382	55	55			
P	5825	5881	8383	56	56			
P	5881	5942	8384	61	61			
P	5942	6020	8385	78	60			
P	6020	6062	8386	42	42			
P	6062	6127	8387	65	60			
P	6127	6190	8388	63	60			
P	6190	6240	8389	50	50			
P	6240	6290	8390	50	50			

C.A.M.C. 1981 - E - 5

Note: TTC sample #'s do not correspond to unit #'s due to so many corrections

DDH 75-A069 (2 / 8) Cyprus Anvil Mining Corp Page ____ of ____

ASSAY LOG (SAMPLER'S COPY) Date ____ Logged by ____ Sampled by ____

CODE	FROM	TO	SAMPLE	INTR.	REC (m)	UNIT	DESCRIPTION
1	10 14	16 20	22 26	28 30	32 34	36 40	42
P	61290	61358	83911	62	60		KERR ADD.
P	61358	61436	83912	78	72		
P	61436	61500	83913	64	64		
P	61500	61567	83914	67	67		
P	61567	61630	83915	63	63		
P	61630	61695	83916	65	65		
P	61695	61748	83917	53	53		
P	61748	61801	83918	53	53		↓
P	61801	61865	911024	64	60	4A4	? KA sample# not test #1391
P	61865	61930	83919	65	65	4D45	(4A3)(4C*)
P	61930	61996	84010	66	66	4D45	(4A3)(4C*)
P	61996	70800	79511	89	76	4K101	(5D4)
P	70800	71147	79512	67	67		
P	71147	72115	79513	68	68		↓
P	72115	72125		10		4L01	No sample 090
P	72125	72163	911025	38	29	4AD4	? KA sample# not test #1601
P	72163	72187		24	15	5A119	No sample 090.
P	72187	73101	79514	14	14	4A44	
P	73101	73114		13		5A119	No sample 090
P	73114	73444	911026	30	28	4A44	(4D4 sericitic) ??? KA # #1603, not test
P	75188	76191	911027	31	31	4DH1	sericitic? KA# not test #1605
P	76191	76681	79555	70	70	4A11	±3 ±4 (4L0)
P	76681	77443	79573	62	62		
P	77443	78100				5B614	No sample, record as 090
P	78100	78554	79556	54	54	4A14	+3G2
P	78554	78866	79557	32	32	5B61	(minor sfds)
P	78866	79134				5B14	no sample record as 090
P	79134	79186	79558	52	52	4A11	phyll
P	99902	101010	79559	18	18	4A1	
P	10101	100655	79560	55	55	4G4*	cc
P	100655	101000	79561	35	30	4E4	
P	101000	101120	79562	20	18	4G4*	
P	101120	101151	79563	31	30	4E4	
P	101151	101165	79564	14	14	4G4*	
P	101165	101195	79565	30	30	4E4*	cc (4G4)

15 16 17 18 19 20 21 22 23 24 25 26 27 28

C.A.M.C. 1981 - E - 5

DDH 75-A069 Cyprus Anvil Mining Corp

Page _____ of _____

Logged by _____

ASSAY LOG (SAMPLER'S COPY) Date _____ Sampled by _____

CODE	FROM	TO	SAMPLE	INTR.	REC (m)	UNIT	DESCRIPTION
1	10 14	16 20	22 26	28 30	32 34	36 40	42
P	10195	10250	79666	55	55	4E4*	cc (4G4
P	10250	10310	9110288	10	10	4E4	KA sample# not test 1614
P	10310	10345	9110666	60	60	4E4	" 1615
P	10352	10410	79667	68	62	4A1	± 3 ± 4 Note
P	10410	10510	79668	100	100	4A1	± 3 ± 4 1034.5-1035.2 not taken by not test
P	10510	10602	79669	92	92	4A1	
P	10602	10707	79670	105	105	4A1	but incl in that 5th interval so not sampled
P	11564	11610	79671	46	46	4L4	
P	11610	11655	79672	45	43	4L4	

C.A.M.C. 1981 - E - 5